NANUK™

PROFESSIONAL PROTECTIVE CASES

THE FUTURE OF PROTECTION CASES

Tough yet stylish.

Durable and elegant.

Easily customizable.

Endless possibilities abound.

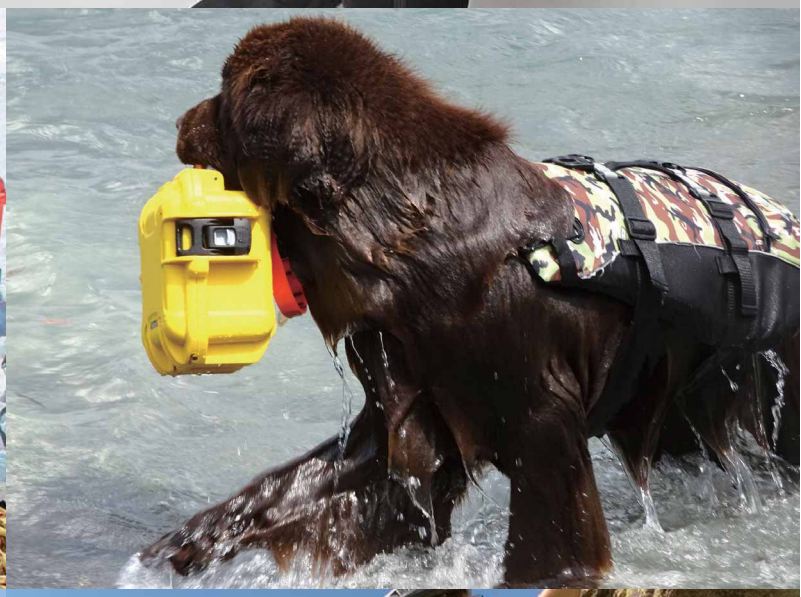

OUTDOOR

MEASUREMENT
KEEPING YOU IN CHARGE

DRONE

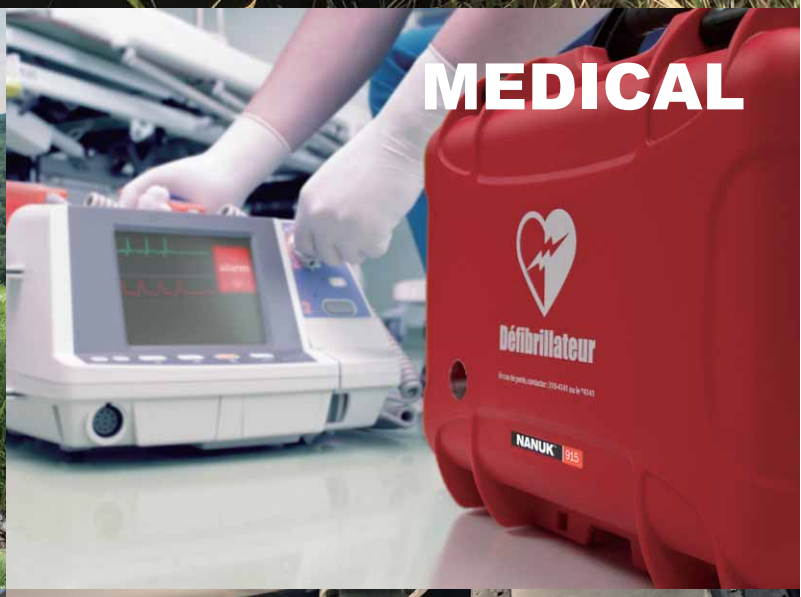
MEDICAL
Défibrillateur
NANUK 915

TRANSPORT

DEFENCE

TAKACHI

NANUK™ THE NANUK ADVANTAGE

IP65 PROTECTION CLASS

IP65 protection class for use in various environments.
Equipped with durable and weather resistant EPDM gasket.
Waterproof pressure relief valve enables pressure within the case to be equalized with the surrounding, allowing it to be opened with ease, while keeping it waterproof.

IMPACT RESISTANT-NK-7 RESIN

Impact resistant, lightweight, and armed with reinforced PP, NK-7 resin body.
Keep your items safe from impact damage.

24 DIFFERENT SIZES

A large selection of 24 different sizes, ranging from small (232 x 173 x 97mm) to large (1,196 x 439 x 168mm) types.

PROTECTIVE SPONGE FOAM

Nanuk cases are also available with a protective sponge foam.

Sponge foam are fitted to the case, and can also be purchased as separate option (NKSP series).

NKSP sponge foam comes with pre-cubed foam to allow for easy modification by removing the required squares.

(※No pre-cubed foam available for NKSP990).

Sponge customization is also available.

(See page SP-Custom-1～SP-Custom-2)

POWERCLAW LATCHING SYSTEM and SOFT GRIP HANDLE

※Latch with TSA lock on NKK series

NANUK's patented PowerClaw latching system uses compressive force to keep your case tightly clamped.

Integrated slide lock offers added security, preventing it from accidental opening during transport or when dropped.

NANUK's TPE soft grip handle makes carrying not only comfortable, but also convenient.

Handle can be folded down to be flushed with the case when not in use.

100% STAINLESS STEEL PARTS

Metallic parts are made from SUS304 stainless steel.

Suitable to be used in environments with water splashes and so on.

OPTIONAL ALUMINIUM PANEL for YOUR DEVICE

Optional aluminium panel can make NANUK into your original controller, measuring device or transmitter.

See page NKAP-1 for the details of optional aluminium panel.

NKAP panel customization is available. (See NKAP-2 for more details).

●CUSTOMIZATAION on ALUMINIUM PANEL

CUSTOMIZE

NK series WATERPROOF PROTECTOR CASE

NEW SIZE

- Durable and stylishly designed waterproof carrying case.
- A total of 23 different sizes available without foam, and 20 sizes with foam.
- Suitable for storing electronics and delicate devices such as measuring device, camera broadcasting device, electric tool, medical equipment, and so on.
- Optional aluminium panel can turn the NK series into your own original controller, measuring device or transmitter.

IP65

Technical Data
Protection class : IP65 Operating temperature : -20℃～+60℃

Hinge pin shape varies based on model type

Components

No.	Part name	Material
1	Cover・Base	Reinforced PP (NK-7)
2	Latch	Nylon 66
3	Handle grip	Elastomer
4	Pressure release valve (※1)	Nylon 66・PTFE

No.	Part name	Material
5	Hinge pin	Stainless steel
6	Gasket	EPDM
7	Foam	Polyurethane / 12.7mm Pitch Pre-cut cubed foam (※2)

※1 Pressure release value automatically enables pressure within the case to be equalized with the surrounding, allowing it to be opened with ease, while keeping it waterproof.

※2 Pitch of Pre-cut cubed foam for NK940, 945, and 950 models is 15mm.

Accessories (Optional parts)

Divider DVI series
See page NANUK-ACC-1

Aluminium panel NKAP series
See page NKAP-1 ~ NKAP-2

Shoulder strap NSTP series
See page NANUK-ACC-3

Padlock AB145S series
See page NANUK-ACC-3

Nameplate sticker NKST
See page NANUK-ACC-3

■ With and Without-foam types are available.

Without-foam Type

With-foam Type

※See page NANUK-ACC-2 pages for optional NKSP foam.

NK dimensions

■ DXF/DWG/PDF drawings available on our website.

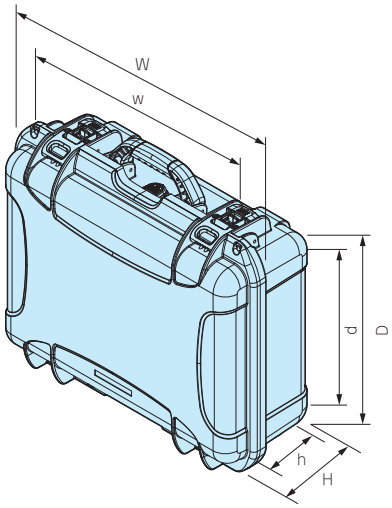

Product no. / Details

■Without-foam type

Product no.		External dimensions			Internal dimensions			Hinge removal	Weight (kg)
● Black	● Yellow	W	D	H	w	d	h		
NK903B	NK903Y	232	173	97	176	113	79	—	0.6
NK904B	NK904Y	259	200	114	198	134	96	—	0.7
NK905B	NK905Y	316	257	152	209	146	129	—	1.6
NK908B	NK908Y	318	249	203	203	134	180	—	1.5
NK909B	NK909Y	321	230	110	265	138	83	—	1.0
NK910B	NK910Y	363	284	121	307	193	98	—	1.4
NK915B	NK915Y	391	309	172	305	179	146	○	2.1
NK918B	NK918Y	425	326	232	332	178	207	○	2.9
NK920B	NK920Y	424	342	172	338	211	146	○	2.4
NK923B	NK923Y	471	364	161	383	222	123	○	2.7
NK925B	NK925Y	474	373	178	387	242	151	○	2.9
NK930B	NK930Y	500	405	191	412	274	164	○	3.4
NK933B	NK933Y	503	408	255	408	258	226	○	3.9
NK935B	NK935Y	560	355	229	416	231	179	○	5.3
NK938B	NK938Y	605	395	336	440	239	283	○	6.4
NK940B	NK940Y	551	430	216	460	296	189	○	3.9
NK945B	NK945Y	648	508	222	511	359	195	○	5.0
NK950B	NK950Y	581	464	298	416	316	247	○	7.0
NK960B	—	646	509	368	466	356	316	○	9.0
NK963B	—	825	536	317	627	373	257	○	10.2
NK970B	—	700	697	410	523	493	334	○	11.9
NK975B	—	844	612	501	685	439	435	○	14.6
NEW NK980B	—	760	409	186	635	276	142	○	4.9

■With-foam type

Product no.		External dimensions			Internal dimensions			Weight (kg)
● Black	● Yellow	W	D	H	w	d	h	
NK903BS	NK903YS	232	173	97	176	113	79	0.63
NK904BS	NK904YS	259	200	114	198	134	96	0.81
NK905BS	NK905YS	316	257	152	209	146	129	1.7
NK908BS	NK908YS	318	249	203	203	134	180	1.7
NK909BS	NK909YS	321	230	110	265	138	83	1.2
NK910BS	NK910YS	363	284	121	307	193	98	1.5
NK915BS	NK915YS	391	309	172	305	179	146	2.4
NK918BS	NK918YS	425	326	232	332	178	207	2.9
NK920BS	NK920YS	424	342	172	338	211	146	2.7
NK923BS	NK923YS	471	364	161	383	222	123	3.1
NK925BS	NK925YS	474	373	178	387	242	151	3.3
NK930BS	NK930YS	500	405	191	412	274	164	3.9
NK933BS	NK933YS	503	408	255	408	258	226	4.6
NK935BS	NK935YS	560	355	229	416	231	179	6.0
NK938BS	NK938YS	605	395	336	440	239	283	7.1
NK940BS	NK940YS	551	430	216	460	296	189	4.6
NK945BS	NK945YS	648	508	222	511	359	195	6.0
NK950BS	NK950YS	581	464	298	416	316	247	8.0
NK960BS	—	646	509	368	466	356	316	10.5
NEW NK980BS	—	760	409	186	635	276	142	5.5

NKK series PROTECTOR CASE with LOCK

NEW SIZE

- Equipped with a TSA lock latch for security, or transportation as check-in baggage.
- A total of 18 different sizes available without foam, and 17 sizes available with foam.
- Optional aluminium panel can turn the NK series into your own original controller, measuring device or transmitter.

IP65

Technical Data
Protection class : IP65 Operating temperature : -20℃～+60℃

Latch with TSA lock

2 Keys included.

What is TSA LOCK?

TSA LOCK is a global security system which allows passengers to lock their luggage, while at the same time, permitting security authorities to inspect them without damage to the lock or luggage.

TRAVEL SENTRY® APPROVED

Accessories (Optional parts)

Divider DVI series
See page NANUK-ACC-1

Aluminium panel NKAP series
See page NKAP-1 ~ NKAP-2

Shoulder strap NSTP series
See page NANUK-ACC-3

Nameplate sticker NKST
See page NANUK-ACC-3

Hinge pin shape varies based on model type

Components

No.	Part name	Material
1	Cover・Base	Reinforced PP (NK-7)
2	Latch	Nylon 66・Zinc alloy
3	Handle grip	Elastomer
4	Pressure release valve (※1)	Nylon 66・PTFE
5	Hinge pin	Stainless steel

No.	Part name	Material
6	Gasket	EPDM
7	Foam	Polyurethane / 12.7mm Pitch Pre-cut cubed foam (※2)
8	Key	Brass・PP

※1 Pressure release value automatically enables pressure within the case to be equalized with the surrounding, allowing it to be opened with ease, while keeping it waterproof.

※2 Pitch of Pre-cut cubed foam for NK940, 945, and 950 models is 15mm.

■ Only 2 latches are equipped with TSA lock for models with 4 or more latches. Refer to the drawings for more details.

NKK dimensions

■ DXF/DWG/PDF drawings available on our website.

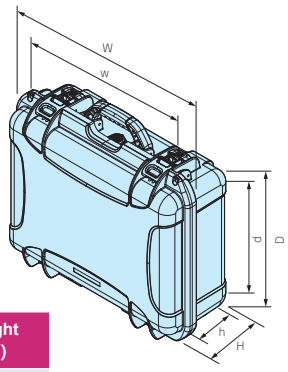

Product no. / Details

Without-foam type

Product no.	External dimensions			Internal dimensions			Hinge removal	Weight (kg)
● Black	W	D	H	w	d	h		
NKK905B	316	257	152	209	146	129	—	1.6
NKK908B	318	249	203	203	134	180	—	1.5
NKK915B	391	309	172	305	179	146	○	2.1
NKK918B	425	326	232	332	178	207	○	2.9
NKK920B	424	342	172	338	211	146	○	2.4
NKK923B	471	364	161	383	222	123	○	2.7
NKK925B	474	373	178	387	242	151	○	2.9
NKK930B	500	405	191	412	274	164	○	3.4
NKK933B	503	408	255	408	258	226	○	3.9
NKK935B	560	355	229	416	231	179	○	5.3
NKK938B	605	395	336	440	239	283	○	6.4
NKK940B	551	430	216	460	296	189	○	3.9
NKK945B	648	508	222	511	359	195	○	5.0
NKK950B	581	464	298	416	316	247	○	7.0
NKK960B	646	509	368	466	356	316	○	9.0
NKK963B	825	536	317	627	373	257	○	10.2
NEW NKK980B	760	409	186	635	276	142	○	4.9
NKK990B	1,196	439	168	1,061	303	143	○	8.3

With-foam type

Product no.	External dimensions			Internal dimensions			Weight (kg)
● Black	W	D	H	w	d	h	
NKK905BS	316	257	152	209	146	129	1.7
NKK908BS	318	249	203	203	134	180	1.7
NKK915BS	391	309	172	305	179	146	2.4
NKK918BS	425	326	232	332	178	207	2.9
NKK920BS	424	342	172	338	211	146	2.7
NKK923BS	471	364	161	383	222	123	3.1
NKK925BS	474	373	178	387	242	151	3.3
NKK930BS	500	405	191	412	274	164	3.9
NKK933BS	503	408	255	408	258	226	4.6
NKK935BS	560	355	229	416	231	179	6.0
NKK938BS	605	395	336	440	239	283	7.1
NKK940BS	551	430	216	460	296	189	4.6
NKK945BS	648	508	222	511	359	195	6.0
NKK950BS	581	464	298	416	316	247	8.0
NKK960BS	646	509	368	466	356	316	10.5
NEW NKK980BS	760	409	186	635	276	142	5.5
NKK990BS	1,196	439	168	1,061	303	143	9.8

NK・NKK dimensions

■ DXF/DWG/PDF drawings available on our website.

NK 903

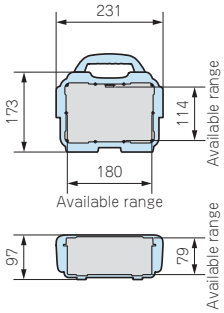

NK 904

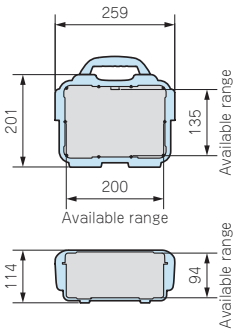

NK/NKK 905

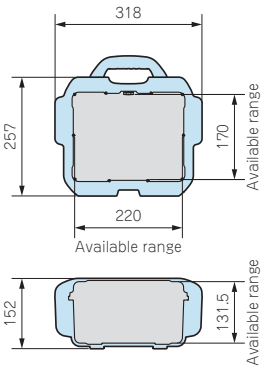

NK/NKK 908 NEW

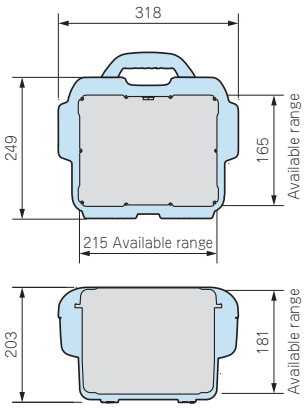

NK・NKK-1

NK • NKK dimensions

■ DXF/DWG/PDF drawings available on our website.

NK 909 NEW

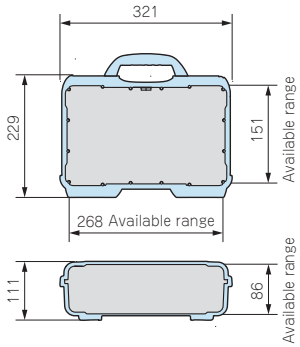

NK 910

NK910 is able to install optional aluminium panels on both the cover and base. (See page NKAP-1～NKAP-2)

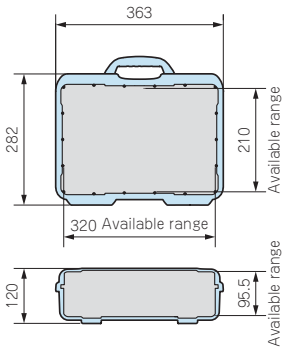

NK/NKK 915

APPLICATION EXAMPLE

EDUCATIONAL TABLET AID PACK
Product by FUJISOFT (Japan)

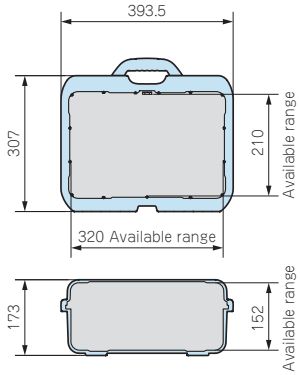

NK/NKK 918

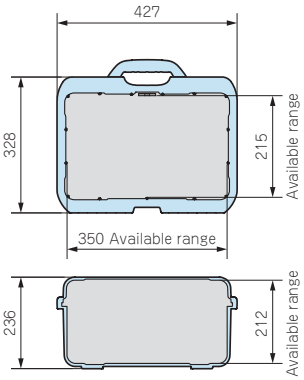

■ DXF/DWG/PDF drawings available on our website.

NK/NKK 920

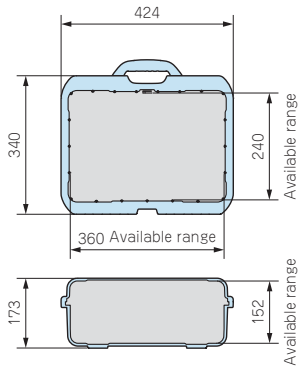

NK/NKK 923 NEW

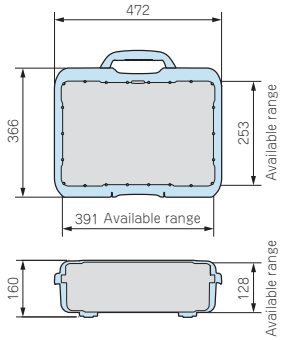

NK/NKK 925

APPLICATION EXAMPLE

ELECTRIC PROSPECTING / LOGGING DEVICE
Product by OYO CORPORATION (Japan)

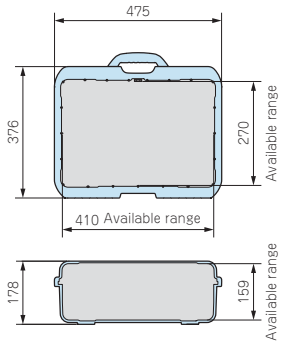

NK • NKK dimensions

■ DXF/DWG/PDF drawings available on our website.

NK/NKK 930

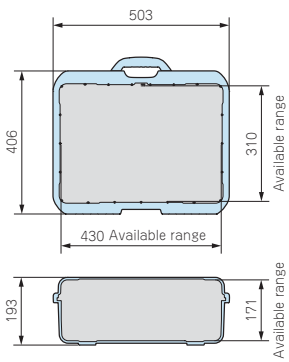

APPLICATION EXAMPLE

PRESS BREAK CHECKER
Product by Shinohara Press Service (Japan)

NK/NKK 933

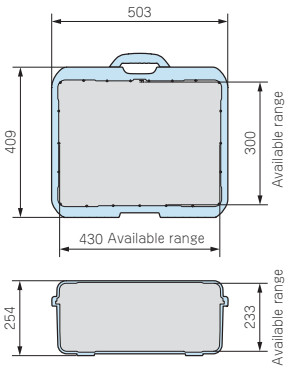

NK/NKK 935

Equipped with a 2 stage retractable handle and polyurethane wheels.

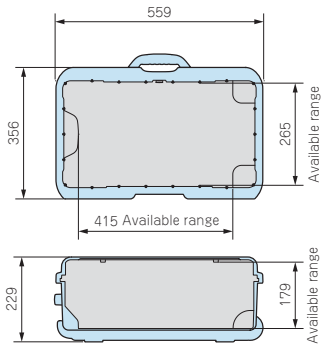

Cover can be detached by pulling out the hinge pin.
※Hinge pin shape varies based by model type.

■ DXF/DWG/PDF drawings available on our website.

NK•NKK 938

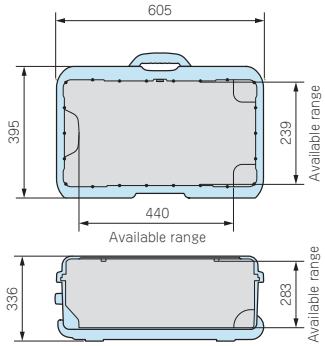

Equipped with a 2 stage retractable handle and polyurethane wheels.

NK•NKK 940

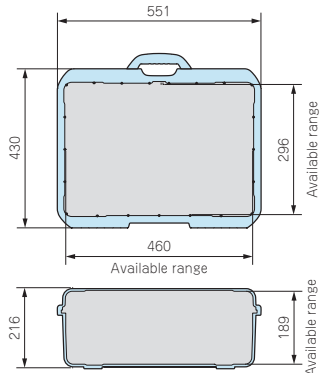

■ DXF/DWG/PDF drawings available on our website.

NK•NKK 945

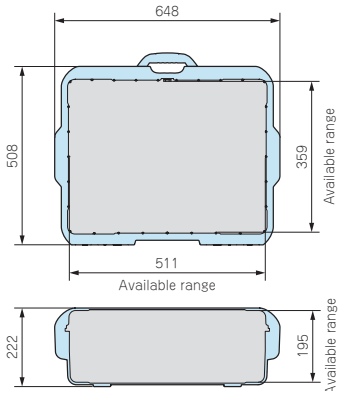

NK•NKK 950

Equipped with a 2 stage retractable handle
and polyurethane wheels.

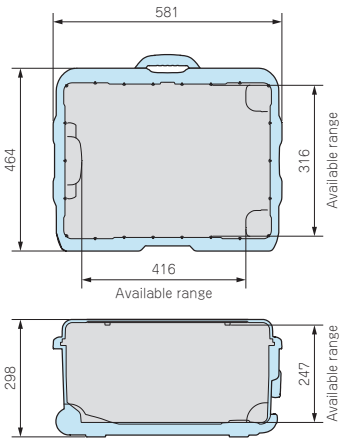

APPLICATION EXAMPLE

PV Power Supply Unit
Product by Sankosha (Japan)

■ DXF/DWG/PDF drawings available on our website.

NK•NKK 960

Equipped with a 2 stage retractable handle
and polyurethane wheels.

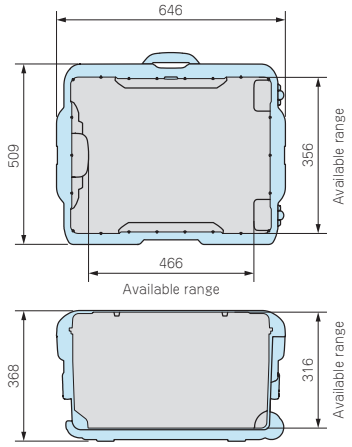

NK•NKK 963

Equipped with a 2 stage retractable handle
and polyurethane wheels.

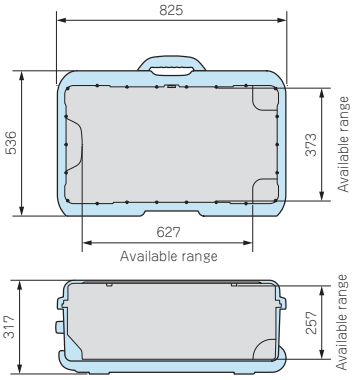

■ DXF/DWG/PDF drawings available on our website.

NK 970

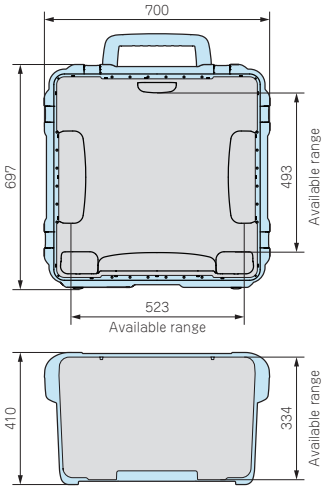

Equipped with a 2 stage retractable handle
and polyurethane wheels.

NK 975

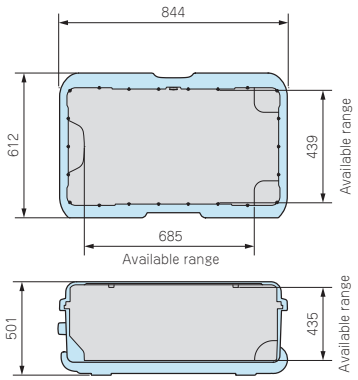

Equipped with a 2 stage retractable handle
and polyurethane wheels.

■ DXF/DWG/PDF drawings available on our website.

NK•NKK 980 NEW

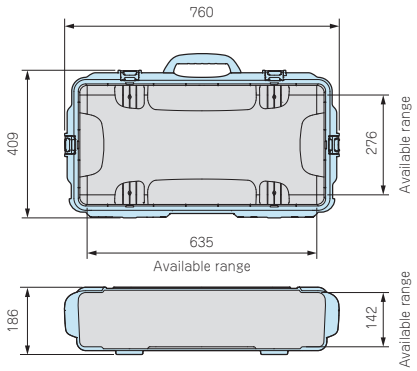

NKK 990

Equipped with polyurethane wheels.

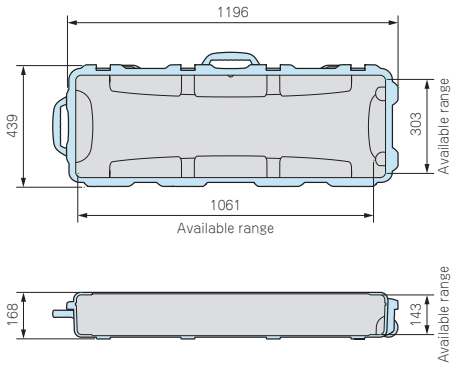

NKAP series ALUMINIUM PANEL for NK•NKK

NEW SIZE

■ Optional aluminium panel can be used as a controller control / display, measuring device, transmitter, and so on.

NKAP dimensions

■ DXF/DWG/PDF drawings available on our website.

NK • NKK series

Required screws vary based on size.

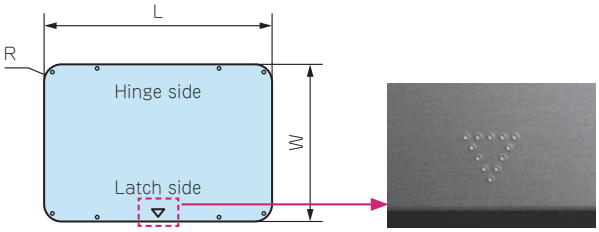

※Install panel with ▽ marking towards the latch.

Components

No.	Part name	Material
1	Panel	Aluminium A1100P (Silver anodized)
2	Screw	Stainless steel

■ Screws are not included on NKAP963 ~ NKAP975 models.
Use the screws included in NKAP-KIT series.
See page NKAP-KIT-1 ~ NKAP-KIT-2 for further details.

Product no. / Dimensions

Product no.	Suitable model	Thickness	L	W	R	▽ marking	Screw pcs	Inventory type	Weight(g)
NKAP903	NK903 Base side	1.5	198.5	136.5	15	—	4	In stock	109
NKAP904	NK904 Base side	1.5	226	163.5	18	—	4	In stock	149
NKAP905	NK/NKK905 Base side	1.5	257	207	21.5	—	4	In stock	214
NEW NKAP905C	NK/NKK905 Lid side	1.5	247.8	197	17	—	4	BTO (built to order)	195
NKAP908	NK/NKK908 Base side	1.5	250.9	200.1	18	—	4	In stock	203
NEW NKAP908C	NK/NKK908 Lid side	1.5	244.1	193.3	14	—	4	BTO (built to order)	189
NKAP909	NK909 Base side	1.5	304.7	190.4	18	—	4	In stock	234
NEW NKAP909C	NK909 Lid side	1.5	298.1	183.8	14	—	4	BTO (built to order)	219
NKAP910	NK910 Base side	2	346	244.5	17	—	4	In stock	452
NEW NKAP910C	NK910 Lid side	1.5	339.5	238	14	—	4	BTO (built to order)	329
NKAP915	NK/NKK915 Base side	2	364.5	252	28	○	8	In stock	496
NEW NKAP915C	NK/NKK915 Lid side	2	357.5	243.8	23.5	—	8	BTO (built to order)	465
NKAP918	NK/NKK918 Base side	2	397.5	268.5	27	—	8	In stock	574
NEW NKAP918C	NK/NKK918 Lid side	2	389.8	260.8	23.5	—	8	BTO (built to order)	541
NKAP920	NK/NKK920 Base side	2	399.5	285	28	○	8	In stock	606
NEW NKAP920C	NK/NKK920 Lid side	2	389.9	275.5	23.5	—	8	BTO (built to order)	572
NKAP923	NK/NKK923 Base side	2	446.3	309.1	28	—	8	In stock	737
NEW NKAP923C	NK/NKK923 Lid side	2	438.3	301.1	23.5	—	8	BTO (built to order)	704
NKAP925	NK/NKK925 Base side	2	451.5	318	28	○	8	In stock	760
NEW NKAP925C	NK/NKK925 Lid side	2	440.3	307	23.5	—	8	BTO (built to order)	720
NKAP930	NK/NKK930 Base side	2	476	350.5	27	○	8	In stock	880
NEW NKAP930C	NK/NKK930 Lid side	2	465.7	340	23.5	—	8	BTO (built to order)	841
NKAP933	NK/NKK933 Base side	2	477.5	352	27	—	8	In stock	908
NEW NKAP933C	NK/NKK933 Lid side	2	467.8	342	23.5	—	8	BTO (built to order)	851
NKAP935	NK/NKK935 Base side	2	535	301.5	26.5	○	8	In stock	855
NEW NKAP935C	NK/NKK935 Lid side	2	524.2	290.4	23.5	—	8	BTO (built to order)	810
NEW NKAP938	NK/NKK938 Base side	2	566.2	337.6	27	—	10	In stock	1,017
NEW NKAP938C	NK/NKK938 Lid side	2	558.3	329.7	23.5	—	10	BTO (built to order)	981
NKAP940	NK/NKK940 Base side	2	526.5	374	27	○	10	In stock	1,050
NEW NKAP940C	NK/NKK940 Lid side	2	516.3	363.9	23.5	—	10	BTO (built to order)	1,000
NKAP945	NK/NKK945 Base side	2	576.5	450	26.5	○	10	In stock	1,395
NEW NKAP945C	NK/NKK945 Lid side	2	570	443	23.5	—	10	BTO (built to order)	1,342
NKAP950	NK/NKK950 Base side	2	540.8	409.1	27	—	10	In stock	1,179
NEW NKAP950C	NK/NKK950 Lid side	2	530	398.6	23.5	—	10	BTO (built to order)	1,120
NKAP960	NK/NKK960 Base side	2	579.7	454.2	27	—	10	In stock	1,402
NEW NKAP960C	NK/NKK960 Lid side	2	568.7	443.3	23.5	—	10	BTO (built to order)	1,336
NEW NKAP963	NK/NKK963 Base side	2	742.4	463	23.2	—	—	BTO (built to order)	1,786
NEW NKAP970	NK970 Base side	2	620.2	620.2	23	○	—	BTO (built to order)	1,991
NEW NKAP970C	NK970 Lid side	2	622.6	622.6	23.8	○	—	BTO (built to order)	1,966
NEW NKAP975	NK975 Base side	2	760.5	538.2	23.5	—	—	BTO (built to order)	2,156
NEW NKAP975C	NK975 Lid side	2	760.4	538.2	23.5	—	—	BTO (built to order)	2,155

■ For BTO (built-to-order) models, production lead time required will be 5 business days after payment confirmation.

MT series MOUNTING SCREW for NK • NKK

MT3-10T

MT3.5-10T

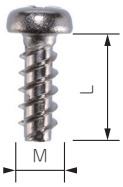

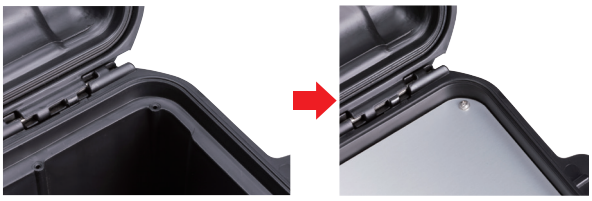

- Mounting screws for installation of NKAP panel onto NK • NKK series.
- See NKAP drawings on our website for suitable screw size.

Product no. / Dimensions

Product no.	M	L	Details	Pack of
MT3-10T	3	10	Washer head self-tapping screw	10
MT3.5-10T	3.5	10	Panhead self-tapping screw + Washer	10 each

Material : Stainless steel

CUSTOMIZATION on ALUMINIUM PANEL

- Customization services such as punching press, laser cutting, digital inkjet printing, silkscreen printing, and engraving on NKAP panel are available.
- Custom colors can also be performed either through anodization, or painting.

- Self-clinching Standoff/Stud/Nut or Welded Fastener customization is available.
- An original control panel with machined aluminum panel and overlay sheet can be manufactured.

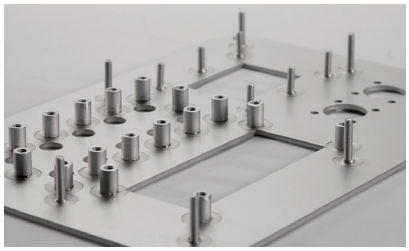

NKAP-KIT PANEL INSTALLATION KIT for NK•NKK

NEW

- Panel installation kit for NK • NKK963, NK970, and NK975 models.
  For installation of NKAP panels onto NK • NKK963, NK970, and NK975 models that do not have mounting bosses.
- Use included drill bit to drill mounting holes ※ Use electric screw driver for drilling the holes.
  Waterproofing ability will be lost once holes are drilled.

  ※Drilling is to be performed by customer.
  ※Kit cannot be mounted on cover side of NK • NKK963 model.

Components

No.	Part name	Pcs
1	Panel installation parts	20
2	Screw	40
3	Drill bit	1
4	Hole guide	1

Product no. / Dimensions

Product no.	Included parts
NKAP-KIT	1 set (Installation parts x 20 pcs, Screw x 40 pcs, Bit x 1 pc, and Guide x 1)

- Guide markings for drilling holes are located on the case.

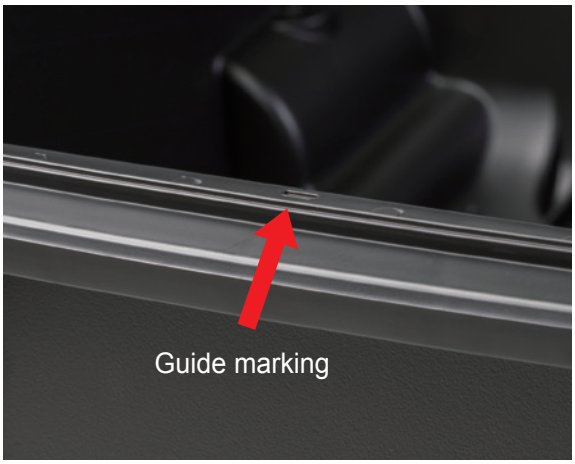

How to install panel with panel mount kit

■ Prepare electric screw driver and a manual Phillips (plus) screw driver.

■ Check the installation video from QR code.

Confirm the mounting positions. ○

Fit the hole guide to the guide marking.

Drill the hole using included drill bit while attaching the hole guide on the case.

After the hole is drilled, insert the screw from the exterior side.

Attach the installation parts to the inserted screw. (Place the insert nut upward.)

Tighten the screw firmly.
(Recommended torque : 0.8 ~ 1.0 N • m)

Place the panel on the panel mount part and tighten the mount screw.

Tighten all the mount screws.

DVI SERIES DIVIDER for NK • NKK

NEW SIZE

- Divider for organizing your components or equipment. Adjustable hook and loop fasteners allows for easily size adjustments.
- Padded dividers are designed to easily organize and protect your equipment.

APPLICATION EXAMPLE

Product no. / Suitable case

Product no.	Suitable case	Weight（g）
DVI905	NK/NKK905	288
NEW DVI908	NK/NKK908	453
DVI915	NK/NKK915	542
DVI918	NK/NKK918	800
DVI920	NK/NKK920	753
NEW DVI923	NK/NKK923	1,025
DVI925	NK/NKK925	968
DVI930	NK/NKK930	1,220
DVI933	NK/NKK933	1,500
DVI935	NK/NKK935	1,190
DVI940	NK/NKK940	1,695
DVI945	NK/NKK945	1,940
DVI950	NK/NKK950	1,810
DVI960	NK/NKK960	3,230

DVI905 / 908

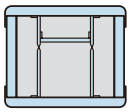

DVI915 / 918

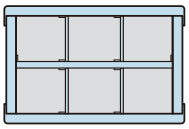

DVI920

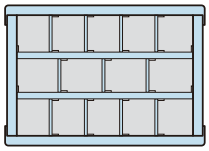

DVI923 / 925

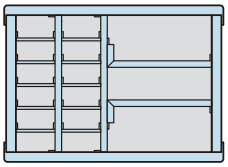

DVI930 / 933

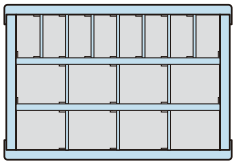

DVI935

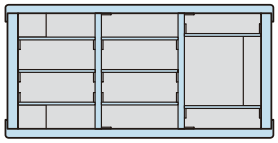

DVI940

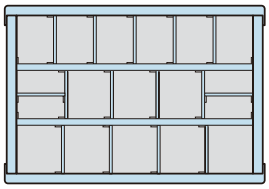

DVI945

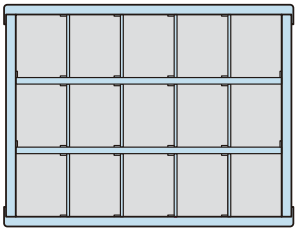

DVI950

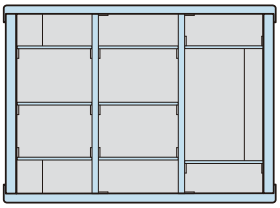

DVI960 ※2 divider layers available.

▼1st layer

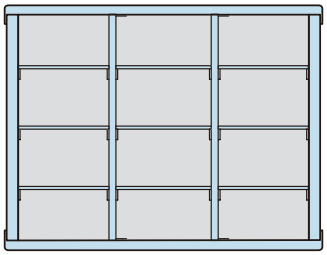

▼2nd layer

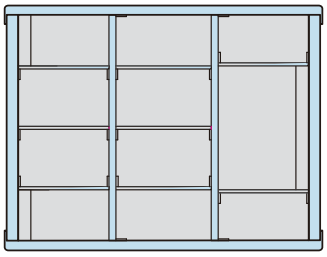

NKSP series SPONGE FOAM for NK•NKK

NEW SIZE

- Pre-cubed foam can be easily cut to make a suitable storage space.
- Available as three-layered foam set with waved (for cover side), pre-cubed foam (for base side) and base foam.

※Pre-cubed foam is not available for NKSP990 model.

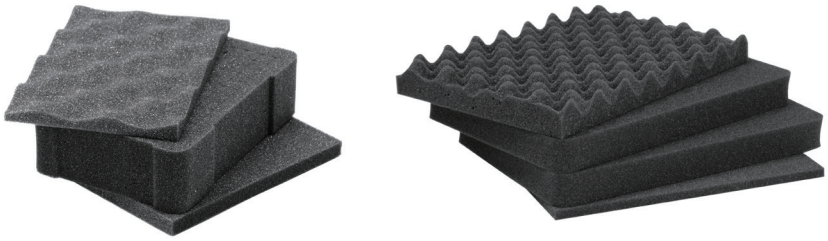

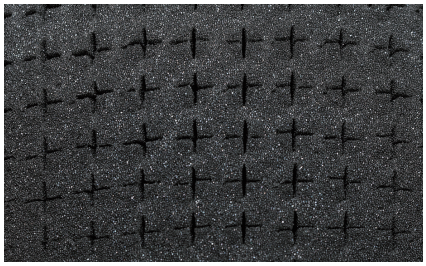

※ Color migration may occur depending on usage conditions.

- DXF/DWG/PDF drawings available on our website.

Product no. / Details

Product no.	Suitable model	Foam layer details	Cut-line pitch	Weight(g)
NKSP903	NK903	Waved foam x 1 • Pre-cubed foam x 1 • Base foam x 1	12.7	40
NKSP904	NK904	Waved foam x 1 • Pre-cubed foam x 1 • Base foam x 1	12.7	70
NKSP905	NK/NKK905	Waved foam x 1 • Pre-cubed foam x 1 • Base foam x 1	12.7	120
NKSP908	NK/NKK908	Waved foam x 1 • Pre-cubed foam x 2 • Base foam x 1	12.7	158
NKSP909	NK909	Waved foam x 1 • Pre-cubed foam x 1 • Base foam x 1	12.7	158
NKSP910	NK910	Waved foam x 1 • Pre-cubed foam x 1 • Base foam x 1	12.7	150
NKSP915	NK/NKK915	Waved foam x 1 • Pre-cubed foam x 2 • Base foam x 1	12.7	250
NKSP918	NK/NKK918	Waved foam x 1 • Pre-cubed foam x 3 • Base foam x 1	12.7	390
NKSP920	NK/NKK920	Waved foam x 1 • Pre-cubed foam x 2 • Base foam x 1	12.7	320
NKSP923	NK/NKK923	Waved foam x 1 • Pre-cubed foam x 2 • Base foam x 1	12.7	399
NKSP925	NK/NKK925	Waved foam x 1 • Pre-cubed foam x 2 • Base foam x 1	12.7	430
NKSP930	NK/NKK930	Waved foam x 1 • Pre-cubed foam x 2 • Base foam x 1	12.7	540
NKSP933	NK/NKK933	Waved foam x 1 • Pre-cubed foam x 3 • Base foam x 1	12.7	700
NKSP935	NK/NKK935	Waved foam x 1 • Pre-cubed foam x 2 • Base foam x 1	12.7	710
NKSP938	NK/NKK938	Waved foam x 1 • Pre-cubed foam x 4 • Base foam x 1	12.7	856
NKSP940	NK/NKK940	Waved foam x 1 • Pre-cubed foam x 2 • Base foam x 1	15	730
NKSP945	NK/NKK945	Waved foam x 1 • Pre-cubed foam x 2 • Base foam x 1	15	1,000
NKSP950	NK/NKK950	Waved foam x 1 • Pre-cubed foam x 3 • Base foam x 1	15	1,000
NKSP960	NK/NKK960	Waved foam x 1 • Pre-cubed foam x 4 • Base foam x 1	12.7	1,500
NEW NKSP980	NK/NKK980	Waved foam x 1 • Pre-cubed foam x 2 • Base foam x 1	12.7	650
NKSP990	NKK990	Waved foam x 1 • Uncut foam x 2 • Base foam x 1	—	1,490

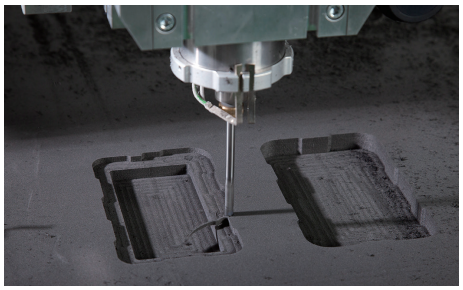

CUSTOMIZE

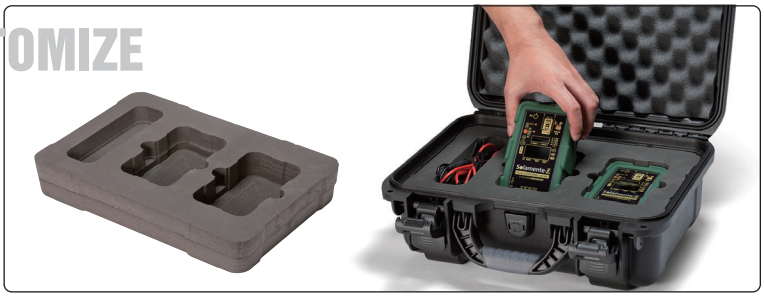

- Customizable foam is available.
- Custom foam option provide own designed foam around customer needs.

CUSTOMIZED EXAMPLE

Accessories (Optional parts)

IDT-17 LUGGAGE TAG

NEW

IDT dimensions (mm)

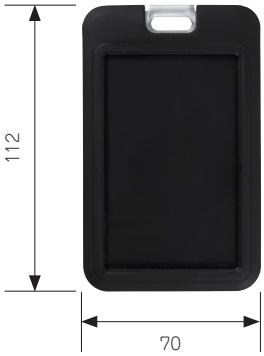

Available range (mm)

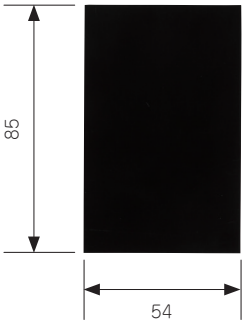

Available thickness up to t = 1.5mm

- Luggage tag composed of an acrylic holder and silicone cover.
- The contents and information of the case can be displayed for easy organization and identification.
- 170mm strap length.
- Do not pull the strap with excessive force so as to prevent the strap from coming out of the strap fastener.

※ Luggage tag is not subject to RoHS regulations.

Installation example

Components

No.	Part name	Pcs	Material	Color
1	Holder	1	Acrylic	Transparent
2	Cover	1	Silicone	Black
3	Strap	1	Polyester	Black
4	Strap fastener	1	ABS	Gray

Product no. / Details

Product no.	Weight (g)	Pack of
IDT-17	35.8	1 set

DP-1527 ADHESIVE DOCUMENT POUCH

NEW

Thickness: 50μm

- Adhesive document pouch for shipping label, etc.
- Pouch is fully sealable to prevent documentation from slipping out during transit.
- Documents can be easily retrieved through the perforations on the pouch.
- Aside from shipping labels, invoices, instruction manuals and so on can be contained within.
- Possible to stick on protector case, tool case, etc. such as NK, NKK, MINI, XTRA series.

※ Adhesive residue or slight peeling may remain.

- Possible to stick on the grained (fine unevenness) polypropylene material.

※Note : Depending on the material or surface finish, the pouch may not be able to be removed properly.

Installation example

Components

No.	Part name	Pcs	Material	Color
1	Pouch	1	Polyethylene	Transparent

Product no. / Details

Product no.	Weight (g)	Pack of
DP-1527	77.8	10 pcs

NSTP SERIES SHOULDER STRAP

■ Nylon shoulder strap with polyurethane pads to reduce fatigue when carrying.

Components

No.	Part name	Material
1	Belt	Nylon
2	Pad	Neoplane・Polyurethane
3	Hook	Steel (Black painted)

Product no. / Feature

Product no.	Weight (g)	Quantity
NSTP810	238	1

※Belt length can be adjustable from 810mm to 1,170mm
※Not applicable for NK903, NK904, NKK990, NK・NKK950 and NK・NKK960 models.

AB145S SERIES PADLOCK

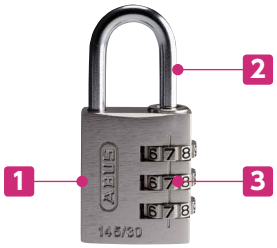

Components

No.	Part name	Material
1	Body	Aluminium
2	Shank	Steel
3	Dial	Zinc alloy

Product no. / Feature

Product no.	Weight (g)	Quantity
AB145S	52	1

NKST SERIES NAMEPLATE STICKER

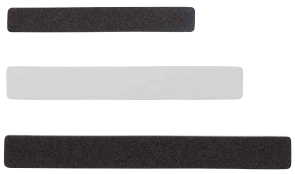

Color nameplate can be performed by digital inkjet printing on a white plate.

■ 0.3mm thick plastic nameplate with double sided tape on the back.
Custom name plate can be made with your company name, logo, product number or lot number with digital inkjet printing.

■ Digital inkjet print or silkscreen is possible from just 1 piece.

Product no. / Dimensions

Product no.		Suitable case	Dimensions		Quantity
● Black	● White		A	B	
NKST-1B	NKST-1W	NANO SERIES	50	6.8	1
NKST-2B	NKST-2W	NK903, 904	62.7	9.1	1
NKST-3B	NKST-3W	NK/NKK905 ～ 960	76.1	9.1	1

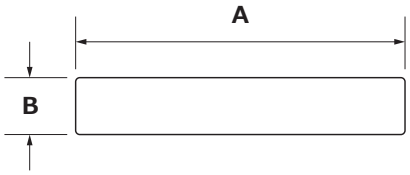

UNIQUE COLOR AVAILABLE

NANO SERIES

※See page NANO-1～NANO-2

Orange

Purple

Red

NK SERIES

※See page NK-1～NK-2

Graphite

Orange

Olive

Silver
Only available for
NK903～920
NK925～945 models

Lime
Only available for
NK903, 904, 905
908 and 910 models

Blue
Only available for
NK903 and 904
Models

Red
Only available for
NK903 and 904
Models

●For NKK series, Olive color is only available for NKK990 model.

Handy Carrying Case for Your Everyday Needs

A wide selection to choose from with optional customization services available to suit various designs.

Use as tools storage, precision parts, measurement devices, test samples, medical equipment, and so on.

SNAP-IN LATCH for easy handling

Equipped with a SNAP-IN LATCH for easy to open and close.
Best used at locations where storage of equipment are required.
SNAP-IN LATCH on MAXI series are available in 7 different colors: black, gray, marine, red, orange, yellow and light gray.

Protective sponge foam

MILLING

Optional foam comes with pre-cubed foam to allow for easy modification by removing the required squares.
Foam customization is also available where your own unique form design and cut-outs can be performed.

CUSTOMIZE

●CNC Foam Milling

Digital inkjet printing with low initial tooling cost

PRINTING

Digital inkjet printing on tool cases with low initial tooling cost.
Full color printing is possible with digital inkjet printing.

MAXI · MINI · XTRA-2

MAXI SERIES PLASTIC CARRYING CASE

- Universal storing case with easy opening/closing snap-in latch.
- Available in 25 different sizes.
- Optional foam are available to protect your device or equipment.
- Suitable for storing tools, jigs, precision parts, measurement devices, test samples, medical equipment, and so on.

Technical Data
Operating temperature : -20℃～+60℃

APPLICATION EXAMPLE

Light gray color is also available.

▶ See page SP-Custom-1～SP-Custom-2 for custom foam and custom inkjet printing.

Components

No.	Part name	Material
1	Cover	ABS
2	Base	ABS
3	Snap-in latch	ABS
4	Hinge	PP

MAXI dimensions

■ Drawings below are reference examples only.

DXF/DWG/PDF drawings available on our website.

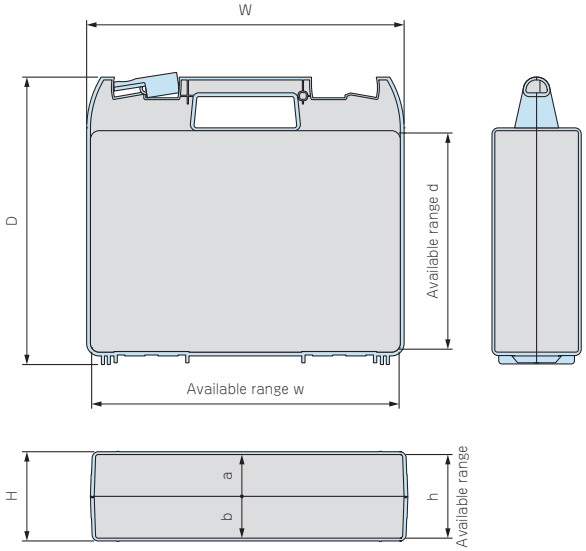

■ Red and black snap-in latches are included. You can exchange to your preferred color.

See page MAXI・XTRA-ACC-1 for how to exchange the snap-in latch.

●Red

●Black

Product no. / Dimensions

Product no.	Dimensions (External)			Dimensions (Internal)					Weight (kg)
● Black	W	D	H	w	d	h	a	b	
MAXI 252307 B	254	230	72	242	169	66	33	33	0.4
MAXI 272408 B	271	241	84	258	180	78	39	39	0.5
MAXI 292610 B	289	256	97	276	194	91	45.5	45.5	0.6
MAXI 292612 B	289	256	117	276	192	111	45.5	65.5	0.65
MAXI 292614 B	289	256	137	274	192	131	65.5	65.5	0.68
MAXI 353106 B	345	308	61	333	242	54	27	27	0.78
MAXI 353107 B	345	308	72	333	242	65	27	38	0.8
MAXI 353108 B	345	308	83	332	242	76	38	38	0.8
MAXI 353111 B	345	308	112.5	328	238	105.5	27	78.5	0.9
MAXI 353112 B	345	308	123.5	328	238	116.5	38	78.5	1.0
MAXI 353116 B	345	308	164	328	238	157	78.5	78.5	1.2
MAXI 393309 B	390	334	88	377	267	80	40	40	1.0
MAXI 393310 B	390	334	103	377	265	95.5	40	55.5	1.1
MAXI 393312 B	390	334	118	377	265	111	55.5	55.5	1.1
MAXI 433614 B	432	363	138	412	290	131	65.5	65.5	1.5
MAXI 433617 B	432	363	174	408	286	166.5	101	65.5	1.6
MAXI 433621 B	432	363	210	408	286	202	101	101	1.74
MAXI 453809 B	452	383	89	438	314	81	40.5	40.5	1.3
MAXI 453811 B	452	383	109	436	312	101	40.5	60.5	1.4
MAXI 453813 B	452	383	129	436	312	121	60.5	60.5	1.5
MAXI 453814 B	452	383	144.5	432	308	136.5	40.5	96	1.6
MAXI 453816 B	452	383	164.5	432	308	156.5	60.5	96	1.7
MAXI 453820 B	452	383	200	432	308	192	96	96	1.8
MAXI 544517 B	539	450	169	516	365	162	81	81	2.4
MAXI 544521 B	539	450	205	516	362	197	81	116	2.7

MASP SERIES FOAM SET for MAXI

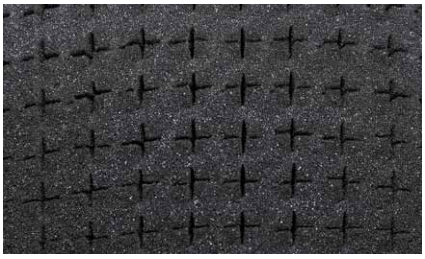

- Pre-cubed polyurethane foam can be easily cut to make a suitable storage space.
- Available as a three-layered sponge foam set with waved (for cover side), pre-cubed foam (for base side) and base layer.

- DXF/DWG/PDF drawings available on our website.

Product no. / Suitable case

Product no.	Suitable case	Foam layer details	Cut-line pitch
MASP 252307	MAXI 252307 B	Waved layer x 1・Pre-cubed foam layer x 1・Base layer x 1	15mm
MASP 272408	MAXI 272408 B	Waved layer x 1・Pre-cubed foam layer x 1・Base layer x 1	15mm
MASP 292610	MAXI 292610 B	Waved layer x 1・Pre-cubed foam layer x 1・Base layer x 1	15mm
MASP 292612	MAXI 292612 B	Waved layer x 1・Pre-cubed foam layer x 2・Base layer x 1	15mm
MASP 292614	MAXI 292614 B	Waved layer x 1・Pre-cubed foam layer x 2・Base layer x 1	15mm
MASP 353106	MAXI 353106 B	Waved layer x 1・Pre-cubed foam layer x 1・Base layer x 1	15mm
MASP 353107	MAXI 353107 B	Waved layer x 1・Pre-cubed foam layer x 1・Base layer x 1	15mm
MASP 353108	MAXI 353108 B	Waved layer x 1・Pre-cubed foam layer x 2・Base layer x 1	15mm
MASP 353111	MAXI 353111 B	Waved layer x 1・Pre-cubed foam layer x 2・Base layer x 1	15mm
MASP 353112	MAXI 353112 B	Waved layer x 1・Pre-cubed foam layer x 4・Base layer x 1	15mm
MASP 353116	MAXI 353116 B	Waved layer x 1・Pre-cubed foam layer x 1・Base layer x 1	15mm
MASP 393309	MAXI 393309 B	Waved layer x 1・Pre-cubed foam layer x 1・Base layer x 1	15mm
MASP 393310	MAXI 393310 B	Waved layer x 1・Pre-cubed foam layer x 1・Base layer x 1	15mm
MASP 393312	MAXI 393312 B	Waved layer x 1・Pre-cubed foam layer x 1・Base layer x 1	15mm
MASP 433614	MAXI 433614 B	Waved layer x 1・Pre-cubed foam layer x 2・Base layer x 1	15mm
MASP 433617	MAXI 433617 B	Waved layer x 1・Pre-cubed foam layer x 4・Base layer x 1	15mm
MASP 433621	MAXI 433621 B	Waved layer x 1・Pre-cubed foam layer x 1・Base layer x 1	15mm
MASP 453809	MAXI 453809 B	Waved layer x 1・Pre-cubed foam layer x 1・Base layer x 1	20mm
MASP 453811	MAXI 453811 B	Waved layer x 1・Pre-cubed foam layer x 1・Base layer x 1	20mm
MASP 453813	MAXI 453813 B	Waved layer x 1・Pre-cubed foam layer x 2・Base layer x 1	20mm
MASP 453814	MAXI 453814 B	Waved layer x 1・Pre-cubed foam layer x 2・Base layer x 1	20mm
MASP 453816	MAXI 453816 B	Waved layer x 1・Pre-cubed foam layer x 4・Base layer x 1	20mm
MASP 453820	MAXI 453820 B	Waved layer x 1・Pre-cubed foam layer x 2・Base layer x 1	20mm
MASP 544517	MAXI 544517 B	Waved layer x 1・Pre-cubed foam layer x 2・Base layer x 1	20mm
MASP 544521	MAXI 544521 B	Waved layer x 1・Pre-cubed foam layer x 3・Base layer x 1	20mm

MINI SERIES PLASTIC CARRYING CASE

- Light weight and simple tool case.
- Optional foam available to protect your device or equipment.
- Suitable for storing test samples, tools, precision parts, and so on.
- Made from PP plastic, and available in light gray color.

Technical Data
Operating temperature : -20℃～+60℃

APPLICATION EXAMPLE

▶ See page SP-Custom-1～SP-Custom-2 for custom foam and custom inkjet printing.

MINI dimensions

■ Drawings below are reference examples only.
DXF/DWG/PDF drawings available on our website.

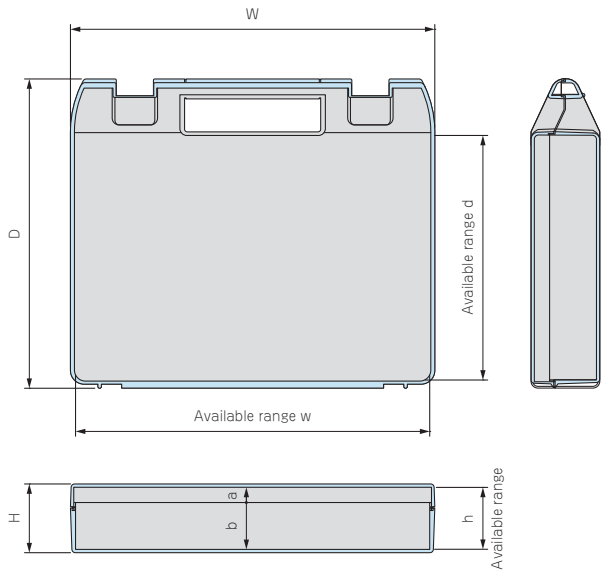

Product no. / Dimensions

Product no.	Dimensions (External)			Dimensions (Internal)					Weight (g)
	W	D	H	w	d	h	a	b	
MINI 231905 G	230	187	45	222	140.5	40	9	31	230
MINI 272305 G	265	225	50	258	175	45	11	34	330
MINI 332806 G	327	275	55	319	225	49	13	36	470
MINI 352808 G	345	284	83	336	225	78	22.5	55.5	630

Accessories (Optional parts)

MISP SERIES FOAM SET for MINI

■ Pre-cubed polyurethane foam can be easily cut to make a suitable storage space.
■ Available as a three-layered foam set with waved (for cover side), pre-cubed foam (for base side) and base layer.

■ DXF/DWG/PDF drawings available on our website.

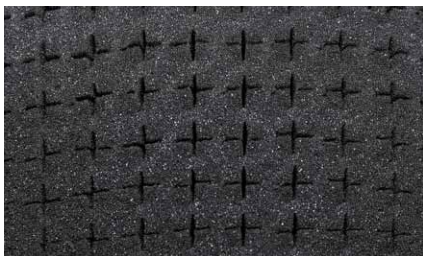

Product no. / Suitable case

Product no.	Suitable case	Foam layer details
MISP 2319	MINI 231905 G	Waved layer x 1・Pre-cubed foam layer x 1・Base layer x 1
MISP 2723	MINI 272305 G	Waved layer x 1・Pre-cubed foam layer x 1・Base layer x 1
MISP 3328	MINI 332806 G	Waved layer x 1・Pre-cubed foam layer x 1・Base layer x 1
MISP 3528	MINI 352808 G	Waved layer x 1・Pre-cubed foam layer x 1・Base layer x 1

XTRA SERIES PLASTIC CARRYING CASE

- Slim and rounded handle tool case.
- Optional foam are available to protect your device or equipment.
- Suitable for storing measuring devices, test samples, tools, precision parts, and so on.

Technical Data
Operating temperature : -20℃～+60℃

APPLICATION EXAMPLE

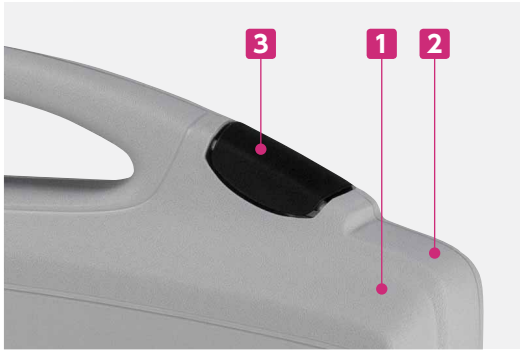

Components

No.	Part name	Material
1	Cover	PP or ABS
2	Base	PP or ABS
3	Latch	PP

※ABS material is used for the Cover and Base of XTRA494614B/G models.

▶ See page SP-Custom-1～SP-Custom-2 for custom foam and custom inkjet printing.

XTRA dimensions

■ Drawings below are reference examples only.
DXF/DWG/PDF drawings available on our website.

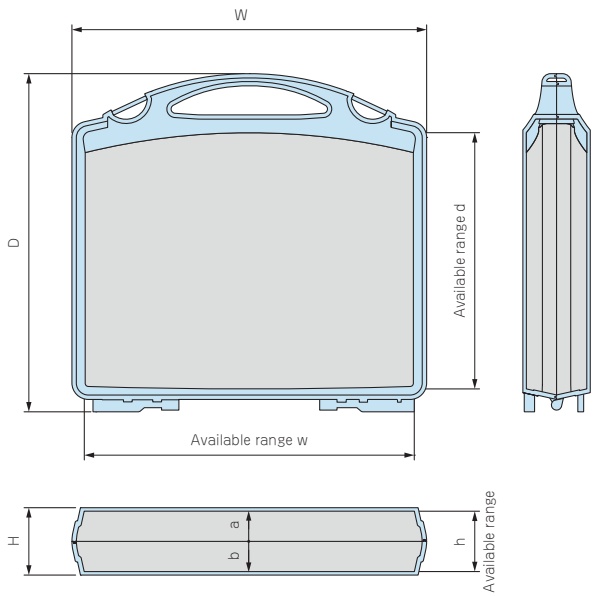

Product no. / Dimensions

Product no.		Dimensions (External)			Dimensions (Internal)					Weight (kg)
● Black	● Light gray	W	D	H	w	d	h	a	b	
XTRA 262505 B	XTRA 262505 G	258	246	49	240	188	42	21	21	0.4
XTRA 323108 B	XTRA 323108 G	320	308	81	296	230	76	38	38	0.6
XTRA 403810 B	XTRA 403810 G	397	377	96	368	290	90	45	45	0.9
XTRA 494614 B	XTRA 494614 G	486	460	136	450	355	131	65.5	65.5	1.66

Accessories (Optional parts)

XTSP SERIES FOAM SET for MINI

■ Pre-cubed polyurethane foam can be easily cut to make a suitable storage space.

■ Available as a three-layered foam set with waved (for cover side), Pre-cubed foam (for base side) and base layer.

■ DXF/DWG/PDF drawings available on our website.

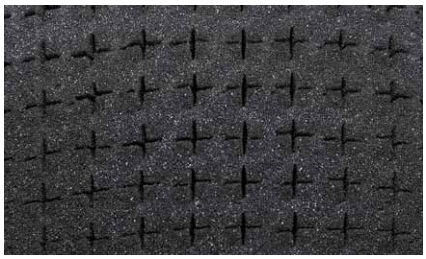

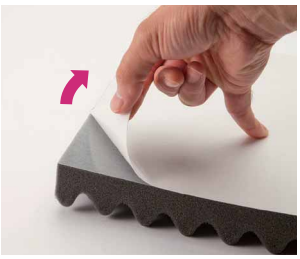

Both waved and base layer has a double-sided tape attached on the back side. Peel off to adhere onto the inner side of the case.

Product no. / Suitable case

Product no.	Suitable case	Foam layer details	Cut-line pitch
XTSP 2625	XTRA 262505 B/G	Waved layer x 1・Pre-cubed foam layer x 1・Base layer x 1	15mm
XTSP 3231	XTRA 323108 B/G	Waved layer x 1・Pre-cubed foam layer x 1・Base layer x 1	15mm
XTSP 4038	XTRA 403810 B/G	Waved layer x 1・Pre-cubed foam layer x 1・Base layer x 1	15mm
XTSP 4946	XTRA 494614 B/G	Waved layer x 1・Pre-cubed foam layer x 1・Base layer x 1	20mm

HSTP SERIES SHOULDER STRAP

Product no. / Feature

Product no.	Weight (g)	Quantity
HSTP1000	129	1

- Hole milling is required on the case for shoulder strap installation.
- Recommended hole for installation is φ6.2mm.

ML SERIES COLOR LATCH for MAXI

- Replacement latch for MAXI case.

How to remove latch

Hold the case and pull the latch.

How to install latch

Hold the case, insert thinner side first, and push the opposite side in.

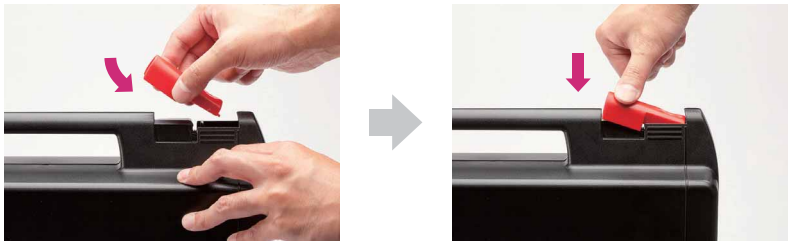

Product no. / Suitable case

Product no.							Suitable case	Quantity
● Black	● Marine	● Yellow	● Orange	○ Red	● Light gray	● Gray		
ML-SB	ML-SM	ML-SY	ML-SO	ML-SR	ML-SL	ML-SG	MAXI 252307 B ～ MAXI 292614 B	2
ML-LB	ML-LM	ML-LY	ML-LO	ML-LR	ML-LL	ML-LG	MAXI 353106 B ～ MAXI 544521 B	2

TAKACHI

CNC Foam Milling

Customize based on how you want it to be!

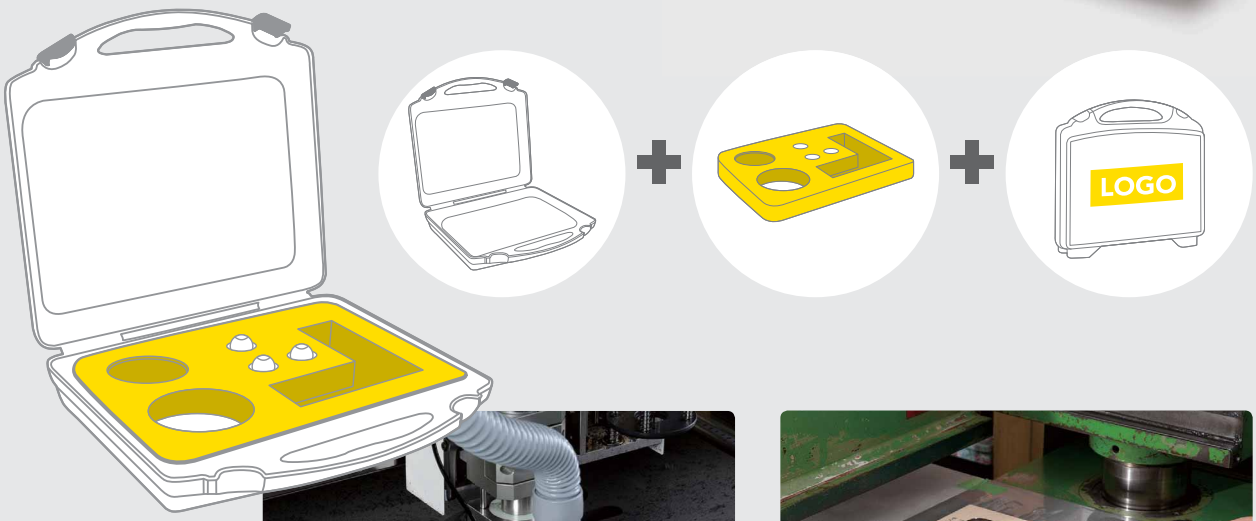

CNC foam cutting machine enables quick and cost-effective hole milling service.

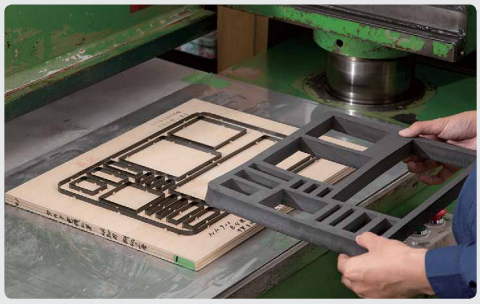

For mass production, cost-effective mold press cutting is also available.

APPLICATION EXAMPLE

CNC Machining • Printing Service for Case

CNC Machining

■ CNC machining for your switch, connector, display and so on is possible from just 1 piece.

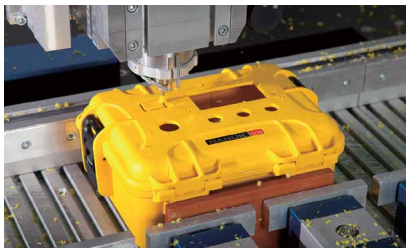

Printing Service

■ Digital inkjet printing, silkscreen printing and nameplate sticker printing is possible from just 1 piece.

Low initial cost
No plate processing fee

Inkjet printing

Low printing cost for small quantities.

- Data adjustment fees may be charged again if significant changes are required on your repeat order.
- If the data in recommended format is provided

Data adjustment fees

- Data or images other than recommended formats

Data creation fees + Data adjustment fees

Silk-screen initial tooling

Low printing cost for large quantity single color print.

Silk-screen initial tooling

Plate making	Silk-screen making

Recommended data formats

PDF (.pdf -100%)	Vector file (.ai)	EPS (.eps)

Initial cost can be reduced with the recommended formats.

Able to Inkjet print on rigid urethane foam.

APPLICATION EXAMPLE