TAKACHI

HYR SERIES HEAT-SINK RACK MOUNTING ENCLOSURE

Heat Resistant

Technical Data
Protection class: IP40

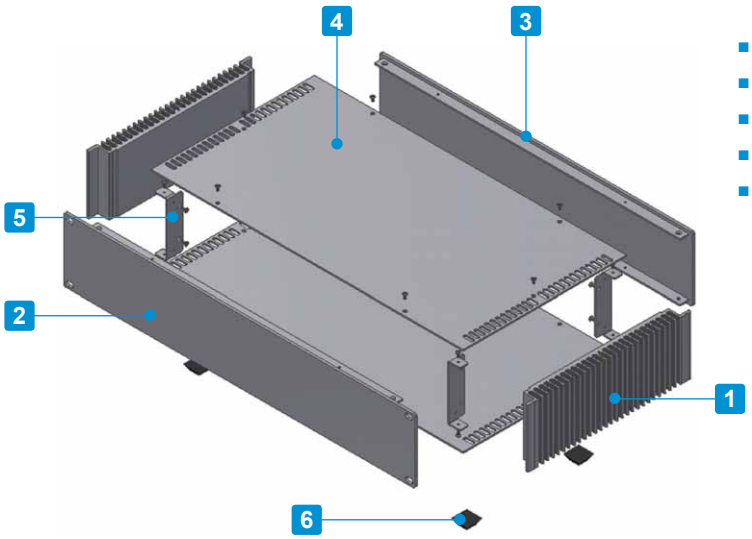

- 8 different sizes, each with 2 color types available for selection.
- Stylish and elegantly designed with a hairline finish.
- Excellent cooling performance with the heat-sink side plates.
- Tough and robust enclosure from using aluminium extrusion parts.
- Simple and easy to assemble construction.

Components

No.	Part name	Pcs	Material	Color / Finish
1	Heat-sink side plate	2	Extruded aluminium A6063S-T5	Silver • Black / Anodized
2	Front panel	1	Extruded aluminium A6063S-T5	Silver • Black / Hairline brushed & Anodized
3	Rear panel	1	Extruded aluminium A6063S-T5	Silver • Black / Hairline brushed & Anodized
4	Top • Bottom cover	2	Aluminium A1050P t=2.0	Silver • Black / Hairline brushed & Anodized
5	Corner support	4	Steel SPCC t=1.6	Trivalent chromate
6	Rubber feet	4	Polyurethane	Black
–	Screw	1 set	Steel M3	Nickel plated · Black trivalent chromate

Accessories (Optional parts)

Mounting plate HYC series
See page HYC • HYCL-1

L-bracket HYCL series
See page HYC • HYCL-1

TORX screw MR3-5Z series
See page HY • HYR • HYRH-2

HYR dimensions (outside view)

■ Drawings below are reference examples only.
DXF/DWG/PDF drawings available on our website.

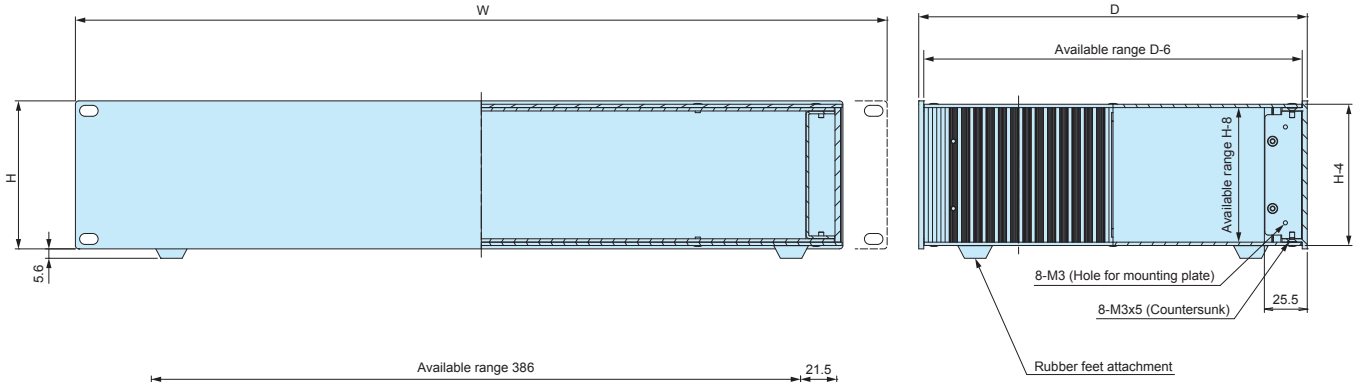

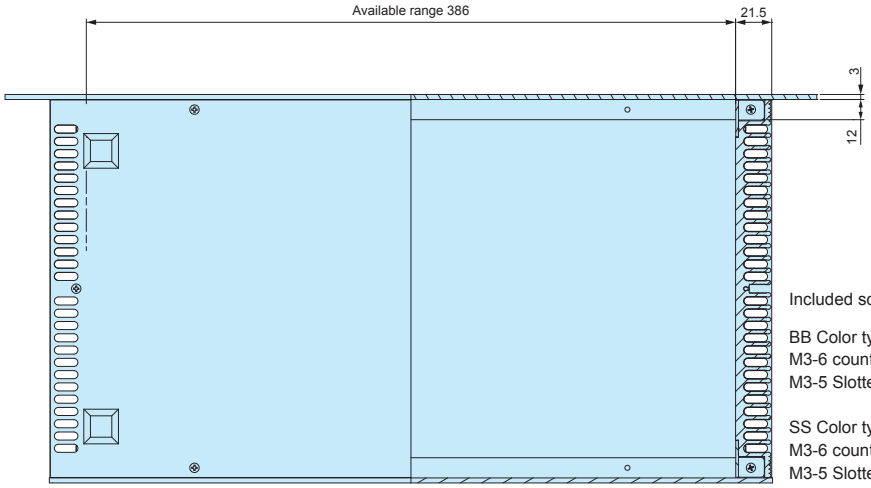

Included screws

BB Color type
M3-6 countersunk screw, black trivalent chromate x 16 pcs
M3-5 Slotted raised countersunk screw, black trivalent chromate x 12 pcs

SS Color type
M3-6 countersunk screw, nickel plated x 16 pcs
M3-5 Slotted raised countersunk screw, nickel plated x 12 pcs

Product no. / Dimensions

Product no.		W	H	D	Standard	Weight (kg)
● Silver	● Black					
HYR 44-43-23SS	HYR 44-43-23BB	482.6	44	231	EIA	1.9
HYR 44-43-33SS	HYR 44-43-33BB	482.6	44	330	EIA	2.6
HYR 88-43-23SS	HYR 88-43-23BB	482.6	88	231	EIA	2.8
HYR 88-43-33SS	HYR 88-43-33BB	482.6	88	330	EIA	3.7
HYR133-43-23SS	HYR133-43-23BB	482.6	132.5	231	EIA	3.6
HYR133-43-33SS	HYR133-43-33BB	482.6	132.5	330	EIA	4.7
HYR177-43-23SS	HYR177-43-23BB	482.6	177	231	EIA	4.5
HYR177-43-33SS	HYR177-43-33BB	482.6	177	330	EIA	5.9

TAKACHI

HYRH SERIES HEAT-SINK RACK MOUNTING ENCLOSURE with HANDLE

Heat Resistant

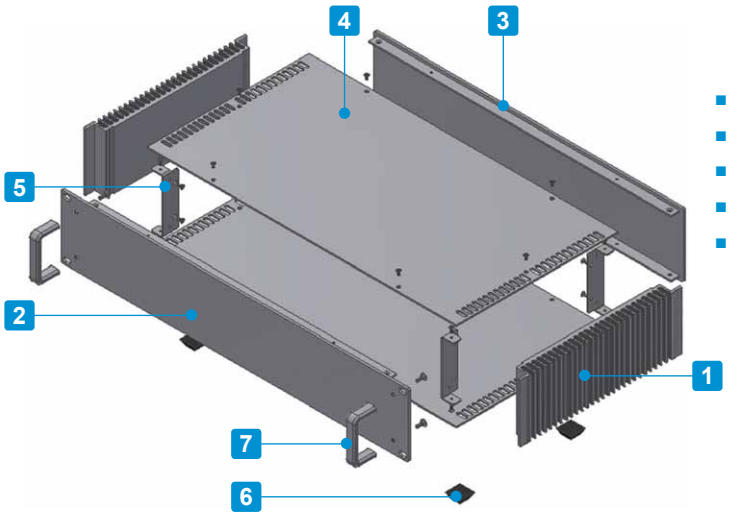

Technical Data
Protection class: IP40

- Equipped with handy rack mount / pull out handles.
- Available in 8 sizes, and 2 different colors.
- Excellent cooling performance with the heat-sink side plates.
- Tough and robust enclosure from using aluminium extrusion parts.
- Simple and easy to assemble construction.

Components

No.	Part name	Pcs	Material	Color / Finish
1	Heat-sink side plate	2	Extruded aluminium A6063S-T5	Silver • Black / Anodized
2	Front panel	1	Extruded aluminium A6063S-T5	Silver • Black / Hairline brushed & Anodized
3	Rear panel	1	Extruded aluminium A6063S-T5	Silver • Black / Hairline brushed & Anodized
4	Top • Bottom cover	2	Aluminium A1050P t=2.0	Silver • Black / Hairline brushed & Anodized
5	Corner support	4	Steel SPCC t=1.6	Trivalent chromate
6	Rubber feet	4	Polyurethane	Black
7	Handle	2	Extruded aluminium A6063S-T5	Silver • Black / Anodized
–	Screw	1 set	Steel	Nickel plated · Black trivalent chromate

Accessories (Optional parts)

Mounting plate HYC series
See page HYC • HYCL-1

L-bracket HYCL series
See page HYC • HYCL-1

TORX screw MR3-5Z series
See page HY • HYR • HYRH-2

HYRH dimensions (outside view)

■ Drawings below are reference examples only.
DXF/DWG/PDF drawings available on our website.

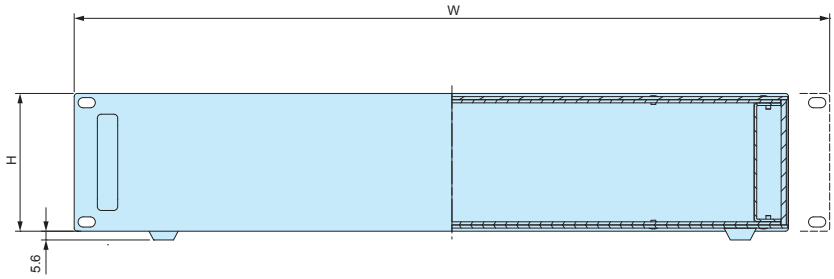

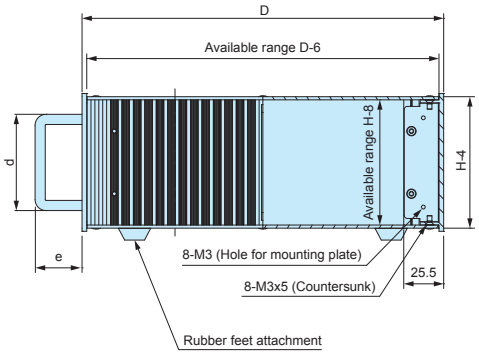

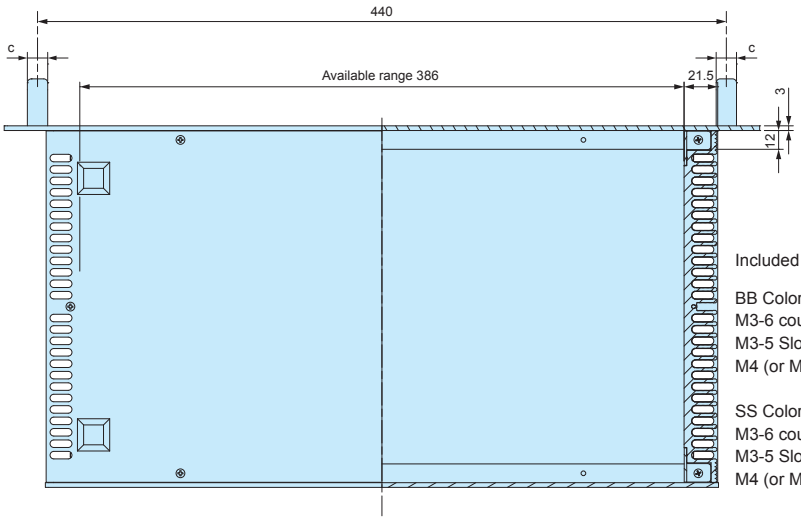

Included screws

BB Color type
M3-6 countersunk screw, black trivalent chromate x 16 pcs
M3-5 Slotted raised countersunk screw, black trivalent chromate x 12 pcs
M4 (or M5) countersunk screw, trivalent chromate x 4 pcs

SS Color type
M3-6 countersunk screw, nickel plated x 16 pcs
M3-5 Slotted raised countersunk screw, nickel plated x 12 pcs
M4 (or M5) countersunk screw, trivalent chromate x 4 pcs

Product no.		W	H	D	c	d	e	Standard	Weight (kg)
○ Silver	● Black								
HYRH 44-43-23SS	HYRH 44-43-23BB	482.6	44	231	12	41.0	40	EIA	2.0
HYRH 44-43-33SS	HYRH 44-43-33BB	482.6	44	330	12	41.0	40	EIA	2.6
HYRH 88-43-23SS	HYRH 88-43-23BB	482.6	88	231	13	61.5	30	EIA	2.8
HYRH 88-43-33SS	HYRH 88-43-33BB	482.6	88	330	13	61.5	30	EIA	3.7
HYRH133-43-23SS	HYRH133-43-23BB	482.6	132.5	231	13	106.5	30	EIA	3.6
HYRH133-43-33SS	HYRH133-43-33BB	482.6	132.5	330	13	106.5	30	EIA	4.8
HYRH177-43-23SS	HYRH177-43-23BB	482.6	177	231	13	126.5	30	EIA	4.6
HYRH177-43-33SS	HYRH177-43-33BB	482.6	177	330	13	126.5	30	EIA	5.9

HY dimensions (outside view)

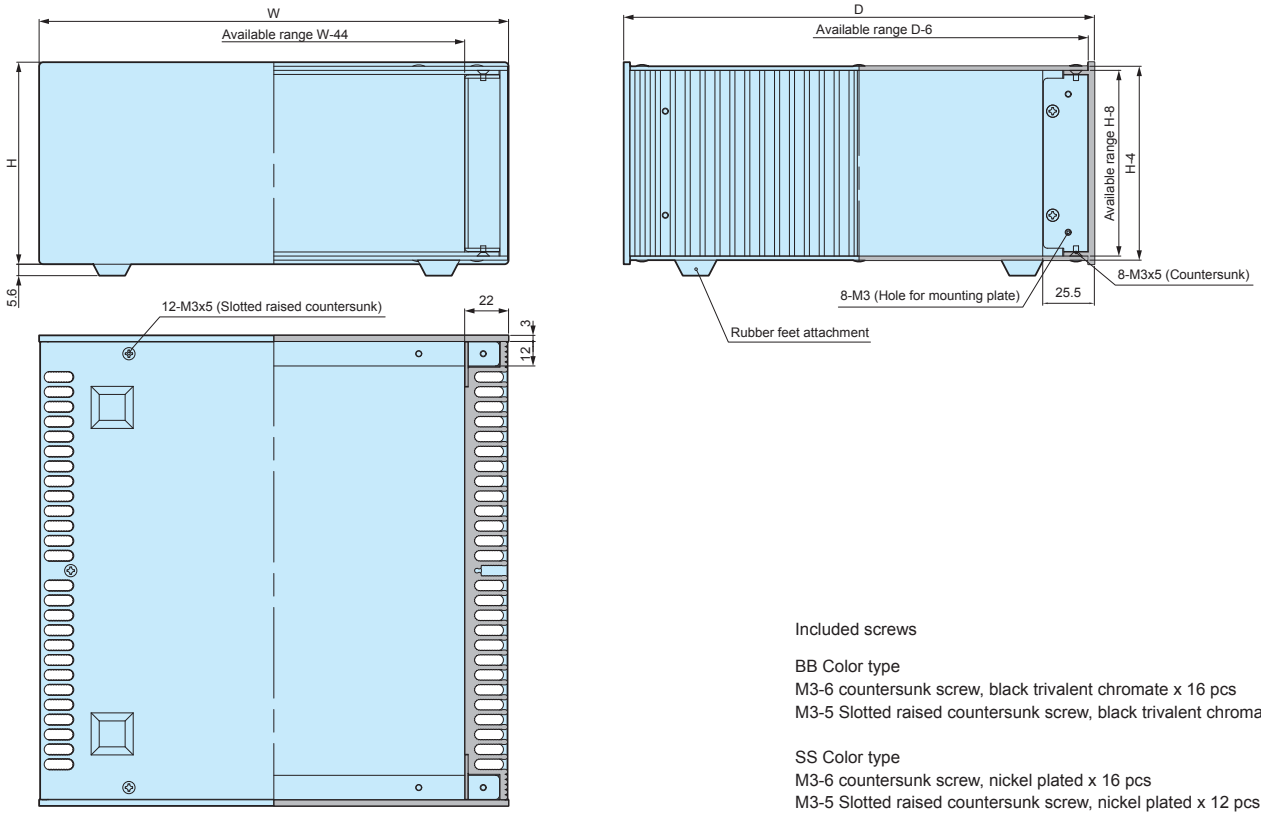

Included screws

BB Color type
M3-6 countersunk screw, black trivalent chromate x 16 pcs
M3-5 Slotted raised countersunk screw, black trivalent chromate x 12 pcs

SS Color type
M3-6 countersunk screw, nickel plated x 16 pcs
M3-5 Slotted raised countersunk screw, nickel plated x 12 pcs

Component Parts Drawings

HY • HYR • HYRH top / bottom cover

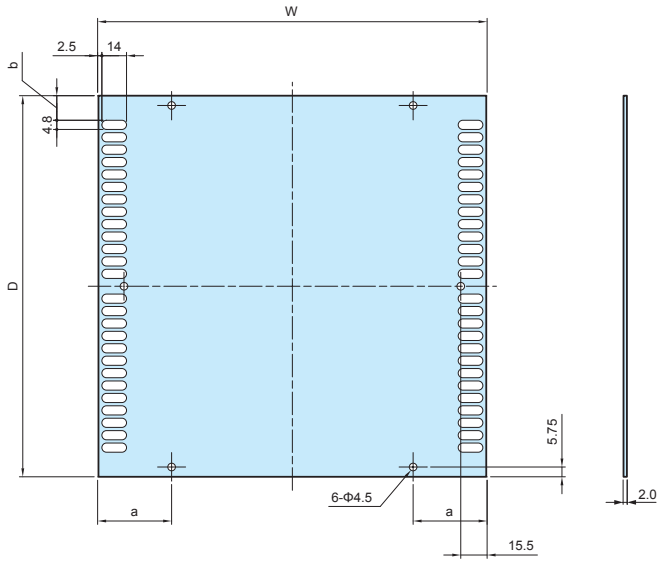

Color Type

Code	Material	Color / Finish
SS	Aluminium A1050P t = 2.0	Silver / Hairline brushed & Anodized
BB	Aluminium A1050P t = 2.0	Black / Hairline brushed & Anodized

Dimensions

Enclosure W x D	W	D	a	b
230 × 231	229	224.5	45.7	14.95
230 × 330	229	323.5	45.7	15.1
280 × 231	279	224.5	55.8	14.95
280 × 330	279	323.5	55.8	15.1
330 × 231	329	224.5	65.8	14.95
330 × 330	329	323.5	65.8	15.1
430 × 231	429	224.5	85.8	14.95
430 × 330	429	323.5	85.8	15.1

HY front / rear panels & HYR • HYRH rear panel

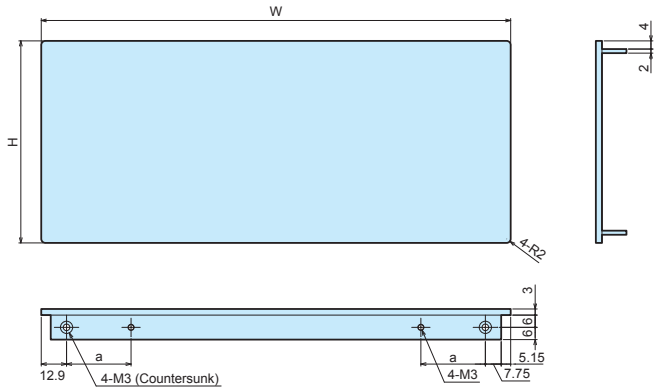

Color Type

Code	Material	Color / Finish
SS	Extruded aluminium A6063S-T5	Silver / Hairline brushed & Anodized
BB	Extruded aluminium A6063S-T5	Black / Hairline brushed & Anodized

Dimensions

Enclosure W	W	a	H(44)	H(70)	H(88)	H(99)	H(132.5)	H(149)	H(177)
230	230	33.3	44	70	88	99	132.5	149	177
280	280	43.4	44	70	88	99	132.5	149	177
330	330	53.4	44	70	88	99	132.5	149	177
430	430	73.4	44	70	88	99	132.5	149	177

HY • HYR • HYRH heat-sink side plate

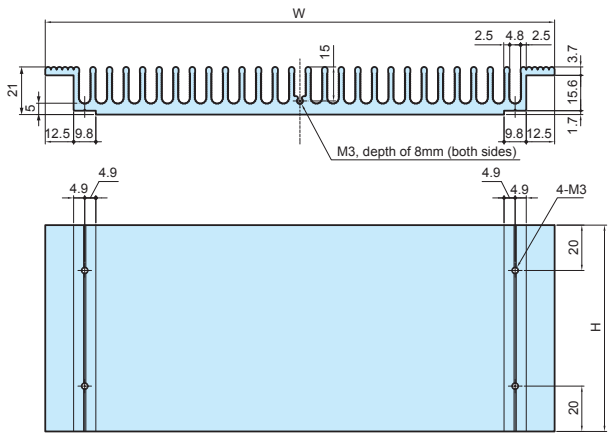

Color Type

Code	Material	Color / Finish
SS	Extruded aluminium A6063S-T5	Silver / Anodized
BB	Extruded aluminium A6063S-T5	Black / Anodized

Dimensions

Enclosure D x H	W	H	Thermal resistance (°C/W)
231 × 44	224.6	36	2.41
330 × 44	323.6	36	1.89
231 × 70	224.6	62	1.49
330 × 70	323.6	62	1.36
231 × 88	224.6	80	1.49
330 × 88	323.6	80	1.17
231 × 99	224.6	91	1.38
330 × 99	323.6	91	1.08
231 × 132.5	224.6	124.5	1.14
330 × 132.5	323.6	124.5	0.89
231 × 149	224.6	141	1.06
330 × 149	323.6	141	0.83
231 × 177	224.6	169	0.95
330 × 177	323.6	169	0.74

■ Thermal resistance calculation is based on the fins being perpendicular to the ground with temperature at 60°C.

HY • HYR • HYRH corner support

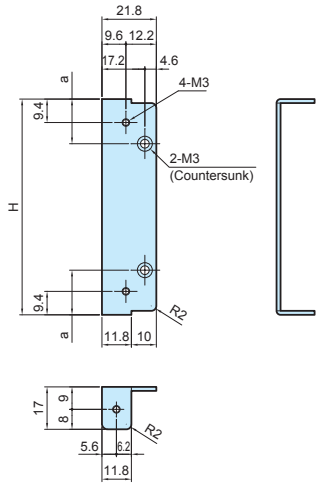

Part Information

Part name	Material	Finish
Corner support	Steel t=1.6	Trivalent chromate

Dimensions

Enclosure H	H	a
44	31.8	10.9
70	57.8	17.9
88	75.8	17.9
99	86.8	17.9
132.5	120.3	17.9
149	136.8	17.9
177	164.8	17.9

HY • HYR • HYRH rubber feet

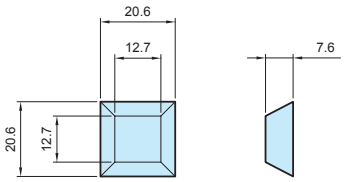

Part Information

Part name	Material	Color
Rubber feet	Polyurethane	Black

Accessories (Optional parts)

MR SERIES SLOTTED RAISED COUNTERSUNK TORX SCREW

- For use with top/bottom cover.
- Recommended for aesthetic purposes, or for tampering resistance.
- Requires the use of a specialized screwdriver.

Product no. / Dimensions

Product no.	M	L	TORX head no.	Material	Color / Finish	Pack of
MR3-5ZS	3	5	T10	Steel	Nickel plated	20
MR3-5ZB	3	5	T10	Steel	Black trivalent chromate	20

HYR front panel

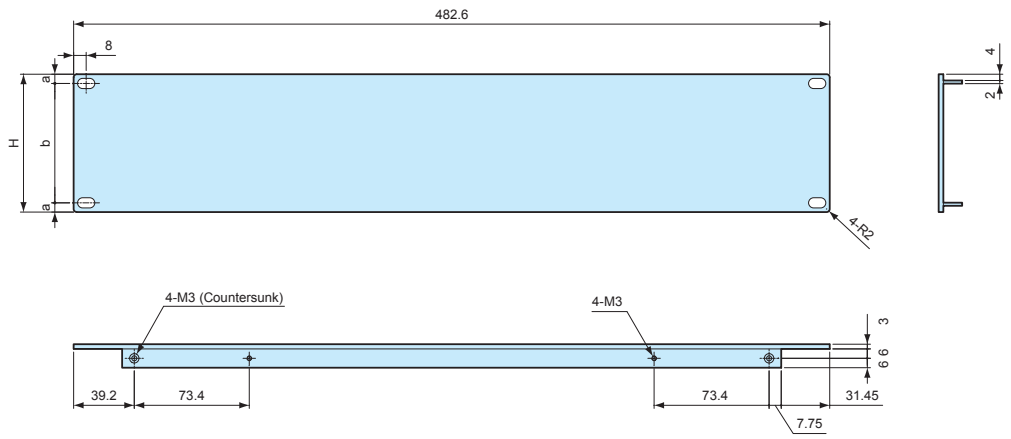

HYRH front panel

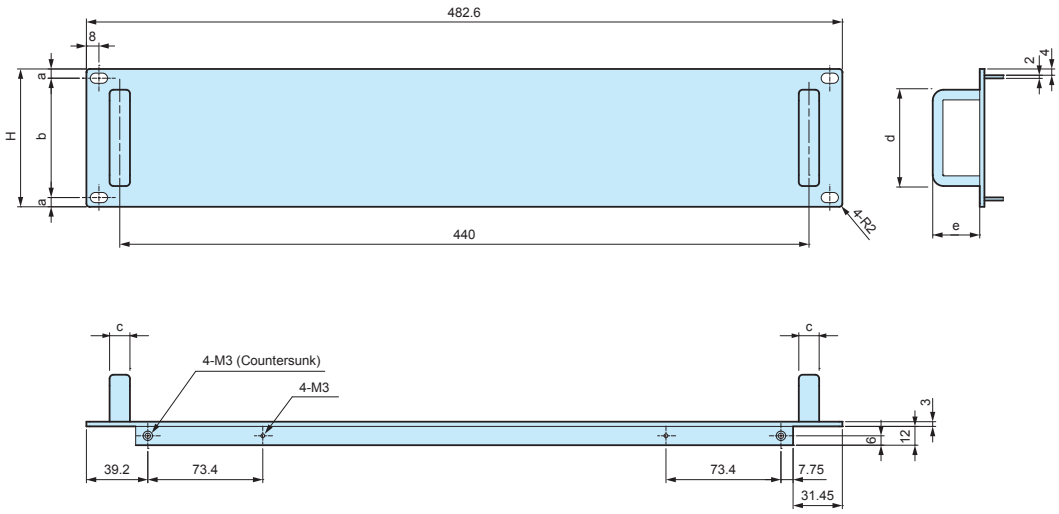

Color Type

Code	Material	Color / Finish
SS	Extruded aluminium A6063S-T5	Silver / Hairline brushed & Anodized
BB	Extruded aluminium A6063S-T5	Black / Hairline brushed & Anodized

Product no.	H	a	b	c	d	e
HYR/HYRH 44-43-23□	44	6.1	31.8	12	41	40
HYR/HYRH 44-43-33□	44	6.1	31.8	12	41	40
HYR/HYRH 88-43-23□	88	5.9	76.2	13	61.5	30
HYR/HYRH 88-43-33□	88	5.9	76.2	13	61.5	30
HYR/HYRH133-43-23□	132.5	37.7	57.1	13	106.5	30
HYR/HYRH133-43-33□	132.5	37.7	57.1	13	106.5	30
HYR/HYRH177-43-23□	177	37.7	101.6	13	126.5	30
HYR/HYRH177-43-33□	177	37.7	101.6	13	126.5	30

HYC SERIES MOUNTING PLATE for HY · HYR · HYRH

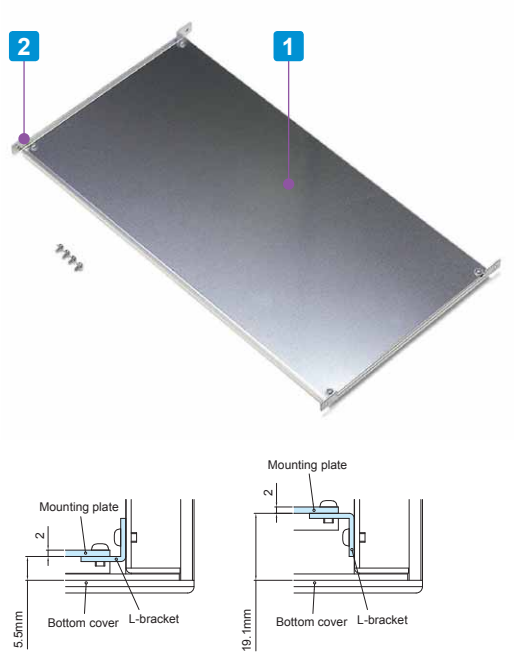

■ Mounting plate and L-bracket set.

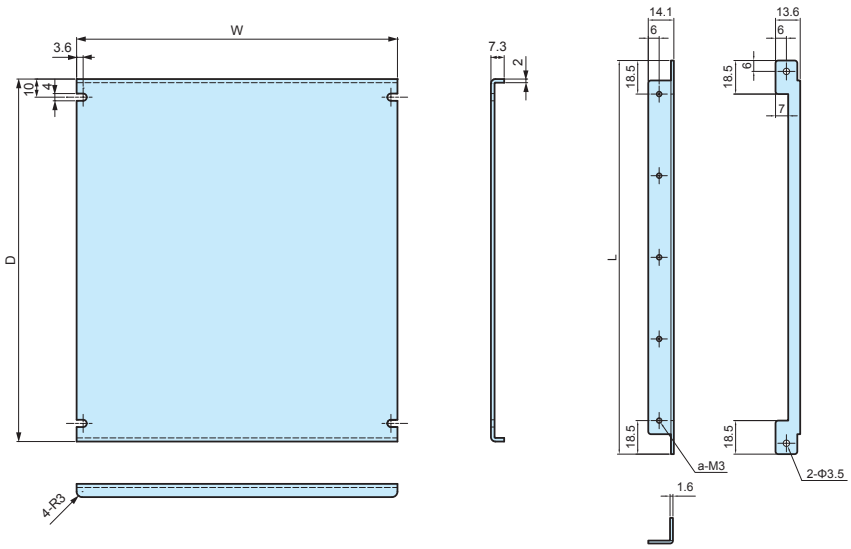

Components

No.	Part name	Pcs	Material	Color / Finish
1	Mounting plate	1	Aluminium A1050P t=2.0	Unfinished
2	L-bracket	2	Steel SPCC t=1.6	Tivalent chromate
?	Screw	1 set	Steel M3	Tivalent chromate

Product no. / Dimensions

Product no.	W	D	L	a	Suitable models	Weight (g)
HYC23-23	177	200	217	5	HY□-23-23	300
HYC23-28	227	200	217	5	HY□-28-23	350
HYC23-33	277	200	217	5	HY□-33-23	410
HYC23-43	377	200	217	5	HY□-43-23	520
HYC33-23	177	299	316	7	HY□-23-33	450
HYC33-28	227	299	316	7	HY□-28-33	550
HYC33-33	277	299	316	7	HY□-33-33	710
HYC33-43	377	299	316	7	HY□-43-33	800

Clinching stud customization service available.

HYCL SERIES L-bracket for HY • HYR • HYRH

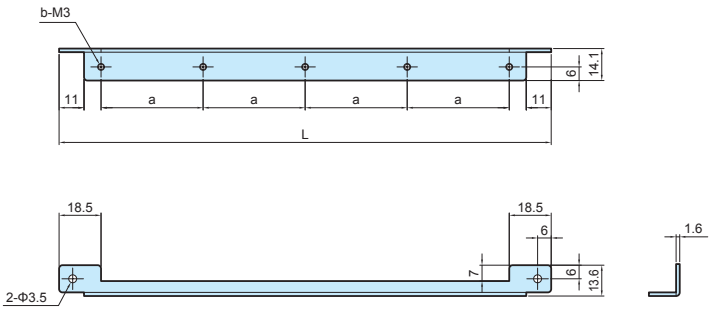

■ Simple L-bracket and screw set.

■ Use with your original mounting plate or PCB.

Components

No.	Part name	Material	Color / Finish
1	L-bracket	Steel t=1.6	Tivalent chromate
2	Screw	Steel M3	Tivalent chromate

Product no. / Dimensions

Product no.	L	a	b	Pack of
HYCL-23	217	45	5	2
HYCL-33	316	46.5	7	2

TAKACHI

TAKACHI ELECTRONICS ENCLOSURE CO., LTD.

3-21-16 Higashi-ryoke, Kawaguchi-shi, Saitama, 332-0003 JAPAN

Tel. +81-48-222-5409 / Fax. +81-48-222-7652

January 30, 2023

NOTICE

Material, Color, and Color Code Change

Affected series and changes:

■ **Material Change :** **MY series**

Holder	: PC + ABS	→ ABS
Grip + Blind Cap	: PP + Elastomer	→ Elastomer

■ **Color Change :** **MS, MO, MSN, MON, MSY, MOY, MSR, MOR, MN, MY, MSM series**

■ **Color Code Change :** **MS, MO, MSN, MON, MSY, MOY, MSR, MOR series**

Click below illustrations to check Current (Old) and New colors on your browser.

Current (Old) Color Code : G | **New Color Code : GS**

MS・MO series

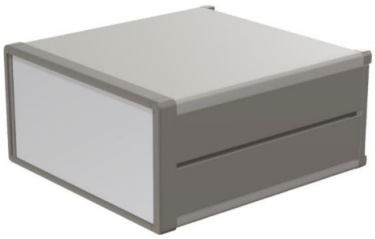

MS・MO series

MSN・MON series

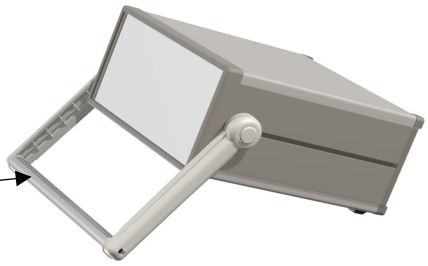

MN series
Tip-Up Handle

MSN・MON series

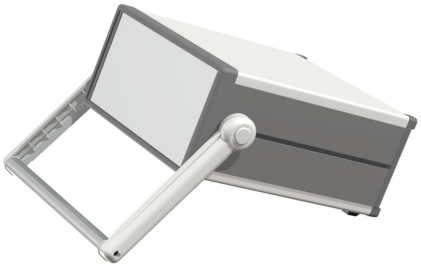

MSY・MOY series

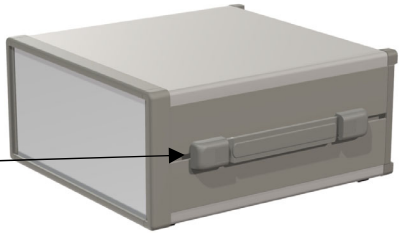

MY series
Carrying Handle

MSY・MOY series

MSR・MOR series

MSM series
Rack Mount Bracket

MSR・MOR series

■ Functionality: No changes to functionality, size / dimensions, or finish.

■ Purpose: To ensure consistent quality throughout via streamlined supply chain and materials.

■ Period: 2023 July.

■ No changes to pricing.

Thank you for your understanding.

For more information, kindly contact us at: sales@takachi-el.co.jp

MSR SERIES RACK MOUNT ENCLOSURE

MSR dimensions

- 16 different sizes available.
- Screws are hidden out of view for a sophisticated and elegant look.
- Easy to punch or mill holes on both front and rear panels.

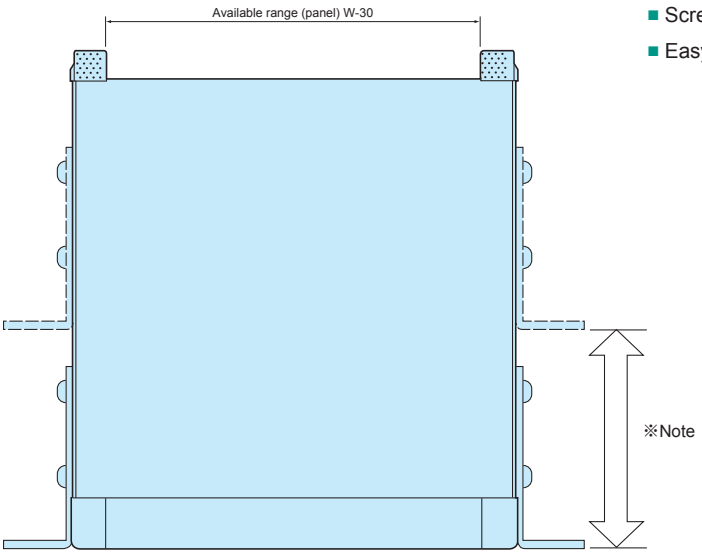

- Drawings below are reference examples only.
  DXF/DWG/PDF drawings available on our website.

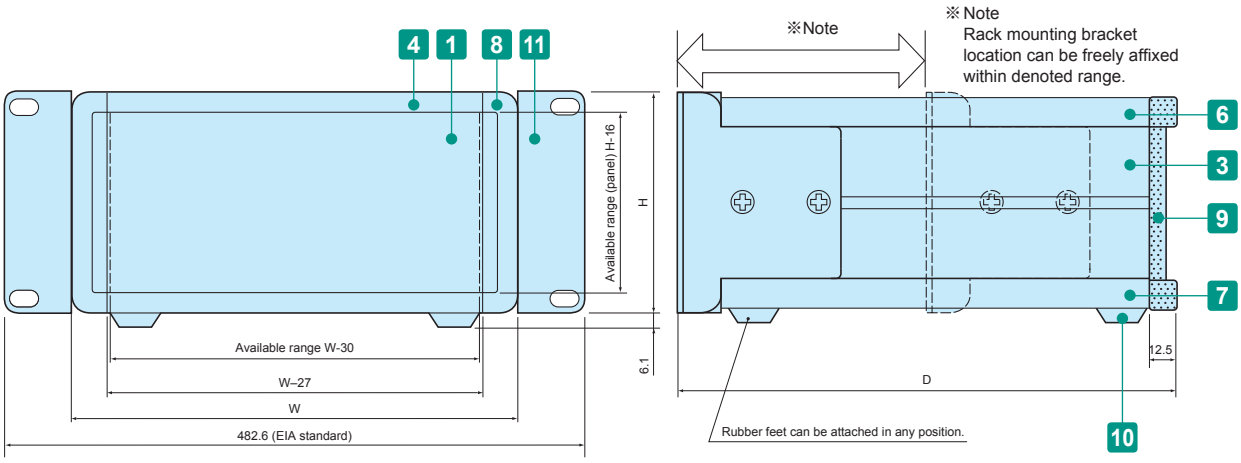

Components

■ Refer to page 250 for more information on rack mounting bracket.

No.	Part name	Pcs	Material	Color / Finish
1	Front panel	1	Aluminium A1050P t=2.0	Silver • Black / Hairline brushed & Anodized
–	Rear panel	1	Aluminium A1050P t=2.0	Silver • Black / Anodized
3	Side frame	2	Extruded aluminium A6063S-T5	Gray • Black / Painted
4	Front frame	2	Extruded aluminium A6063S-T5	Gray • Black / Painted
–	Rear frame	2	Extruded aluminium A6063S-T5	Silver / Anodized
6	Top cover	1	Steel SPCC t=1.0	Light gray • Black / Painted
7	Bottom cover	1	Steel SPCC t=1.0	Light gray • Black / Painted
8	Corner block	2	Diecast aluminium ADC12	Gray • Black / Painted
9	Rear feet	2	ABS UL94V-0	Gray • Black
10	Rubber feet	4	Polyurethane	Black
11	Rack mounting bracket	2	Extruded aluminium A6063S-T5	Gray • Black painted

■ Note: Front / rear panels are covered with a protective film on one side. Remove before assembly.

Included screws and nuts
M4-6 countersunk • Trivalent chromate x 4 pcs
M4-8 Pan head • Trivalent chromate x 8 pcs
M4-10 Binding head • Black trivalent chromate x 4 pcs
M5-10 Flat head • Black trivalent chromate x 4 pcs
M5 Nut (Product no. MZ-5) x 4 pcs

Accessories (Optional parts)

Mounting plate MSC series
See page MSC • MSCL-1

L-bracket MSCL series
See page MSC • MSCL-1

Aluminium handle OH series
See page OH • KH-1

Cable hook CBF series
See page TL • CBF-1

Color Type

■ Please suffix color code at the end of the product number.

● G		● B		◓ BS	
Panel	Silver	Panel	Black	Panel	Silver
Top • Bottom cover	Light gray	Top • Bottom cover	Black	Top • Bottom cover	Black
Side frame	Gray	Side frame	Black	Side frame	Black

Product no. / Dimensions

Product no.	H	W	D	Weight (kg)
MSR 88-43-23□	88	430	230	3.1
MSR 88-43-28□	88	430	280	3.5
MSR 88-43-35□	88	430	350	4.2
MSR 88-43-45□	88	430	450	5.1
MSR133-43-23□	132.5	430	230	3.6
MSR133-43-28□	132.5	430	280	4.1
MSR133-43-35□	132.5	430	350	4.8
MSR133-43-45□	132.5	430	450	5.8
MSR177-43-23□	177	430	230	4.3
MSR177-43-28□	177	430	280	4.9
MSR177-43-35□	177	430	350	5.7
MSR177-43-45□	177	430	450	6.9
MSR222-43-23□	221.5	430	230	4.7
MSR222-43-28□	221.5	430	280	5.3
MSR222-43-35□	221.5	430	350	6.2
MSR222-43-45□	221.5	430	450	7.5

MOR SERIES SYSTEM RACK MOUNT CASE

- Available in 3 different colors and 16 different sizes.
- Lightweight system rack mount case.
- Screws are hidden out of view for a sophisticated and elegant look.

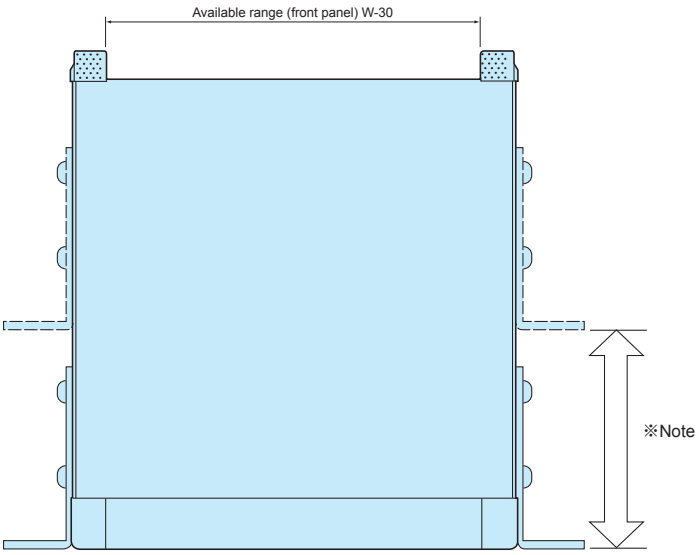

- Drawings below are reference examples only. DXF/DWG/PDF drawings available on our website.

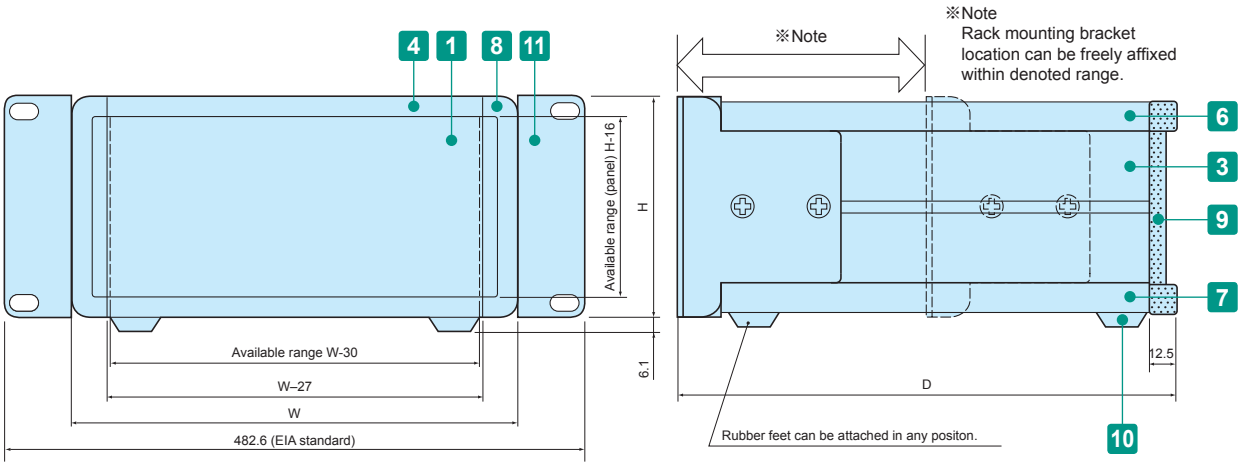

Components

No.	Part name	Pcs	Material	Color / Finish
1	Front panel	1	Aluminium A1050P t=2.0	Silver • Black / Hairline brushed & Anodized
2	Rear panel	1	Aluminium A1050P t=2.0	Silver • Black / Anodized
3	Side frame	2	Extruded aluminium A6063S-T5	Gray • Black / Painted
4	Front frame	2	Extruded aluminium A6063S-T5	Gray • Black / Painted
5	Rear frame	2	Extruded aluminium A6063S-T5	Silver / Anodized
6	Top cover	1	Aluminium A1100P t=1.0	Light gray • Black / Painted
7	Bottom cover	1	Aluminium A1100P t=1.0	Light gray • Black / Painted
8	Corner block	2	Diecast aluminium ADC12	Gray • Black / Painted
9	Rear feet	2	ABS UL94V-0	Gray • Black
10	Rubber feet	4	Polyurethane	Black
11	Rack mount bracket	2	Extruded aluminium A6063S-T5	Gray • Black / Painted

■ Note: Front / rear panels and top / bottom covers are covered with a protective film on one side. Remove before assembly.

Included screws and nuts
M4-6 countersunk • Trivalent chromate x 4 pcs
M4-8 Pan head • Trivalent chromate x 8 pcs
M4-10 Binding head • Black trivalent chromate x 4 pcs
M5-10 Flat head • Black trivalent chromate x 4 pcs
M5 nut (Product no. MZ-5) x 4 pcs

Accessories (Optional parts)

Mounting plate MSC series
See page MSC • MSCL-1

L-bracket MSCL series
See page MSC • MSCL-1

Aluminium handle OH series
See page OH • KH-1

Cable hook CBF series
See page TL • CBF-1

Color Type

G

Panel	Silver
Top • Bottom cover	Light Gray
Side frame	Gray

B

Panel	Black
Top • Bottom cover	Black
Side frame	Black

BS

Panel	Silver
Top • Bottom cover	Black
Side frame	Black

■ Please suffix color code at the end of the product number.

Product no. / Dimensions

Product no.	H	W	D	Weight (kg)
MOR 88-43-23 □	88	430	230	2.2
MOR 88-43-28 □	88	430	280	2.4
MOR 88-43-35 □	88	430	350	2.8
MOR 88-43-45 □	88	430	450	3.4
MOR133-43-23 □	132.5	430	230	2.7
MOR133-43-28 □	132.5	430	280	3.0
MOR133-43-35 □	132.5	430	350	3.4
MOR133-43-45 □	132.5	430	450	4.0
MOR177-43-23 □	177	430	230	3.4
MOR177-43-28 □	177	430	280	3.7
MOR177-43-35 □	177	430	350	4.3
MOR177-43-45 □	177	430	450	5.0
MOR222-43-23 □	221.5	430	230	3.8
MOR222-43-28 □	221.5	430	280	4.1
MOR222-43-35 □	221.5	430	350	4.7
MOR222-43-45 □	221.5	430	450	5.6

MSC SERIES — MOUNTING PLATE for MS • MSN • MSY • MSR • MO • MON • MOY • MOR

■ DXF/DWG/PDF drawings available on our website.

■ 1 set = Mounting plate + L-bracket

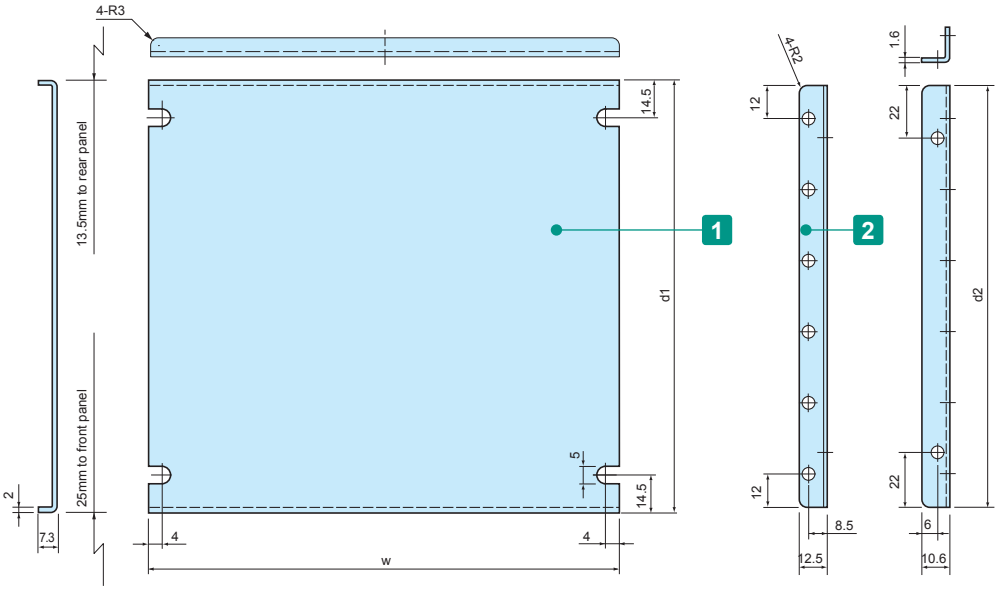

Mounting example

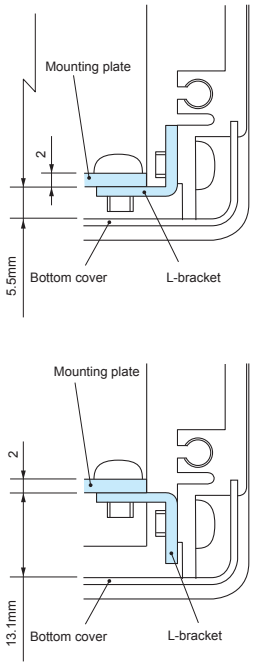

Components

No.	Part name	Pcs	Material	Color / Finish
1	Mounting plate	1	Aluminium A1050P t=2.0	Unfinished
2	L-bracket	2	Steel SPCC	Trivalent chromate

Included screws: M4-6 pan head, trivalent chromate x8

Product no. / Dimensions

Product no.	w	d_1	d_2	Enclosure W×D	Weight (g)
MSC16-16	130	96.5	91.5	160 × 160	120
MSC16-23	130	166.5	161.5	160 × 230	210
MSC16-28	130	216.5	211.5	160 × 280	270
MSC21-16	180	96.5	91.5	210 × 160	150
MSC21-23	180	166.5	161.5	210 × 230	250
MSC21-28	180	216.5	211.5	210 × 280	330
MSC21-35	180	286.5	281.5	210 × 350	430
MSC26-23	230	166.5	161.5	260 × 230	300
MSC26-28	230	216.5	211.5	260 × 280	390
MSC26-35	230	286.5	281.5	260 × 350	510
MSC32-23	290	166.5	161.5	320 × 230	360

Product no.	w	d_1	d_2	Enclosure W×D	Weight (g)
MSC32-28	290	216.5	211.5	320 × 280	460
MSC32-35	290	286.5	281.5	320 × 350	600
MSC32-45	290	386.5	381.5	320 × 450	810
MSC37-23	340	166.5	161.5	370 × 230	410
MSC37-28	340	216.5	211.5	370 × 280	520
MSC37-35	340	286.5	281.5	370 × 350	680
MSC37-45	340	386.5	381.5	370 × 450	910
MSC43-23	400	166.5	161.5	430 × 230	460
MSC43-28	400	216.5	211.5	430 × 280	590
MSC43-35	400	286.5	281.5	430 × 350	770
MSC43-45	400	386.5	381.5	430 × 450	1,040

MSCL SERIES — L-BRACKET for MS • MSN • MSY • MSR • MO • MON • MOY • MOR

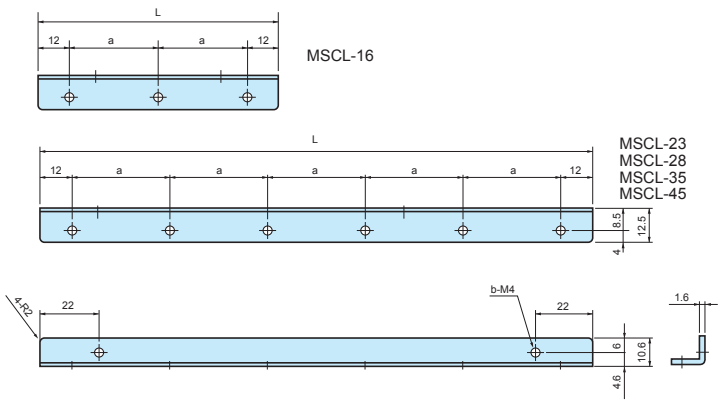

■ Use with your original mounting plate or PCB.

■ 1 pair of L-bracket are included with each MSC mounting plate.

Components

Part name	Material	Color / Finish
L-bracket	Steel SPCC	Trivalent chromate

Product no. / Dimensions

Product no.	L	a	b	Sales unit
MSCL-16	91.5	33.75	5	1 set (2 pcs)
MSCL-23	161.5	27.5	8	1 set (2 pcs)
MSCL-28	211.5	37.5	8	1 set (2 pcs)
MSCL-35	281.5	51.5	8	1 set (2 pcs)
MSCL-45	381.5	71.5	8	1 set (2 pcs)

MSM SERIES RACK MOUNT BRACKET

Components

Material	Color / Finish
Extruded aluminium A6063S-T5	Gray • Black / Painted

Included screws : M5-10 Flat head x 4 pcs / Black trivalent chromate + Nut x 4 pcs

Color Type

Color code	Material	Color / Finish
G	Extruded aluminium A6063S-T5	Gray / Painted
B	Extruded aluminium A6063S-T5	Black / Painted

Product no. / Dimensions

Product no.	h (Enclosure H)	a	Pack of
MSM- 88□	88	76.2	2
MSM-133□	132.5	57.1	2
MSM-177□	177	101.6	2
MSM-222□	221.5	146	2

■ Please suffix color code at the end of the product number.

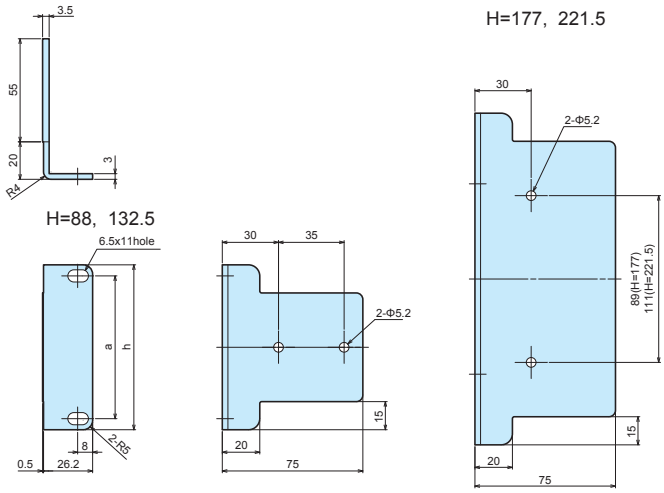

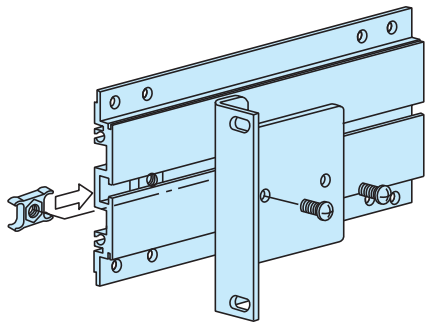

MZ SERIES SIDE FRAME NUT

■ Side frame nut for MS • MSN • MSY • MSR • MO • MON • MOY • MOR series.

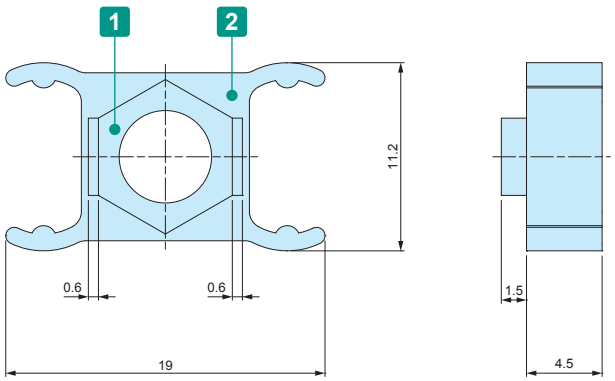

Components

No.	Part name	Material	Color / Finish
1	Nut	Brass • Steel	Nickel plated
2	Holder	Polyethylene	Black

Product no. / Feature

Product no.	Screw size	Nut material	Pack of
MZ-4	M4	Brass	10
MZ-5	M5	Steel	10

TL series TILT LEG

TL dimensions

■ DXF/DWG/PDF drawings available on our website.

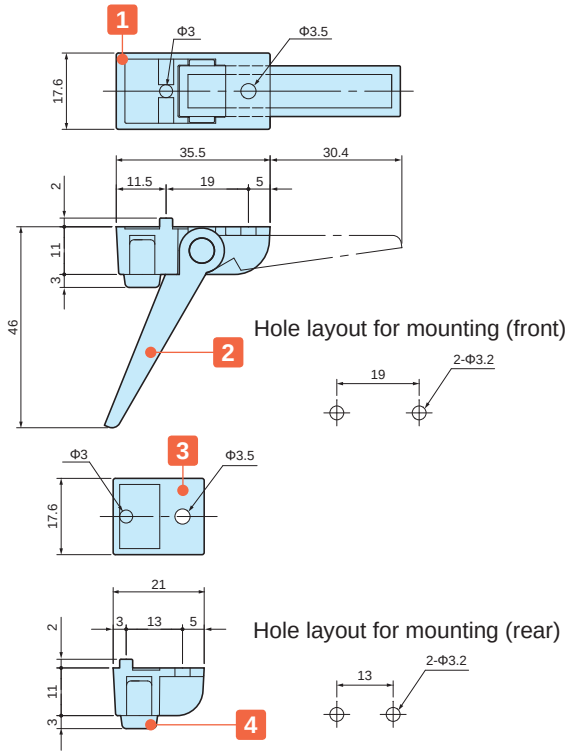

Components

＊Maximum load = 7 kg

No.	Part name	Pcs	Material	Color / Finish
1	Front feet	2	ABS UL94HB	Black • Gray • Light gray
2	Leg	2	ABS UL94HB	Black • Gray • Light gray
3	Rear feet	2	ABS UL94HB	Black • Gray • Light gray
4	Rubber feet	4	EPDM	Gray • Black
–	Screw	4	Steel	Black trivalent chromate

■ Included screws: M3-8 and M3 nut (with washer) set.

Product no. / Dimensions

Product no.	Color (body)	Color (rubber feet)	Sales unit
● TL-45BB	Black	Black	1 set
● TL-45GG	Gray	Gray	1 set
● TL-45SG	Light gray	Gray	1 set

■ EPDM (black) may have its color migrate onto the placement surface.

MS SERIES INSTALLATION AREA

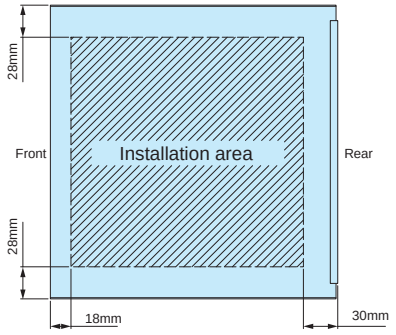

CBF-1G CABLE HOOK

APPLICATION EXAMPLE

■ Used for wrapping and securing cords and wires.
■ Can be used with a variety of different enclosure series and models.
■ Requires a panel thickness of between 1.0 ~ 3.0mm.

Product no. / Dimensions

Product no.	Material	Color	Pack of
CBF-1G	ABS UL94HB	Gray	4

■ Included screws: M3-8 trivalent chromate (with washer) x 4 pcs

CBF dimensions

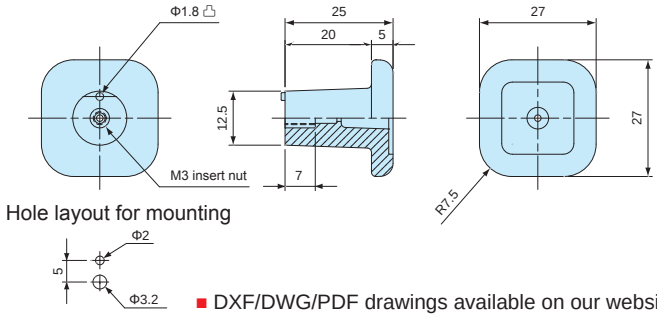

■ DXF/DWG/PDF drawings available on our website.

ER SERIES EIA RACK MOUNT ENCLOSURE

Assembly drawings

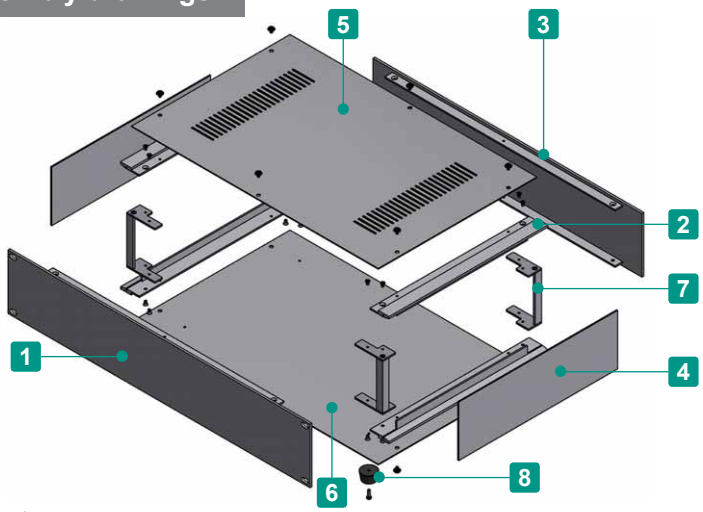

- Available in 35 different size combinations.
- Flat panels allows a wide range of customization to be performed easily, such as milling, inkjet printing, engraving and so on.
- 2 different color types available - Silver and Black.

Components

■ Refer to page AC-1 for AC series mounting plate

No.	Part name	Pcs	Material	Color / Finish
1	Panel	1	Extruded aluminium A6063S-T5	Silver • Black / Hairline brushed & Anodized
2	Frame	4	Extruded aluminium A6063S-T5	Silver • Black / Hairline brushed & Anodized
3	Rear panel	1	Extruded aluminium A6063S-T5	Silver • Black / Hairline brushed & Anodized
4	Side plate	2	Aluminium A1050P t = 1.5	Silver • Black / Hairline brushed & Anodized
5	Top cover	1	Steel SPCC t = 1.0	Black / Painted (leather tone)
6	Bottom cover	1	Steel SPCC t = 1.0	Black / Painted
7	Support bracket	4	Steel SPCC t = 2.0 • Extruded aluminium A6063S-T5	Trivalent chromate • Anodized
8	Rubber feet	4	Synthetic rubber	Black

■ Note: Side plates are covered with a protective film on one side. Remove before assembly.

APPLICATION EXAMPLE

PULSE SIGNAL DISTRIBUTOR

Product by FREQTIME (Japan)

Rear panel

TIME-FREQUENCY REMOTE CALIBRATION DEVICE

Rear panel

ER dimensions

■ DXF/DWG/PDF drawings available on our website.

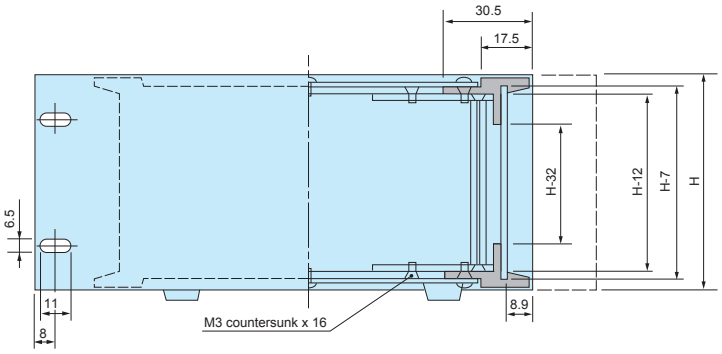

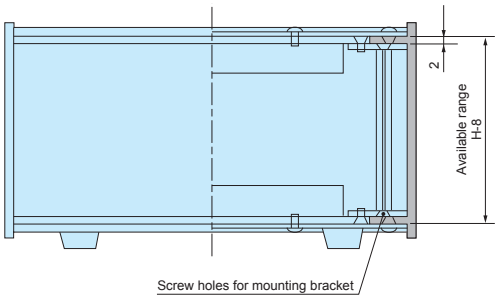

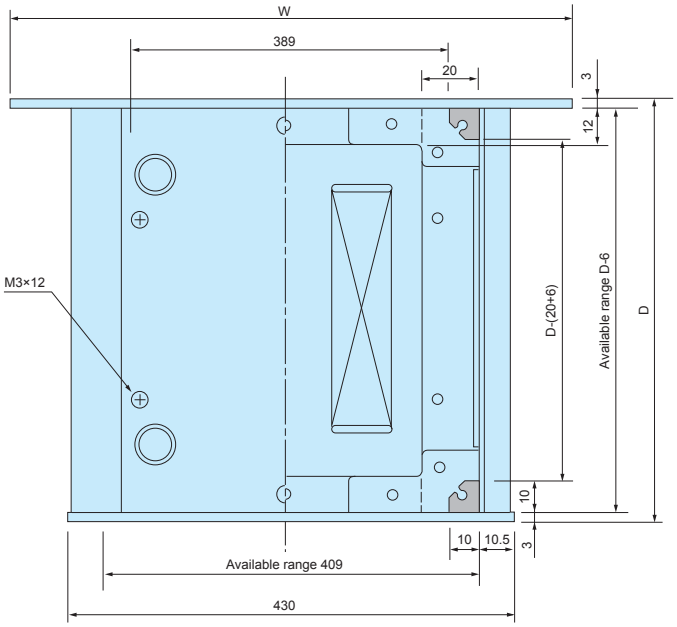

■ Available internal height is H - 29 when assembling AC mounting plate.

Included screws
M3-5 countersunk • Trivalent chromate x 17 pcs
M3-5 Binding head • Black trivalent chromate x 13 pcs
M3-10 Pan head • Trivalent chromate x 4 pcs

Color type

■ Please suffix color code at the end of the product number.

Code	Panel	Rear panel	Frame	Side plate	Top • Bottom cover
S	Silver	Silver	Silver	Silver	Black
B	Black	Black	Black	Black	Black

Product no. / Dimensions

Product no.	W	H	D	Weight (kg)
ER 44-16□	44	482.6	160	1.7
44-20□	44	482.6	200	2.0
44-26□	44	482.6	260	2.5
44-32□	44	482.6	320	2.9
44-37□	44	482.6	370	3.2
44-43□	44	482.6	430	3.7
44-50□	44	482.6	500	4.2
ER 88-16□	88	482.6	160	2.1
88-20□	88	482.6	200	2.5
88-26□	88	482.6	260	2.9
88-32□	88	482.6	320	3.4
88-37□	88	482.6	370	3.7
88-43□	88	482.6	430	4.2
88-50□	88	482.6	500	4.8
ER133-16□	132.5	482.6	160	2.5
133-20□	132.5	482.6	200	2.9
133-26□	132.5	482.6	260	3.3
133-32□	132.5	482.6	320	3.8

Product no.	W	H	D	Weight (kg)
ER133-37□	132.5	482.6	370	4.2
133-43□	132.5	482.6	430	4.7
133-50□	132.5	482.6	500	5.3
ER177-16□	177	482.6	160	2.8
177-20□	177	482.6	200	3.3
177-26□	177	482.6	260	3.8
177-32□	177	482.6	320	4.4
177-37□	177	482.6	370	4.8
177-43□	177	482.6	430	5.3
177-50□	177	482.6	500	5.9
ER222-16□	221.5	482.6	160	3.4
222-20□	221.5	482.6	200	3.8
222-26□	221.5	482.6	260	4.3
222-32□	221.5	482.6	320	4.8
222-37□	221.5	482.6	370	5.3
222-43□	221.5	482.6	430	5.8
222-50□	221.5	482.6	500	6.5

ERH SERIES EIA RACK MOUNT ENCLOSURE with HANDLE

Assembly drawings

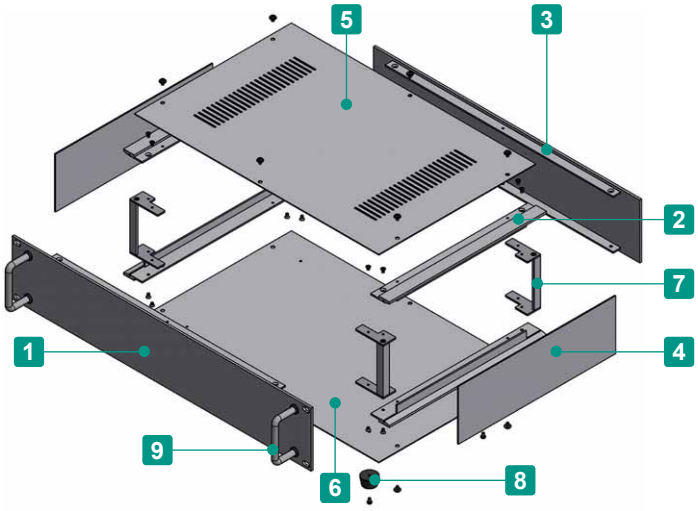

- Available in 35 different size combinations.
- Flat panels allows a wide range of customization to be performed easily, such as milling, inkjet printing, engraving and so on.
- 2 different color types available - Silver and Black.

Components

■ Refer to page AC-1 for AC series mounting plate

No.	Part name	Pcs	Material	Color / Finish
1	Panel	1	Extruded aluminium A6063S-T5	Silver • Black / Hairline brushed & Anodized
2	Frame	4	Extruded aluminium A6063S-T5	Silver • Black / Hairline brushed & Anodized
3	Rear panel	1	Extruded aluminium A6063S-T5	Silver • Black / Hairline brushed & Anodized
4	Side plate	2	Aluminium A1050P t = 1.5	Silver • Black / Hairline brushed & Anodized
5	Top cover	1	Steel SPCC t = 1.0	Black / Painted (leather tone)
6	Bottom cover	1	Steel SPCC t = 1.0	Black / Painted
7	Support bracket	4	Steel SPCC t = 2.0 • Extruded aluminium A6063S-T5	Trivalent chromate • Anodized
8	Rubber feet	4	Synthetic rubber	Black
9	Handle	2	Aluminium A5056S • Brass	Silver • Black / Anodized • Chrome plated

■ Note: Side plates are covered with a protective film on one side. Remove before assembly.

APPLICATION EXAMPLE

FM TRANSMITTER Product by Rough and Ready.Co.,Ltd. (Japan)

ERH dimensions

■ DXF/DWG/PDF drawings available on our website.

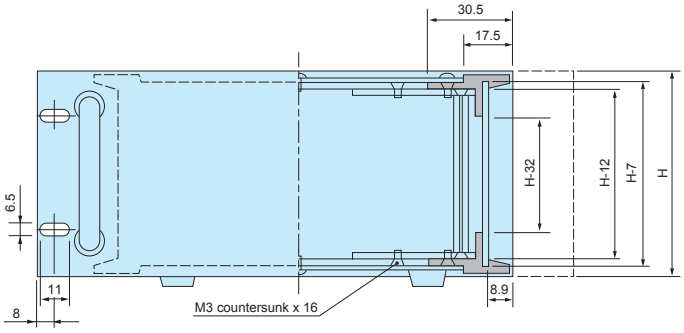

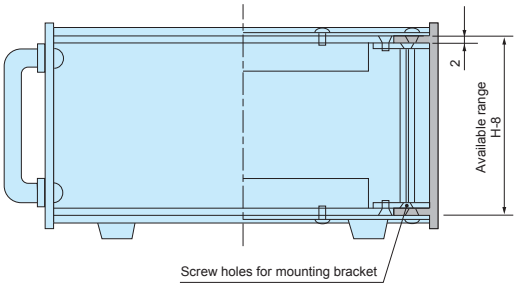

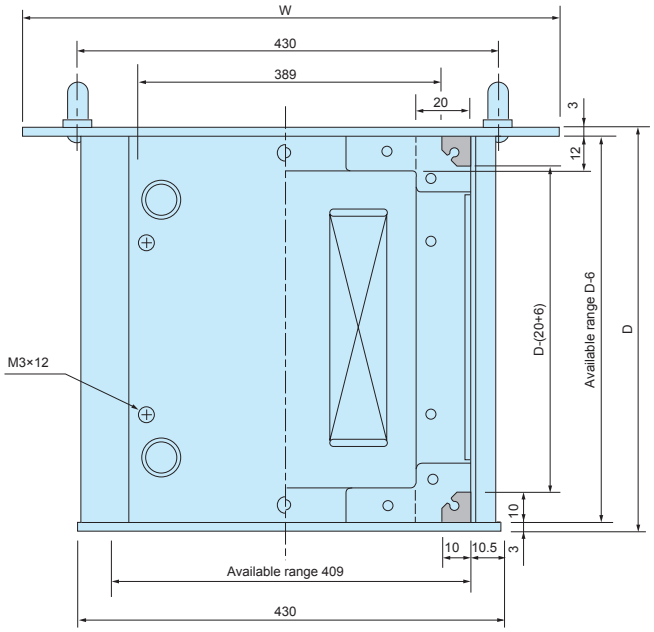

■ Available internal height is H - 29 when assembling AC mounting plate.

Included screws
M3-5 countersunk • Trivalent chromate x 17 pcs
M3-5 Binding head • Black trivalent chromate x 13 pcs
M3-10 Pan head • Trivalent chromate x 4 pcs

Color type

■ Please suffix color code at the end of the product number.

Code	Panel	Rear panel	Frame	Side plate	Top • Bottom cover
S	Silver	Silver	Silver	Silver	Black
B	Black	Black	Black	Black	Black

Product no. / Dimensions

Product no.	W	H	D	Weight (kg)
ERH 44-16□	44	482.6	160	1.7
44-20□	44	482.6	200	2.0
44-26□	44	482.6	260	2.5
44-32□	44	482.6	320	2.9
44-37□	44	482.6	370	3.2
44-43□	44	482.6	430	3.7
44-50□	44	482.6	500	4.2
ERH 88-16□	88	482.6	160	2.2
88-20□	88	482.6	200	2.5
88-26□	88	482.6	260	3.0
88-32□	88	482.6	320	3.4
88-37□	88	482.6	370	3.8
88-43□	88	482.6	430	4.2
88-50□	88	482.6	500	4.8
ERH133-16□	132.5	482.6	160	2.5
133-20□	132.5	482.6	200	2.9
133-26□	132.5	482.6	260	3.4
133-32□	132.5	482.6	320	3.9

Product no.	W	H	D	Weight (kg)
ERH133-37□	132.5	482.6	370	4.2
133-43□	132.5	482.6	430	4.7
133-50□	132.5	482.6	500	5.4
ERH177-16□	177	482.6	160	2.9
177-20□	177	482.6	200	3.4
177-26□	177	482.6	260	3.9
177-32□	177	482.6	320	4.4
177-37□	177	482.6	370	4.8
177-43□	177	482.6	430	5.4
177-50□	177	482.6	500	6.0
ERH222-16□	221.5	482.6	160	3.5
222-20□	221.5	482.6	200	3.9
222-26□	221.5	482.6	260	4.4
222-32□	221.5	482.6	320	4.9
222-37□	221.5	482.6	370	5.4
222-43□	221.5	482.6	430	5.9
222-50□	221.5	482.6	500	6.5

AC SERIES MOUNTING PLATE for ER • ERH

■ DXF/DWG/PDF drawings available on our website.

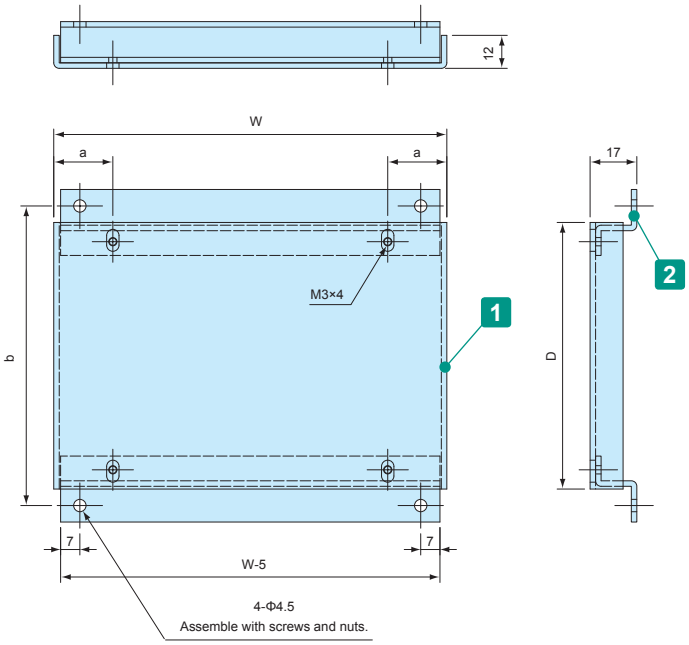

Assembly drawings

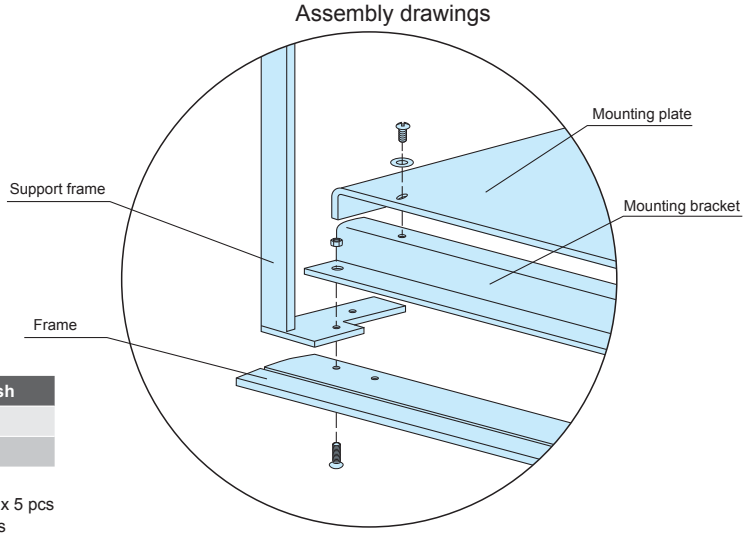

Components

No.	Part name	Pcs	Material	Color / Finish
1	Mounting plate	1	Aluminium A1050P t=2.0	Unfinished
2	Mounting bracket	2	Aluminium A1050P t=2.0	Unfinished

Included screws
M3-10 countersunk • Trivalent Chromate x 5 pcs
M3-6 Binding head • Nickel plated x 5 pcs
M3 washer • Nickel plated x 5 pcs
M3 nut • Trivalent Chromate x 5 pcs

Product no. / Dimensions

Product no.	W	D	a	b	Suitable enclosure	Weight (g)
AC16-43	143	367	21.5	379	ER□□-16 / ERH□□-16	370
AC20-43	183	367	24.5	379	ER□□-20 / ERH□□-20	460
AC26-43	243	367	31.5	379	ER□□-26 / ERH□□-26	610
AC32-43	303	367	39.5	379	ER□□-32 / ERH□□-32	740
AC37-43	353	367	46.5	379	ER□□-37 / ERH□□-37	860
AC43-43	413	367	54.5	379	ER□□-43 / ERH□□-43	990
AC50-43	483	367	64.5	379	ER□□-50 / ERH□□-50	1,160

AP SERIES EIA ALUMINIUM RACK PANEL

■ Standard aluminium panel for 19 inch rack.

■ Drawings below are reference examples only.
DXF/DWG/PDF drawings available on our website.

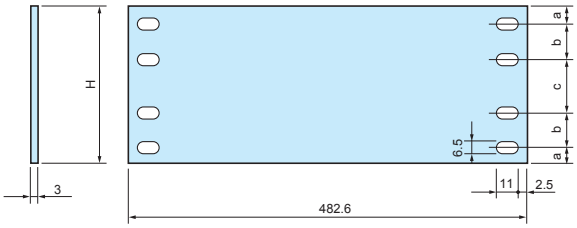

Product no. / Dimensions

Product no.		H	a	b	c	Mounting hole (One side)	Material	Surface finish	Weight (kg)
● Silver	● Black								
AP- 44S	AP- 44B	44	6.1	–	31.8	2	Extruded aluminium A6063S-T5	Hairline brushed & Anodized	0.18
AP- 88S	AP- 88B	88	5.9	–	76.2	2	Extruded aluminium A6063S-T5	Hairline brushed & Anodized	0.33
AP-133S	AP-133B	132.5	37.7	–	57.1	2	Extruded aluminium A6063S-T5	Hairline brushed & Anodized	0.48
AP-177S	AP-177B	177	37.7	–	101.6	2	Extruded aluminium A6063S-T5	Hairline brushed & Anodized	0.7
AP-222S	AP-222B	221.5	37.75	–	146	2	Aluminium A1050P	Hairline brushed & Anodized	0.87
AP-266S	AP-266B	265.9	37.7	57.2	76.1	4	Aluminium A1050P	Hairline brushed & Anodized	1.06
AP-311S	AP-311B	310.4	37.7	88.9	57.2	4	Aluminium A1050P	Hairline brushed & Anodized	1.24
AP-355S	AP-355B	354.8	37.7	101.6	76.2	4	Aluminium A1050P	Hairline brushed & Anodized	1.42

EP SERIES EIA EXTRUDED ALUMINIUM RACK PANEL

■ Extruded aluminium panel with reinforced rib for 19 inch rack.

■ Drawings below are reference examples only.
DXF/DWG/PDF drawings available on our website.

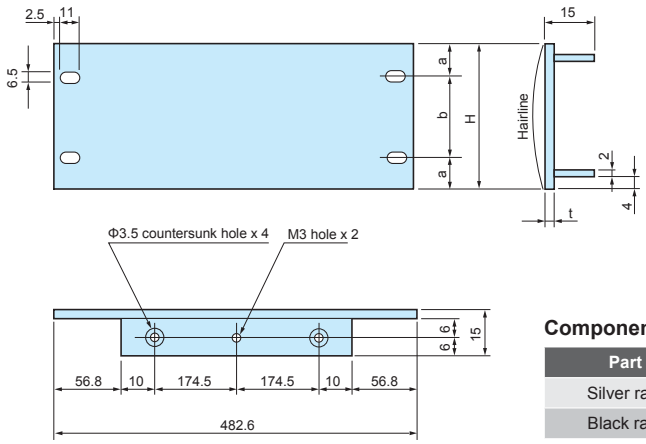

Components

Part name	Material	Surface finish
Silver rack panel	Extruded aluminium A6063S-T5	Hairline brushed & Anodized
Black rack panel	Extruded aluminium A6063S-T5	Hairline brushed & Anodized

Product no. / Dimensions

Product no.		H	a	b	t	Mounting hole (One side)	Weight (kg)
● Silver	● Black						
EP-3- 44S	EP-3- 44B	44	6.1	31.8	3.0	2	0.21
EP-3- 88S	EP-3- 88B	88	5.9	76.2	3.0	2	0.38
EP-3-133S	EP-3-133B	132.5	37.7	57.1	3.0	2	0.54
EP-3-177S	EP-3-177B	177	37.7	101.6	3.0	2	0.72
EP-3-222S	EP-3-222B	221.5	37.75	146	3.0	2	0.93

CUSTOMIZATION ON RACK PANEL

- CNC machining service is available from just 1 pc with a short lead time.
- Low-cost digital inkjet printing service is available for your customized front panel.
- Visit our website for more details.

- Anodizing and painting services are also available.

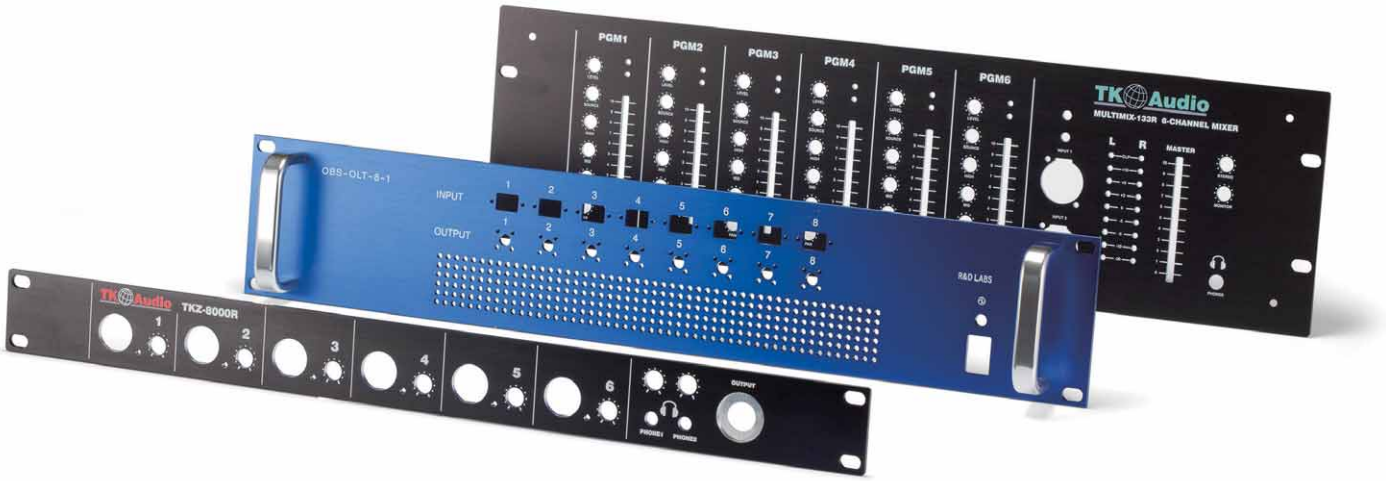

CNC MACHINING

CNC milling is a form of computer controlled machining. Similar in operation to drilling and cutting, it is able to create various hole styles and shapes by using a rotating cutting tool to bore into the object.

Extruded aluminium

- Mainly used for plastic, aluminium die-cast, and aluminium extrusion material types.
- Able to perform milling for various shapes and sizes.
- Recommended for small quantity customization.

Aluminium sheet

Diecast aluminium

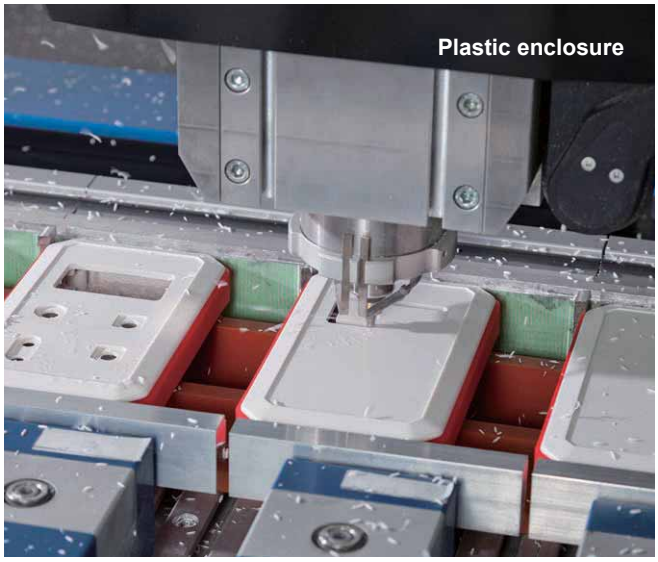
Plastic enclosure

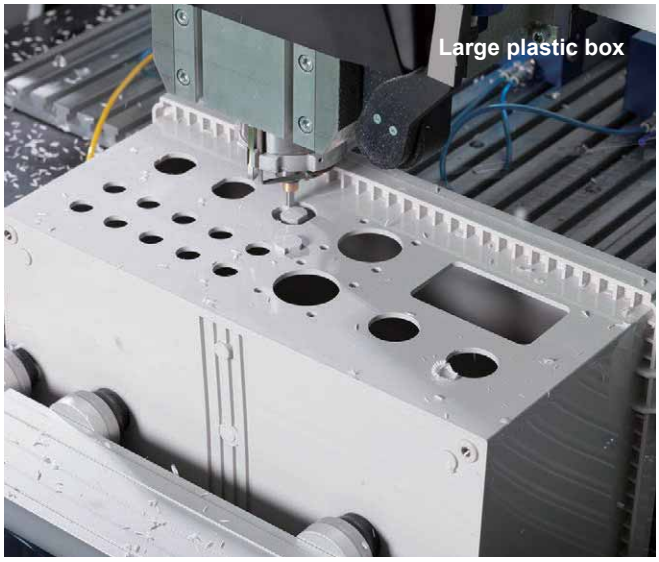
Large plastic box

ENGRAVING

By having the drill-head slightly milling the surface, the engraving of fine text or complex designs is able to be performed on a variety of surfaces, be it flat, curved, and so on.
Suitable for small batch print, and/or simple lettering. Font shall be similar to VAG Rounded font type.

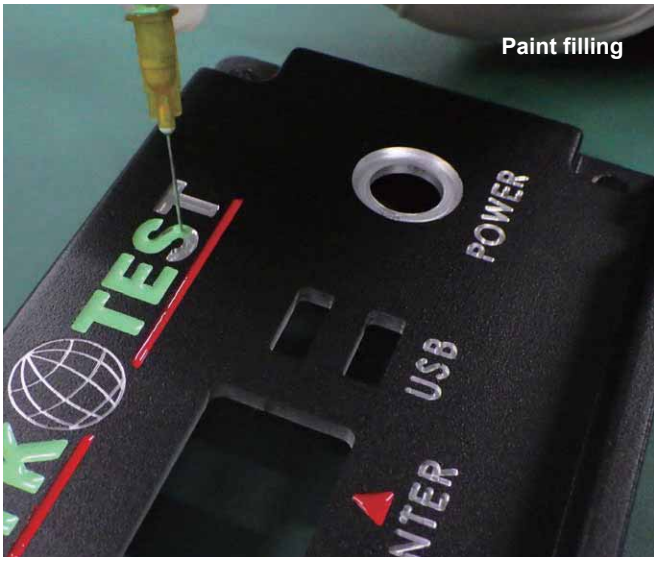

LASER CUTTING

Laser cutting utilizes a laser to perform cutting on an object, allowing various types and shapes of holes to be cut.
New fiber laser machine allows the processing of aluminium sheets with both high precision and speed.
Processing of Pure Aluminium 1050 is also possible with minimal burr as compared to conventional CO^2 laser machines, which causes excessive burring.

PUNCHING PRESS

What is punching press? It is a type of machine press used to cut holes in material via the use of various sized die sets.
Punching press allows the realization of high cost performance due to its high speed automated turret punching process, which significantly reduces machining lead-time.
Due to its ability to create designated sized holes by means of rapid multiple hole punches, this enables it to punch holes of various sizes and types quickly and efficiently.

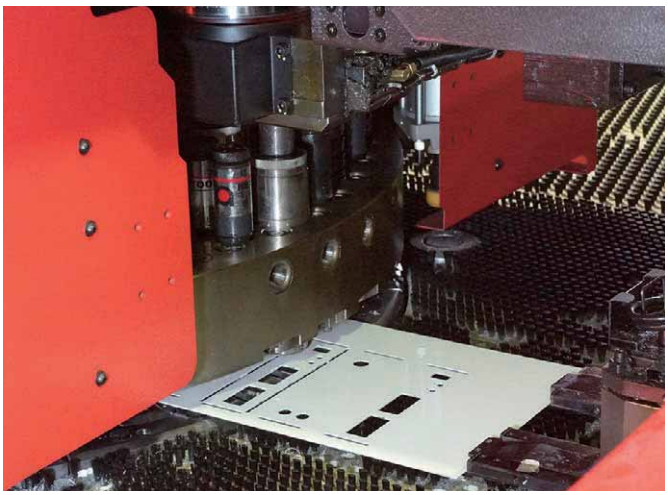

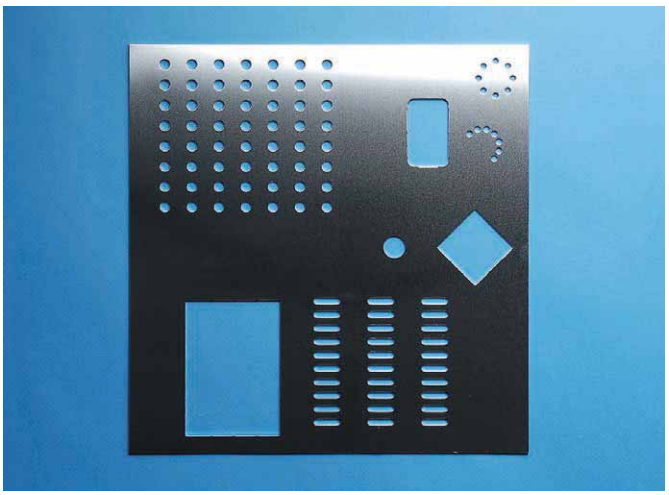

Circular hole

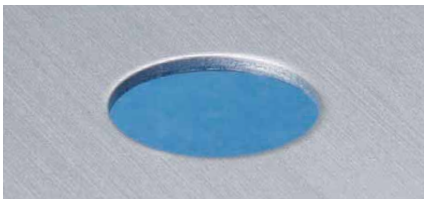

Circular holes as small as 1.0mm in diameter can be punched .

Nibbling press (rectangle)

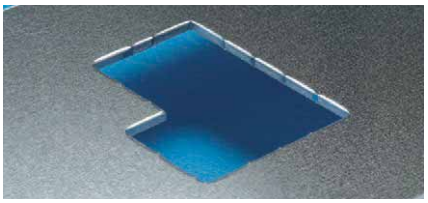

Complex or large rectangular shapes can be punched out with multiple presses.

Nibbling press (round)

Punching of large circular holes with multiple smaller die strokes.

Common connector shapes

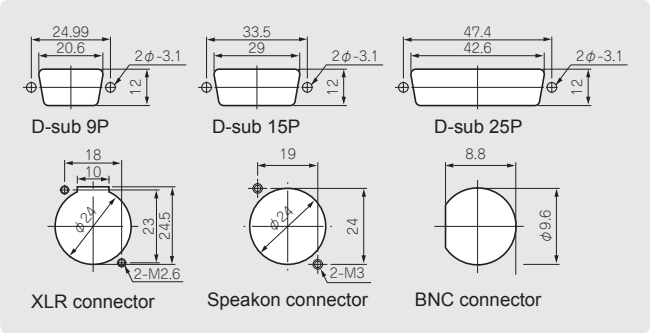

Unique shapes

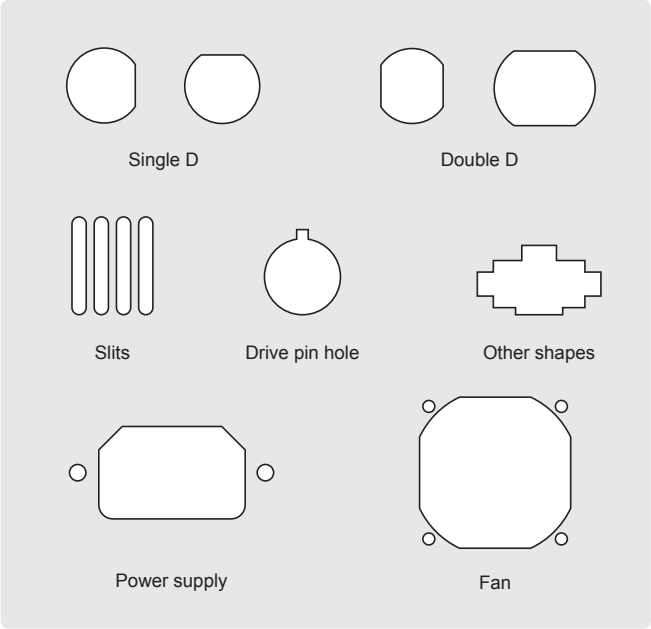

Burring punch

Increasing surface area on a thin metallic sheet for screw threads to bore into.

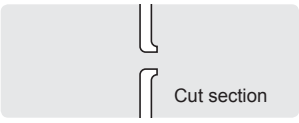

INKJET PRINTING

Full color digitally designed image can be printed in 1 run.
No cost difference regardless of the number of colors used.

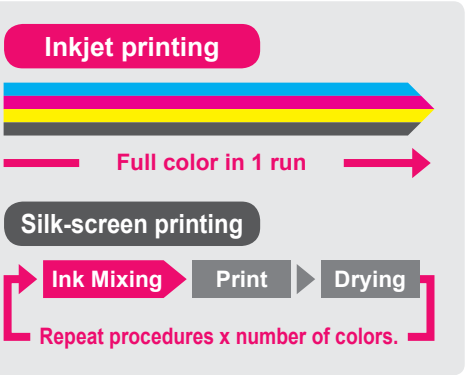

Low printing cost

Full color print possible in small quantities

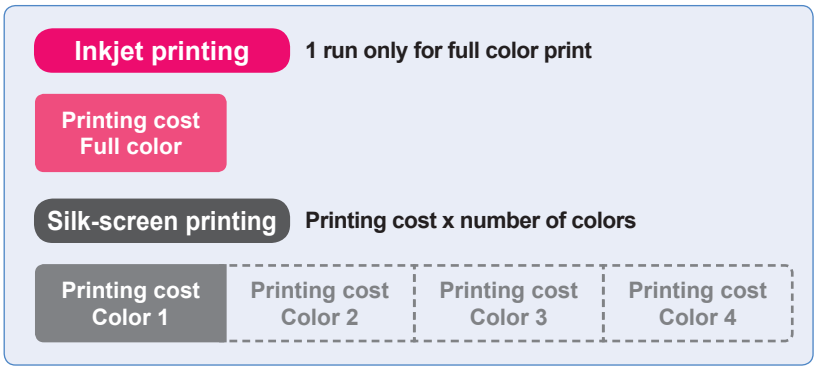

High quality printing of photo image and color gradation.

Print photo images in maximum 1,800 x 1,800 dpi quality.
Pictures, logos and unique designs with color gradation can be recreated in a high quality print.

Maximum printable enclosure size

D 420mm × W 594mm × H 270mm

Printable on surfaces with height differential

Printing is possible on recessed, sloped and rounded sections.

Gap difference is less than 2.0mm.

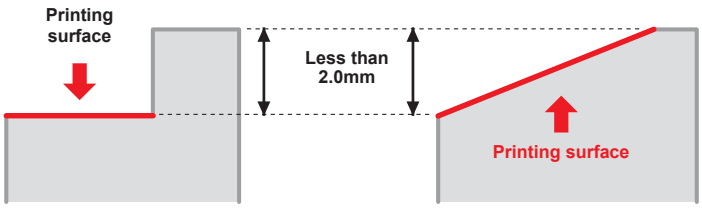

*Not suitable if height difference is more than 2.0mm.

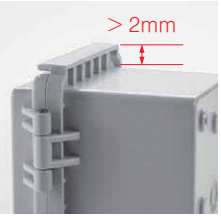

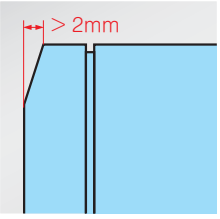

Printed example