NEW COMPACT PLASTIC CASE for NEXT GENERATION IoT

Stylish and elegant plastic case for use with all your IoT related devices

SIC•SIM series

Sleek & Glossy Finish High Performance Case

Multipurpose & Wall Mount Models Available

Multipurpose Model
SIC series

Wall Mount Model
SIM series

COMPACT PLASTIC CASE for IoT DEVICES

SIC • SIM series are snap-in type compact-sized plastic case without screws.
Despite the small size, ample internal space is achieved by a snap-in assembly construction.
A rounded design yet having flat surfaces enables easy customization such as hole milling or printing.
Ideal for small IoT appliances such as LoRa WAN or Sigfox power-saving communication devices, RFID or GPS gadgets, or network sensors.

Wall Mount Communication Network Device

RFID Reader

Remote Controller

Security Sensor

USB Data Logger

SIC series IoT SMALL PLASTIC CASE

NEW

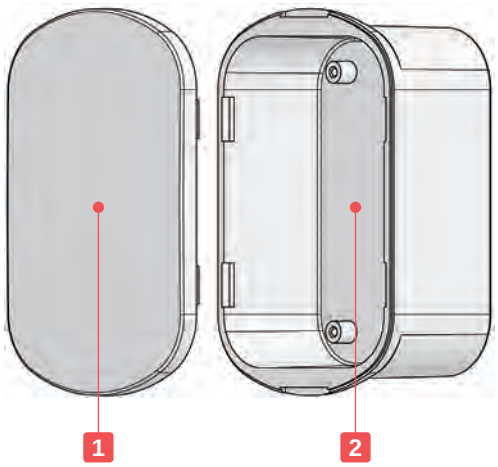

Technical Data
Protection class : IP40 Operating temperature Black (ABS) : -10°C ~ +60°C Off-white (ASA) : -30°C ~ +60°C

*May become brittle and break under impact when temperature is lowered close to -30°C.

- Small rounded design plastic case ideal for use as IoT devices.
- Easy and tool-less assembly snap-in case.
- While being small in size, there is ample internal space by utilization of the snap-in structure.
- The polished surface also provides a high-end finish and gives off a superior quality and feel while having superb cost performance.
- Off-white models are made of weather-resistant ASA material.
  Suitable for devices intending to be used under direct sunlight.

- Optional universal PCB, PCB32-53 is compatible with SIC5-7-2 and 5-7-3 models.
  See PCB series on our website for more details.

Components

No.	Part name	Pcs	Material	Color / Finish
1	Cover	1	ABS UL94HB	Black / Polished
			Weather-resistant ASA UL94HB	Off-white / Polished
2	Base	1	ABS UL94HB	Black / Polished
			Weather-resistant ASA UL94HB	Off-white / Polished

Accessories (Optional parts)

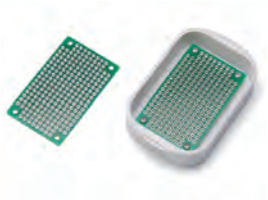

Universal PCB PCB series
See website

PCB mounting screw EM-2
See page 123

Neodymium magnet NMG series
See page 117

SIC dimensions

■ DXF/DWG/PDF/STP drawings available on our website.

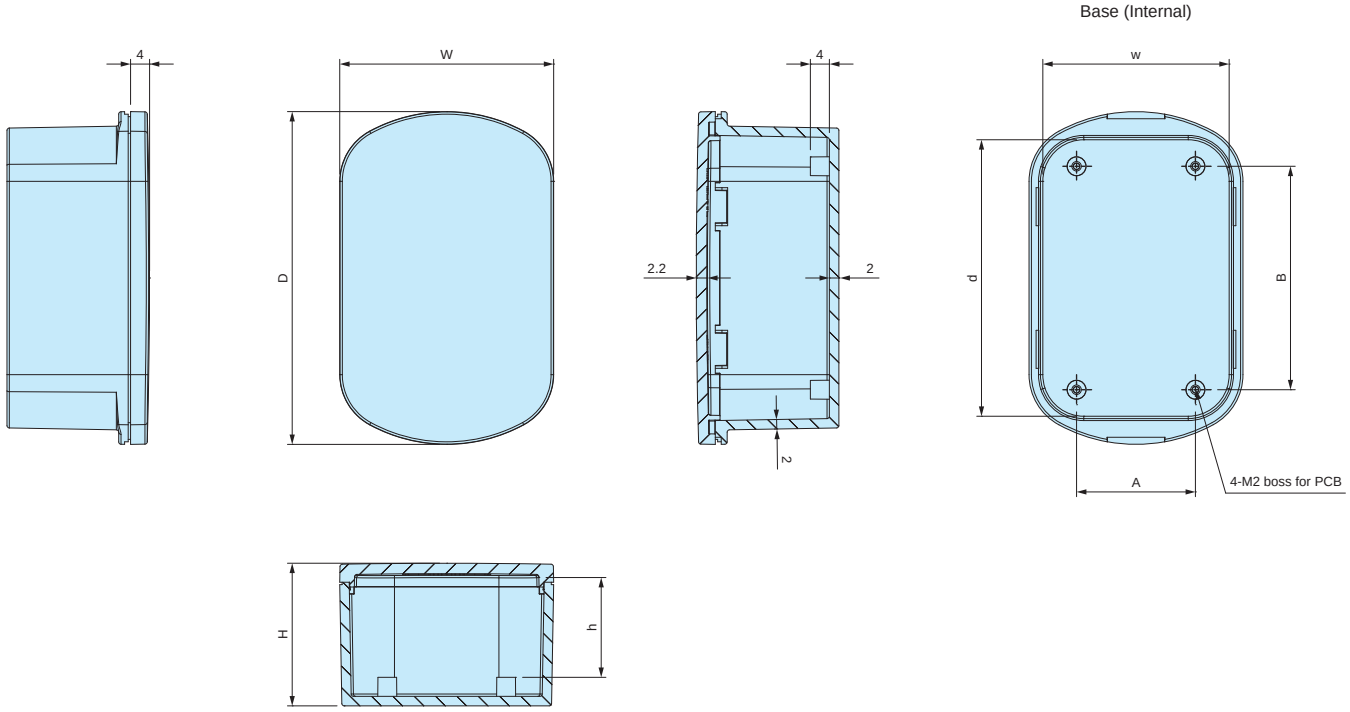

Product no. / Dimensions

Product no.		External dimensions			Internal dimensions			Boss pitch		Weight (g)
● Black	● Off-white	W	D	H	w	d	h	A	B	
SIC5-7-2B	SIC5-7-2W	45	70	20	39.5	58.5	10.9	25	47	20.1
SIC5-7-3B	SIC5-7-3W	45	70	30	39.1	58.1	20.9	25	47	24.1
SIC5-9-2B	SIC5-9-2W	45	90	20	39.5	78.5	10.9	25	67	24.9
SIC5-9-3B	SIC5-9-3W	45	90	30	39.1	78.1	20.9	25	67	29.4

Accessories (Optional parts) COIN CELL BATTERY HOLDERS

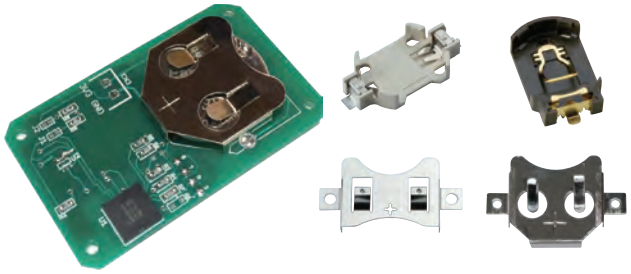

- Various coin cell battery holders can be utilized.
  See coin cell battery holders on our website for more details.
  Refer to the chart for compatible holders.
- Chart on the right is based upon mounting onto a 1.2mm thick PCB.
- Please note that depending on the mounting location, PCB may not be able to be properly affixed on.

COMPATIBLE COIN CELL BATTERY HOLDERS CHART

Product no.	Compatible coin cell battery holders
SIC5-7-2□ SIC5-9-2□	SMTU357 • 1220 (G) • 1225 • 1632 (G) • 2-2016 SMTU2032 (G) • 2430 • 2450 HU357 • 1220 • 1225 • 1632 • 2032 • 2430 • 2450 PB621, PD23, BCR20H4, BCR20H5, CH7410 BK-879, 5091, 5067, 888 SMTM1632, 2032
SIC5-7-3□ SIC5-9-3□	SMTU357 • 1220 (G) • 1225 • 1632 (G) • 2-2016 SMTU2032 (G) • 2430 • 2450 • 2477 HU357 • 1220 • 1225 • 1632 • 2032 • 2430 • 2450 • 2477 PB621, PD23, BCR20H4 • 20H5, BH-50N, CH7410 BK-879, 5091, 5067, 888 SMTM1632 • 2032

SIM series WALL MOUNT IoT SMALL PLASTIC CASE NEW

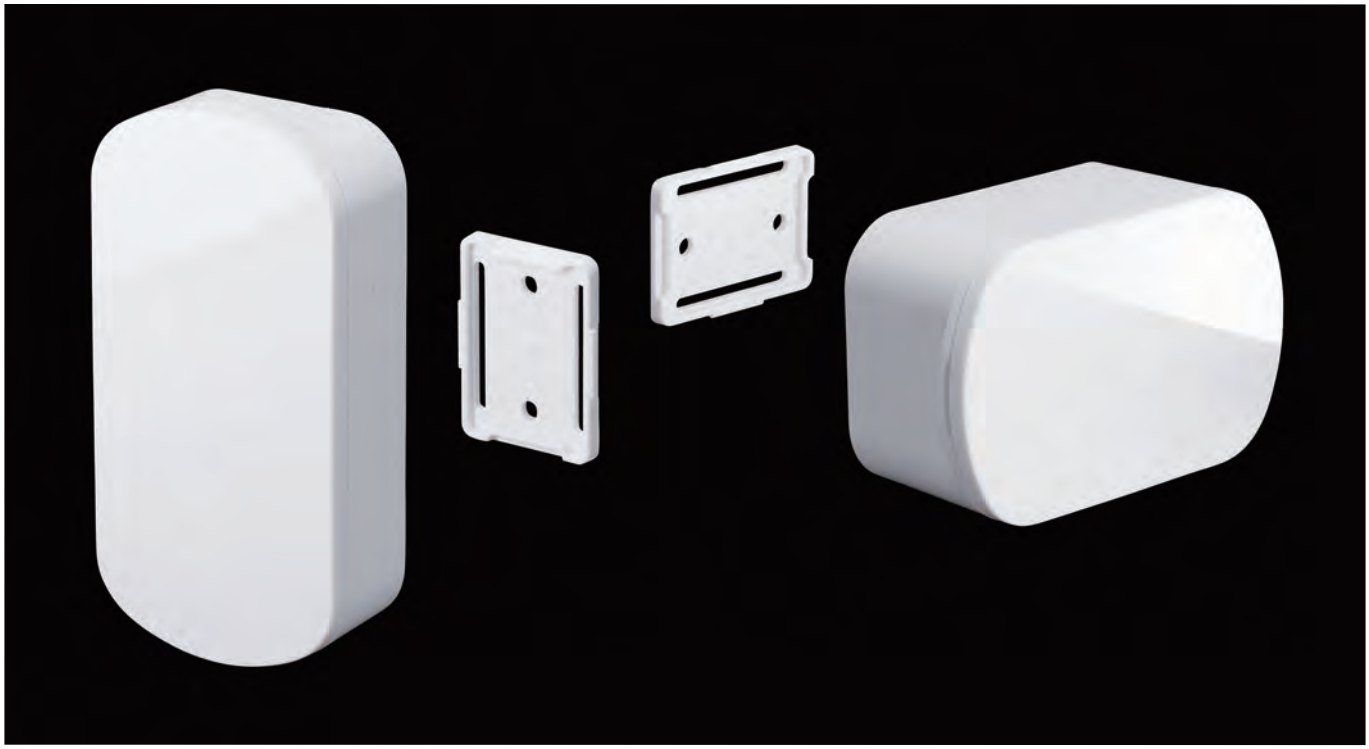

Technical Data
Protection class: IP40 Operating temperature: -30°C ~ +60°C

*May become brittle and break under impact when temperature is lowered close to -30°C.

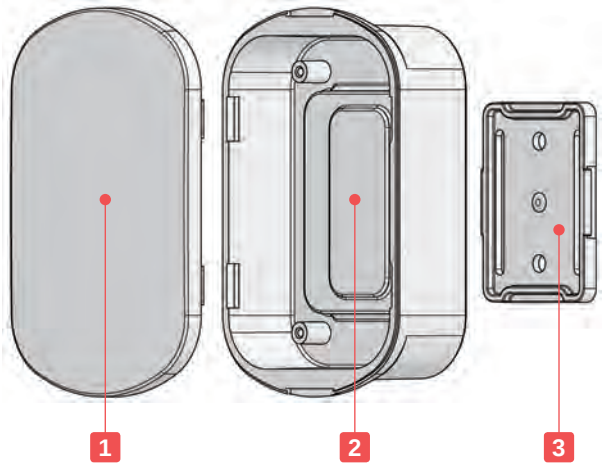

- Small rounded design plastic case ideal for use as IoT devices.
- Easily attached to, or detached from the wall by using the wall mounting bracket.
- Made of weather-resistant ASA material.
  Suitable for devices intending to be used under direct sunlight.
- Optional universal PCB, PCB32-53 is compatible with SIM5-7-2 and 5-7-3 models. See PCB series on our website for more details.

Components

No.	Part name	Pcs	Material	Color / Finish
1	Cover	1	Weather-resistant ASA UL94HB	Off-white / Polished
2	Base	1	Weather-resistant ASA UL94HB	Off-white / Polished
3	Wall mounting bracket	1	Weather-resistant ASA UL94HB	Off-white / Polished

Bracket installation

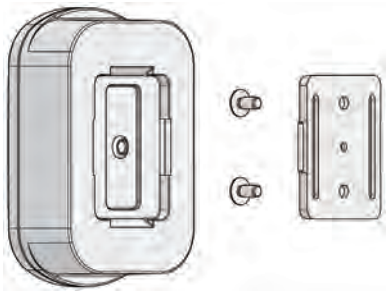

Accessories (Optional parts)

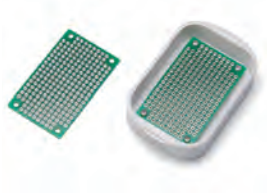

Universal PCB PCB series
See website

PCB mounting screw EM-2
See page 123

SIM dimensions

■ DXF/DWG/PDF/STP drawings available on our website.

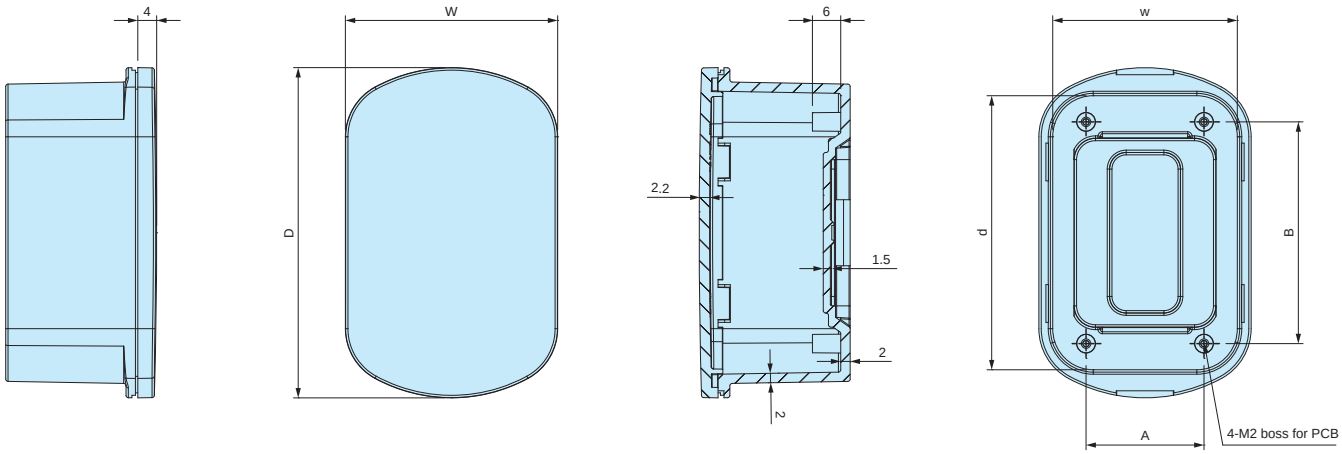

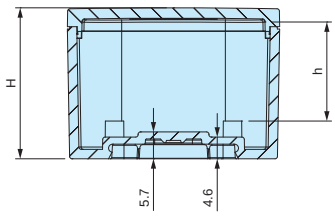

*No changes to external height (H) when affixed onto the wall mounting bracket.

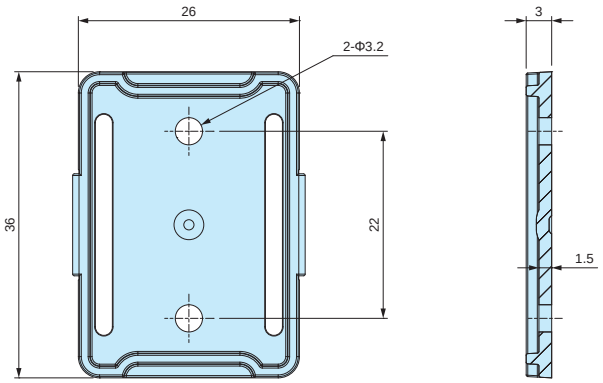

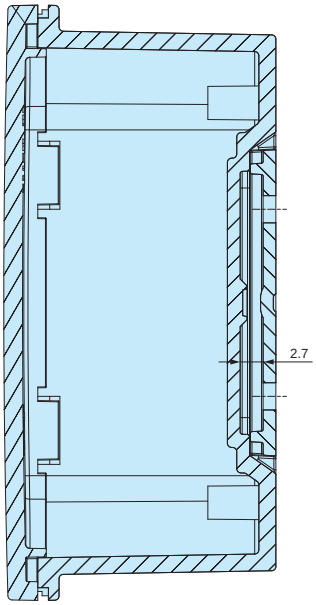

Hole layout for wall mount

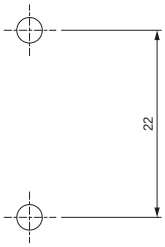

■ M3 screws for installation of bracket on walls are not included.

Product no. / Dimensions

Product no.	External dimensions			Internal dimensions			Boss pitch		Weight (g)
	W	D	H	w	d	h	A	B	
SIM5-7-2W	45	70	22	39.4	58.4	10.9	25	47	22.8
SIM5-7-3W	45	70	32	39.1	58	20.9	25	47	25.9
SIM5-9-2W	45	90	22	39.4	78.4	10.9	25	67	27,7
SIM5-9-3W	45	90	32	39.1	78	20.9	25	67	32.3

BUILT-IN BATTERY COMPARTMENT MODEL CHART

Series / Battery Compartment	WC series Page 51 ~ 54	CS series Page 87 ~ 88	CSS series Page 85 ~ 86
	IP67		
CR2032 x 1	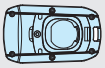 WC72-15(43×15.5×72) WC72-21(43×21.5×72) WC90-15(44.2×15.7×90)	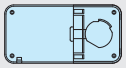 CS75 (35×12×75) CS90 (45×12×90)	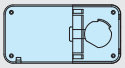 CSS75 (38.6×15.5×78.6) CSS90 (48.6×15.5×93.6)
CR2032 x 2		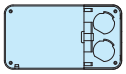 CS115 (63×12×115)	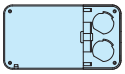 CSS115 (67.1×16×119.1)
CR2450 / CR2477 ×1		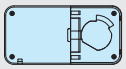 CS100 (50×16.8×100)	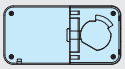 CSS100 (54.1×20.8×104.1)
AAA x 2	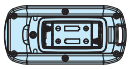 WC105-28-F2(50.5×28.2×105)		
AAA x 3			
AAA x 4			
AAA x 6			
AA x 2			
AA x 3			
AA x 4			
AA x 6			
9V x 1			

■ Enclosure shape, model number, and dimensions (W x H x D) are listed.

WH series Page 57 ~ 62	LC series Page 75 ~ 76	LCS series Page 71 ~ 74	LCT series Page 67 ~ 70
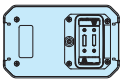 WH125-20-F2 (79×20×126) WH125-28-F2 (79×28×126)	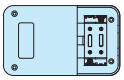 LC115-F2 (69×19.5×115) LC115H-F2(69×28×115)	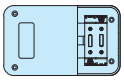 LCS115-F2 (74×24×120) LCS115H-F2 (74×32.5×120)	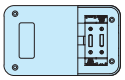 LCT115-F2 (76×28×121.9) LCT115H-F2 (76×36.5×121.9)
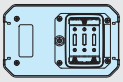 WH125-20-F3 (79×20×126) WH125-28-F3 (79×28×126)	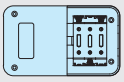 LC115-F3 (69×19.5×115) LC115H-F3 (69×28×115)	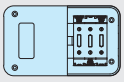 LCS115-F3 (74×24×120) LCS115H-F3 (74×32.5×120)	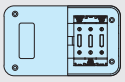 LCT115-F3 (76×28×121.9) LCT115H-F3 (76×36.5×121.9))
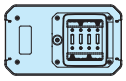 WH145-20-F4 (88×20×146)	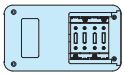 LC135-F4 (76×27×135) LC135H-F4 (76×35×135)	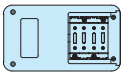 LCS135-F4 (81×32×141) LCS135H-F4 (81×40×141)	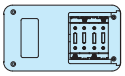 LCT135-F4 (85×40×143.9) LCT135H-F4 (85×48×143.9)
	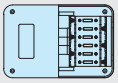 LC145S-F6 (96×20×145) LC145-F6 (96×27×145) LC145H-F6(96×35×145)	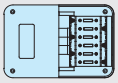 LCS145-F6 (101×32×151) LCS145H-F6(101×40×151)	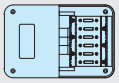 LCT145-F6 (105×40×153.9) LCT145H-F6(105×48×153.9)
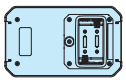 WH145-25-M2 (88×25×146) WH145-33-M2 (88×33×146)	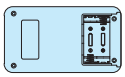 LC115H-M2 (69×28×115) LC135-M2 (76×27×135) LC135H-M2 (76×35×135) LC145-M2 (96×27×145) LC145H-M2 (96×35×145)	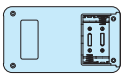 LCS115H-M2 (74×32.5×120) LCS135-M2 (81×32×141) LCS135H-M2 (81×40×141) LCS145-M2 (101×32×151) LCS145H-M2 (101×40×151)	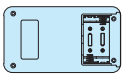 LCT115H-M2 (76×36.5×121.9) LCT135-M2 (85×40×143.9) LCT135H-M2 (85×48×143.9) LCT145-M2 (105×40×153.9) LCT145H-M2 (105×48×153.9)
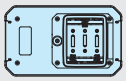 WH145-25-M3 (88×25×146) WH145-33-M3 (88×33×146)	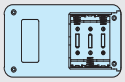 LC135-M3 (76×27×135) LC135H-M3 (76×35×135)	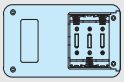 LCS135-M3 (81×32×141) LCS135H-M3 (81×40×141)	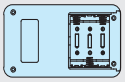 LCT135-M3(85×40×143.9) LCT135H-M3(85×48×143.9)
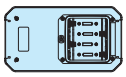 WH170-25-M4 (95×25×171) WH170-33-M4 (95×33×171)	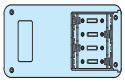 LC145-M4 (96×27×145) LC145H-M4 (96×35×145) LC165-M4 (80×27×165) LC165H-M4 (80×35×165)	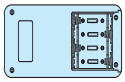 LCS145-M4(101×32×151) LCS145H-M4(101×40×151) LCS165-M4 (85×32×171) LCS165H-M4 (85×40×171)	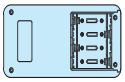 LCT145-M4(105×40×153.9) LCT145H-M4(105×48×153.9) LCT165-M4 (89×40×173.9) LCT165H-M4 (89×48×173.9)
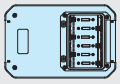 WH190-25-M6 (126×25×191) WH190-33-M6 (126×33×191)			
	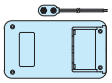 LC115H-9V (69×28×115) LC135-9V (76×27×135) LC135H-9V (76×35×135)	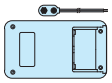 LCS115H-9V (74×32.5×120) LCS135-9V (81×32×141) LCS135H-9V (81×40×141)	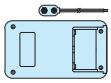 LCT115H-9V (76×36.5×121.9) LCT135-9V (85×40×143.9) LCT135H-9V (85×48×143.9)

*Dimensions shown for CSS, LCT and LCS series are with silicone cover attached.

IP67 PORTABLE CASE

WC series

IP67

IP67 is

●IEC60529 standard is a system for classifying the degrees of protection provided by the enclosures of electrical equipment, such as against dust and water.

IP6x : No ingress of dust; complete protection against contact (dust tight)
IPx7 : No ingress of water when submerged up to a depth of 1 m for 30 min

High waterproof performance with both TPE and silicone gasket

ABS and TPE double-shot molded top & bottom covers allows for a good waterproof seal.
The durable silicone gasket maintains the battery lid seal.
Insert nut and screw allow the battery compartment to remain durable even after repeated opening/closing.

Great protection by TPE sides

Side grips in TPE material provides a comfort -able grip and protection against drop impact.

Available in 3 different color combinations

APPLICATION EXAMPLE

Best for outdoor use as a remote control, RFID tag, compact GPS, wireless device, simplified measurement gadget and so on.

Multi-function Infrared Remote Controller

Product by SIMEX (Poland)

Emergency Call Receiver / Transmitter

Product by Knop Elektronik (Denmark)

Long Range Keyfob Remote Controller

Product by Elsema (Australia)

Structure AI Inspection Noise Detector System

Product by AIST (Japan)

Custom embossed or standard overlay sheets with low initial costs are available

Waterproof performance may be lost by drilling/milling holes or cut-outs for buttons or switches on waterproof enclosures.
Use an IP rated overlay sheet, or membrane keypad in order to allow the milled area to remain waterproof.

Advantage 1 Reduce initial cost with digital inkjet printing.

Advantage 2 Reduce initial tooling cost for cutting die with digital cutting plotter.

Advantage 3 Reduce initial tooling cost for embossing with in-house mold processing.

Advantage 4 Shorter lead-time made possible by having all production be in-house.

*applicable to small quantity orders

WC series IP67 PORTABLE PLASTIC CASE

NEW SIZE

IP67

- Double shot injection molded TPE Grip and ABS Body.
- New AAA x 2 battery compartment model added. Case with a CR2032 coin battery, and no battery compartment types are also available. Solder battery contacts on PCB for CR2032 models.
- TPE side grip provides not only a comfortable grip, but also protects from drop impact.
- Suitable to be used as a remote controller, key fob, wireless device, RFID tag, and so on.
- See page 54 for coin battery contact installation steps.

Technical Data

Protection class : IP67
Operating temperature : -10°C ~ +50°C
Recommended torque :
WC72 • WC90 : 0.06 ~ 0.08N • m
WC105 : 0.13 ~ 0.15N • m

WC72-□, WC90-□

WC105-28

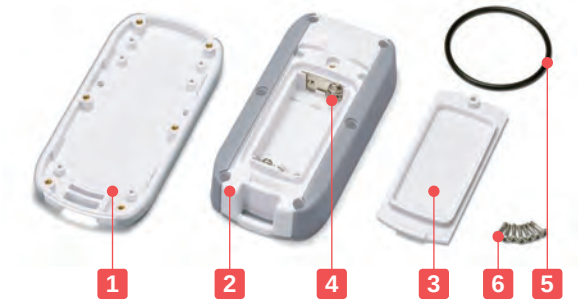

Components

No.	Part name	Pcs	Material	Color / Finish
1	Top cover	1	ABS UL94HB : Elastomer	Black & Black • Black & Marine • White & Light gray
2	Bottom cover	1	ABS UL94HB : Elastomer	Black & Black • Black & Marine • White & Light gray
3	Battery lid*	1	ABS UL94HB	Black • White
4	Battery contact*	1 set	WC72 • WC90 : Stainless steel SUS304 WC105 : Brass • Hard steel wire	Nickel plated
5	O-ring*	1	Silicone	Black
6	Screw	7	Stainless steel SUS304	Unfinished

*Not applicable to the N (no battery compartment type) models.

Accessories (Optional parts)

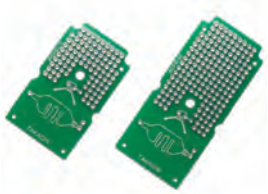

Exclusive PCB WCPB series
See page 56

Strap STPS series
See page 95

PCB mounting screw EM-1.6
See page 123

Neodymium magnet NMG series
See page 117

Coin Battery Contact Installation Steps

Solder the contacts onto the PCB

Install the PCB in the top cover

All set!

CAUTION ■ Use caution when mounting battery contacts.

■ Battery direction is incused on the inner side of the battery lid.

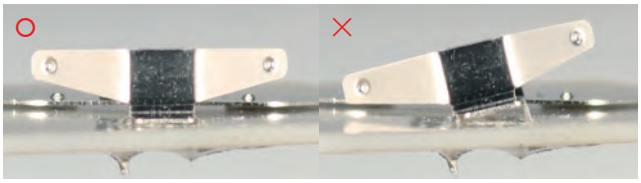

WC72-□, WC90-□

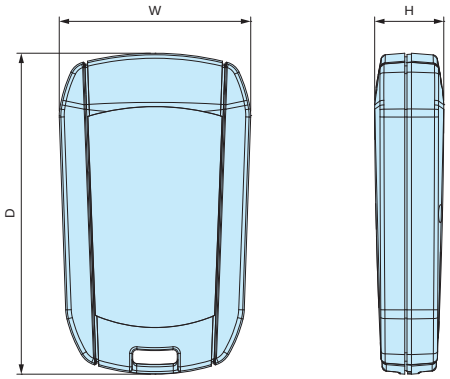

WC105-28

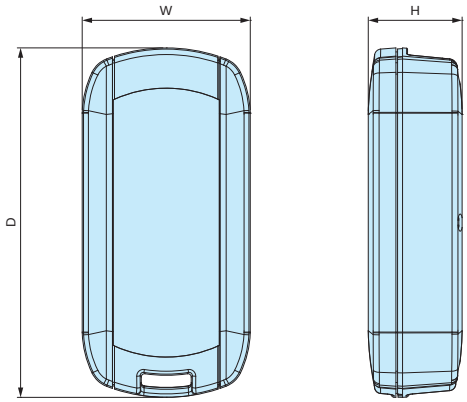

Battery Compartment Types

Type	N	C	F2
	None	CR2032 x 1	AAA x 2
Battery Compartment	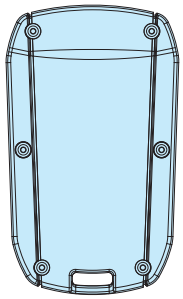	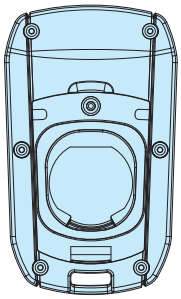	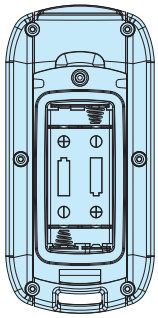

Color Type

Code	B B	B M	W L
Body	Black	Black	White
Grip	Black	Marine	Light gray
Color			

Product no. / Dimensions

■ Please suffix color code at the end of the product number.

Product no.	W	H	D	Battery Compartment	Weight (g)
WC 72-15-N -□□	43	15.5	72	None	18.5
WC 72-15-C -□□	43	15.5	72	CR2032	22
WC 72-21-N -□□	43	21.5	72	None	22
WC 72-21-C -□□	43	21.5	72	CR2032	25.5
WC 90-15-N -□□	44.2	15.7	90	None	23
WC 90-15-C -□□	44.2	15.7	90	CR2032	26.5
WC 90-21-N -□□	44.2	21.7	90	None	27
NEW WC105-28-N -□□	50.5	28.2	105	None	47
NEW WC105-28-F2-□□	50.5	28.2	105	AAA x 2	58.5

WC dimensions

■ DXF/DWG/PDF/STP drawings available on our website.

WC72-15-N / WC72-21-N
WC90-15-N / WC90-21-N
WC105-28-N

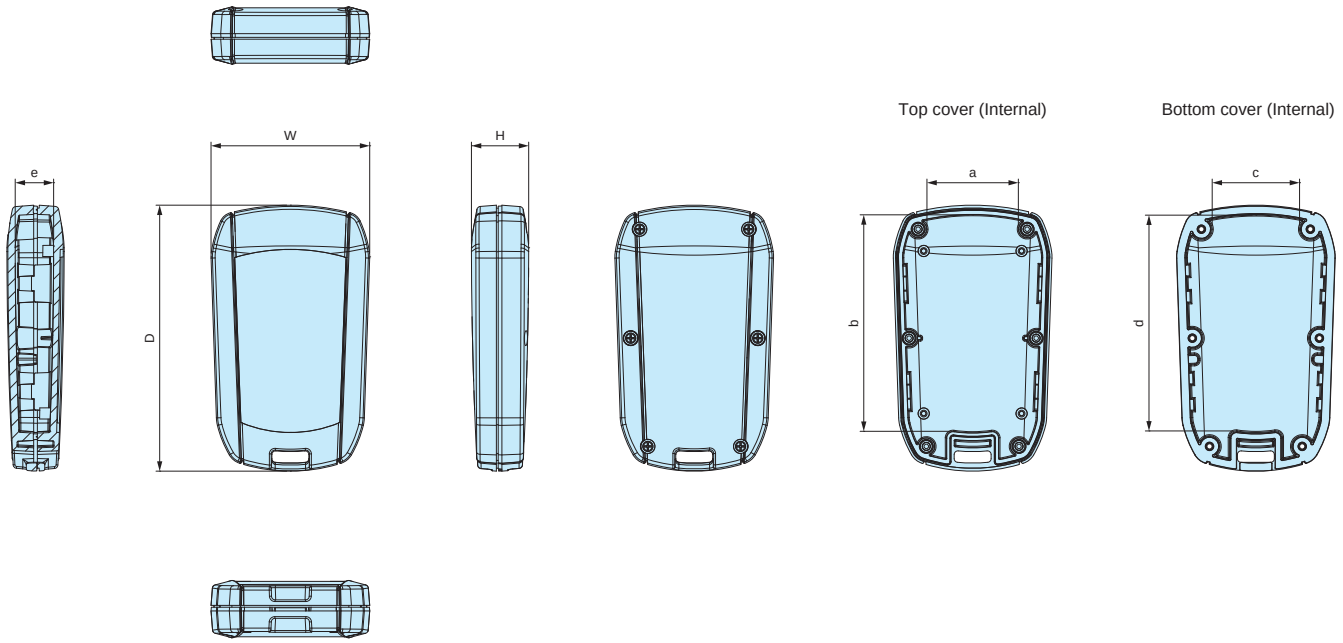

Product no.	W	H	D	a	b	c	d	e
WC 72-15-N-□□	43	15.5	72	24.7	58.6	23.6	58.4	10.4
WC 72-21-N-□□	43	21.5	72	24.7	58.6	23	56.3	16.3
WC 90-15-N-□□	44.2	15.7	90	26.1	76.6	25	76.4	10.4
WC 90-21-N-□□	44.2	21.7	90	26.1	76.6	24.4	74.3	16.4
WC105-28-N-□□	50.5	28.2	105	26.4	87.9	24.2	84.1	22.4

WC72-15-C / WC72-21-C
WC90-15-C
WC105-28-F2

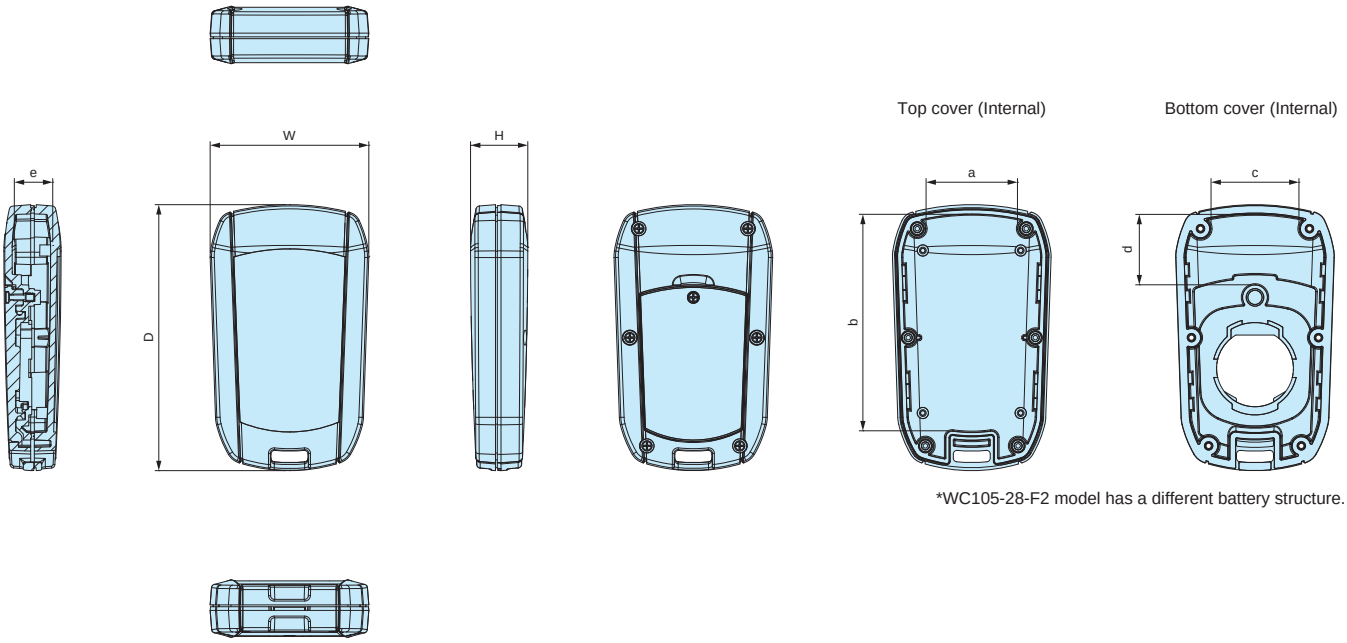

*WC105-28-F2 model has a different battery structure.

Product no.	W	H	D	a	b	c	d	e
WC 72-15-C-□□	43	15.5	72	24.7	58.6	23.8	19	10.4
WC 72-21-C-□□	43	21.5	72	24.7	58.6	23	17.3	16.3
WC 90-15-C-□□	44.2	15.7	90	26.1	76.6	25	36.9	10.4
WC105-28-F2-□□	50.5	28.2	105	26.4	87.9	24.2	14	22.4

WCPB series EXCLUSIVE PCB for WC

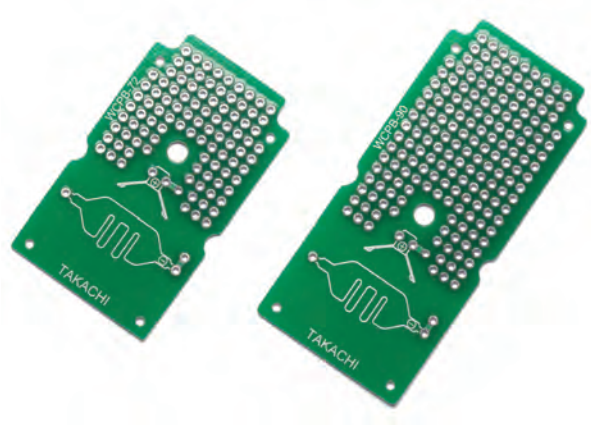

- Exclusive PCB for C-type of CR2032 models.
- Glass epoxy board (FR-4), through-holes on both sides, 2.54mm hold pitch.
- Designed with a battery contact hole. Battery contact position and direction are printed onto the PCB.

Please use battery contacts included with WC C-type of CR2032 models

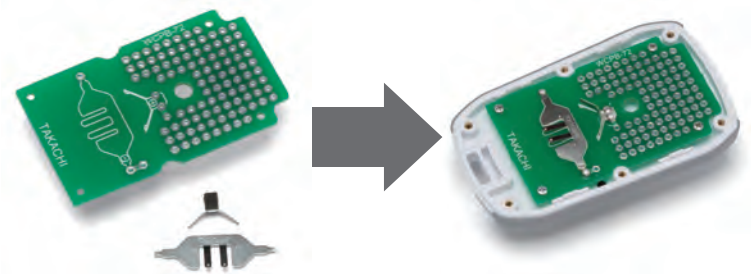

WCPB dimensions

- DXF/DWG/PDF/STP drawings available on our website.

WCPB-72

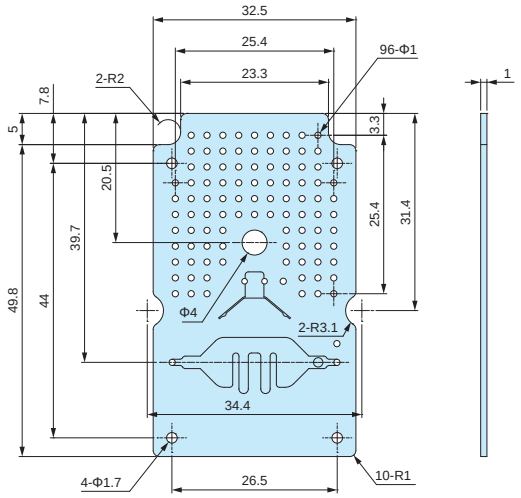

WCPB-90

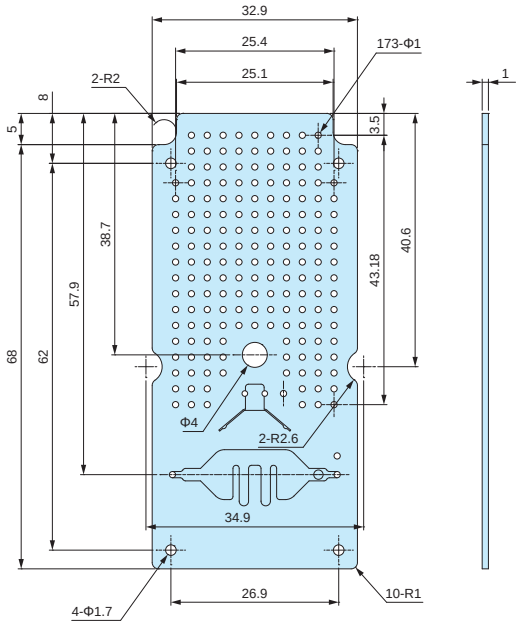

Note : Holes (4-Φ1.7) for PCB mounting bosses are un-soldered.

Components

Part name	Pcs	Material	Color / Finish
PCB	1	Glass epoxy (FR-4) t=1.0	Through-hole • Lead-free Solder • resist
Screw	4	Steel (Tapping M1.6-4)	Trivalent chromate

Product no. / Dimensions

Product no.	Suitable case
WCPB-72	WC72-15-C
	WC72-21-C
WCPB-90	WC90-15-C

Battery contact position details

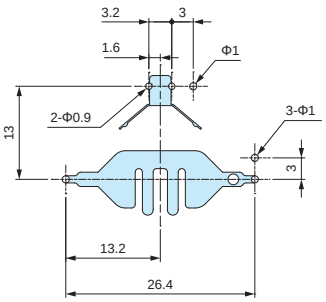

WH series

IP67 WATERPROOF HAND-HELD ENCLOSURE

IP67 is

●IEC60529 standard is a system for classifying the degrees of protection provided by the enclosures of electrical equipment, such as against dust and water.

IP6x : No ingress of dust; complete protection against contact (dust tight).
IPx7 : No ingress of water when submerged up to a depth of 1 m for 30 min

High waterproof performance with a silicone gasket

High elasticity and good durability for maintaining waterproofing capability.
Built-in insert nut use for great long lasting water protection even after frequent opening and closing. Battery compartment is also waterproofed.
Various battery compartment types are available, ranging from AAA x2, to AA x6.

Side grip provides great protection

Elastic TPE grips provides for a more secured hold. Side grips are designed to be on the sides and corners of the enclosure to minimize drop impact.

Available in 10 different color combinations

Information on waterproofing overlay sheets

APPLICATION EXAMPLE

Note that waterproofing will be invalidated if a hole is made for button or switch on waterproof enclosures.
Please utilize a waterproof (IP67 rated equivalent) membrane keypad or switch, or overlay sheet for maintaining IP67.
See page Custom-1 ~ Custom-2 for further details of digital printed overlay.

APPLICATION EXAMPLE

Suitable for industrial measuring instruments, transceivers, controllers, medical equipment and so on.

Portable Signal Generator

Product by Candox Systems (Japan)

Wireless CO_2 Microclimate Sensor

Product by GrowFlux (USA)

Wireless Food Probe Sensor

Product by Monnit (USA)

Wireless Temperature Detector

Product by BRESIMAR AUTOMAÇÃO (Portugal)

Sigfox Network Measurement Device

Product by Simple Hardware (Czech Republic)

IoT Temperature Monitoring Sensor for HACCP

Product by RATOC Systems (Japan)

*See page 91 for further details of Sigfox.

Competition Time Measurement System

Photo by TRAC (Japan)
Product by NIKKEN SOGYO (Japan)

Portable Airflow Meter

Product by KENEK (Japan)

Honey Bee Tracker

Product by APiS Technology (Portugal)

Digital X-ray System

Product by SmartRayVision (USA)

WH series IP67 HAND-HELD ENCLOSURE

Technical Data
Protection class : IP67 Operating temperature : -10°C ~ +60°C Recommended torque: 0.2N • m ~ 0.3N • m (2kgf • cm ~ 3kgf • cm)

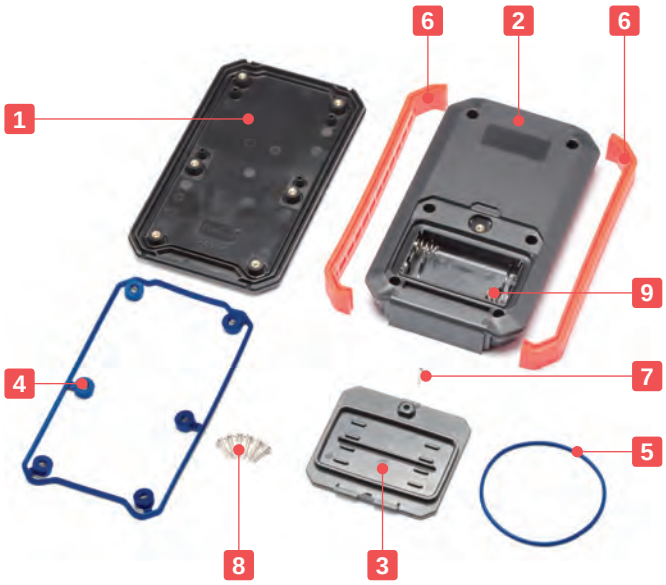

- Stylish and elegantly designed with chamfered edge construction.
- IP67 protection class enclosure.
- Manufactured from flame-resistant ABS UL94V-0 material.
- 8 different internal compartment types are available: AAA x 2, AAA x 3, AAA x 4, AA x 2, AA x 3, AA x 4, AA x 6 and no battery type. Battery compartments have positive (+) / negative (-) pole mark to prevent incorrect insertion.
- The TPE side grips are available in 5 unique colors, and functions as an anti-slip grip pad and drop impact protection.

Components

No.	Part name	Pcs	Material	Color / Finish
1	Top cover	1	ABS UL94V-0	Off-white • Black
2	Bottom cover	1	ABS UL94V-0	Off-white • Black
3	Battery cover *	1	ABS UL94V-0	Off-white • Black
4	Gasket	1	Silicone	N • F2 • F3 • M4 type : Black M2 • M6 type : Blue M3 • F4 • type : Light gray
5	O-ring *	1	Silicone	
6	Side grip	2	TPE	Black • Light gray • Navy • Red • Yellow
7	Battery cover screw *	1	Stainless steel M2.5-8	Unfinished
8	Screw	6	Stainless steel M2.5-10	Unfinished
9	Battery contact *	1 set	Brass	Nickel plated

* Not applicable to the N (no battery compartment type) models.

Accessories (Optional parts)

PCB mounting screw EM-2.3
See page 123

Tapping standoff TPS series
See page 122

Cable gland
See page 333 ~ 340

Neodymium magnet NMG series
See page 117

Battery Compartment Types

Type	N None	F2 AAA x 2	F3 AAA x 3	F4 AAA x 4	M2 AA x 2	M3 AA x 3	M4 AA x 4	M6 AA x 6
Battery Compartment	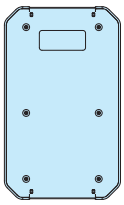	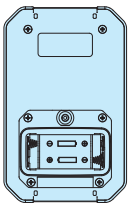	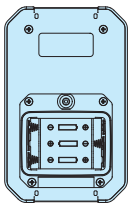	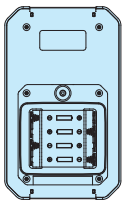	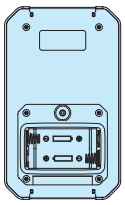	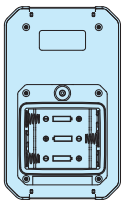	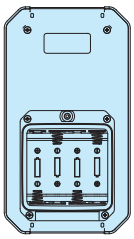	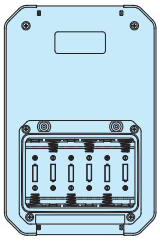

Color Type

Code	B B Black / Black	B L Black / Light gray	B N Black / Navy	B R Black / Red	B Y Black / Yellow
Color					
Code	**W B Off-white / Black**	**W L Off-white / Light gray**	**W N Off-white / Navy**	**W R Off-white / Red**	**W Y Off-white / Yellow**
Color					

WH dimensions

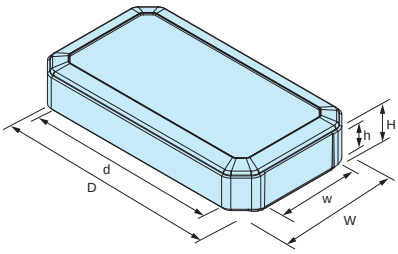

■ DXF/DWG/PDF/STP drawings available on our website.

Product no. / Dimensions

Product no.	External dimensions			Internal dimensions			Battery compartment	Weight (g)
	W	H	D	w	h	d		
WH125-20-N -□□	79	20	126	39	9	107.7	None	101.0
WH125-20-F2 -□□	79	20	126	60	9	46.4	AAA x 2	102.0
WH125-20-F3 -□□	79	20	126	60	9	35.9	AAA x 3	109.0
WH125-28-N -□□	79	28	126	39	17	106.3	None	119.0
WH125-28-F2 -□□	79	28	126	60	17	46.4	AAA x 2	121.0
WH125-28-F3 -□□	79	28	126	60	17	35.9	AAA x 3	127.0
WH145-20-N -□□	88	20	146	45	8	129.6	None	125.5
WH145-20-F4 -□□	88	20	146	69.4	8	36.5	AAA x 4	129.5
WH145-25-N -□□	88	25	146	45	13	129.6	None	137.5
WH145-25-M2 -□□	88	25	146	69.2	13	51.5	AA x 2	161.5
WH145-25-M3 -□□	88	25	146	69.2	13	36.5	AA x 3	159.5
WH145-33-N -□□	88	33	146	45	21	129.6	None	162.0
WH145-33-M2 -□□	88	33	146	69.2	21	51.5	AA x 2	180.5
WH145-33-M3 -□□	88	33	146	69.2	21	36.5	AA x 3	181.5
WH170-25-N -□□	95	25	171	51	13	154.4	None	169.0
WH170-25-M4 -□□	95	25	171	73.2	13	54.8	AA x 4	195.0
WH170-33-N -□□	95	33	171	50.9	21	150.7	None	191.0
WH170-33-M4 -□□	95	33	171	73.2	21	54.8	AA x 4	220.0
WH190-25-N -□□	126	25	191	81	13	170.3	None	226.0
WH190-25-M6 -□□	126	25	191	107.6	13	72.6	AA x 6	276.0
WH190-33-N -□□	126	33	191	81	21	170.3	None	252.0
WH190-33-M6 -□□	126	33	191	107	21	72.3	AA x 6	307.0

LCT•LCS•LC•LCE HAND-HELD PLASTIC CASE

Hand-held case suitable for industrial measuring equipment, wireless communication devices and medical equipment.
9 different sizes with 8 different battery compartment types line-up available.
Consisting of a line-up of 4 different series: LC - plastic case, LCT - case with shockproof silicone cover, LCS - case with silicone cover, and LCE - EMC shielded plastic case.

LCT Plastic Case with Shockproof Silicone Cover - 4 Rugged Shockproof Silicone Cover Colors

Orange

Green

Navy Blue

Dark Gray

LCS Plastic Case with Silicone Cover - 5 Silicone Cover Colors

Red

Green

Blue

Dark Gray

Light Gray

CUSTOMIZATION

Machining

Custom cut on silicone cover

Custom color, custom shaped silicone cover

Digital printed overlay

APPLICATION EXAMPLE

Metal Coating Thickness Gauge

Product by NOVOTEST (Ukraine)

Solar Panel Trouble Checker

Product by ITES (Japan)

Solar Cell Connection Checker

Product by Shinei Electronic Measuring (Japan)

Digital Pressure Gauge Setter

Product by NAGANO KEIKI (Japan)

Fluorescent Portable Dissolved Oxygen Meter

Product by Automatic system Research (Japan)

Distribution Transformer Tester

Product by ndb Technologies (Canada)

Network Partial Discharge Checker

Product by ndb Technologies (Canada)

Radiation Survey Meter

Product by HISAKI Sekkei (Japan)

Mini Radiation Survey Meter

Product by Techno AP (Japan)

Wireless Voltage Probe

Product by Enertronics (Switzerland)

Portable Anemometer

Product by FieldPro (Japan)

Ultrasonic Thickness Gauge

Product by DEMEQ (Argentina)

Hyperhidrosis Treatment Device

Product by Merebit (Czech Republic)

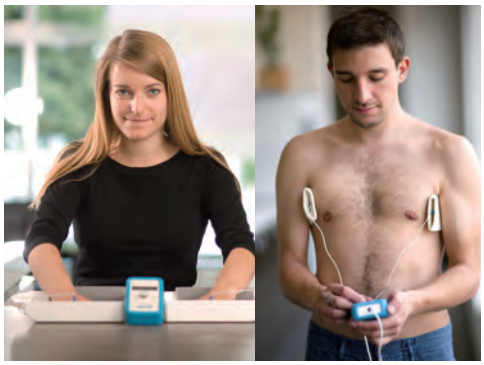

RF Scope

Product by Arrow7 Corporation (Japan)

Satellite Broadcasting Signal Generator

Product by MASPRO (Japan)

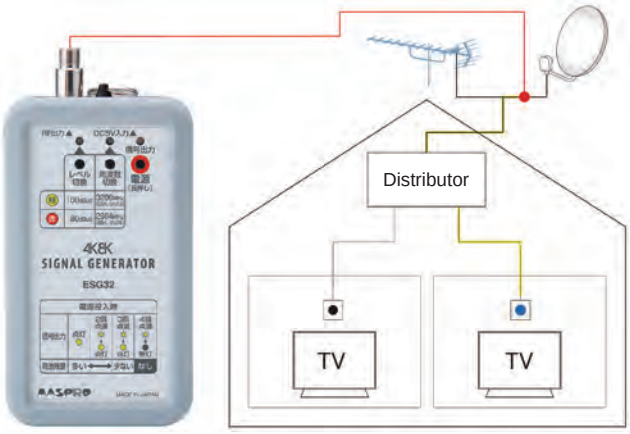

Onboard Programmer

Product by Hokuto Electronic (Japan)

Code Debugger

Product by BITRAN (Japan)

LCT series HAND-HELD CASE with SHOCKPROOF SILICONE COVER

Technical Data
Protection class: IP40 Operating temperature: -10°C ~ +60°C

- Plastic case with shockproof silicone cover. Protects the device from various impact.
- Manufactured with flame-resistant ABS UL94V-0 material. Selectable from a range of battery compartment types.
- Positive (+) / Negative (-) pole marks are incused on the inside of the battery compartments.
- Suitable for measuring instruments, test devices, wireless communication devices, medical devices and so on.

Battery compartment type

No battery compartment type

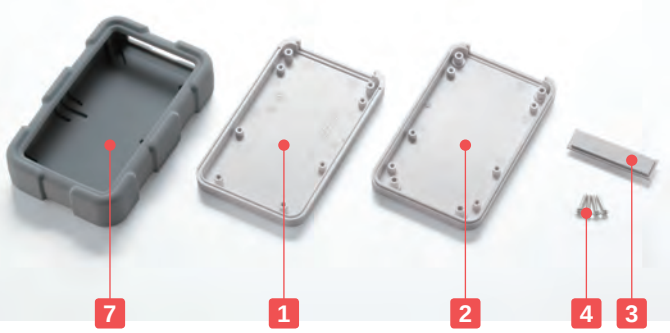

Components

No.	Part name	Pcs	Material	Color / Finish
1	Top cover	1	ABS UL94V-0	Off-white • Dark gray
2	Bottom cover	1	ABS UL94V-0	Off-white • Dark gray
3	Panel	1	ABS UL94V-0	Off-white • Dark gray
4	Self-tapping screw	4	Steel M2.6	Nickel plated • Black trivalent chromate
5	Battery cover	1	ABS UL94V-0	Off-white • Dark gray
6	Battery contact • Battery snap	1 set	Brass • Brass : PVC	Nickel plated • Nickel plated : Black
7	Silicone cover	1	Silicone	Orange • Green • Navy • Dark gray

Accessories (Optional parts)

Tapping standoff TPS series
See page 122

PCB mounting screw EM-2.3
See page 123

TORX screw MR series
See page 123

Key ring CR-20
See page 96

Strap STP series
See page 96

Battery Compartment Type

Type	N None	F2 AAA x 2	F3 AAA x 3	F4 AAA x 4	F6 AAA x 6	M2 AA x 2	M3 AA x 3	M4 AA x 4	9V 9V x 1
Battery compartment	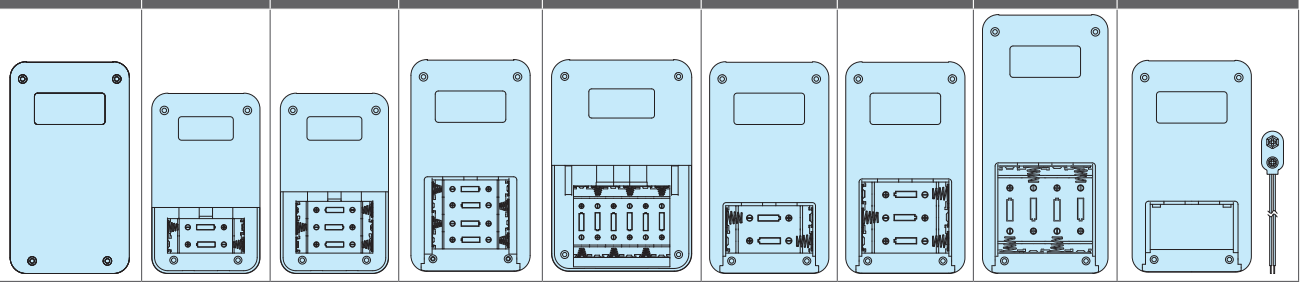								

Color Type

Code	DO Dark gray / Orange	DG Dark gray / Green	DN Dark gray / Navy	DD Dark gray / Dark gray
Color				
Code	WO Off-white / Orange	WG Off-white / Green	WN Off-white / Navy	WD Off-white / Dark gray
Color				

Product no. / Dimensions

■ Please suffix color code at the end of the product number.

Product no.	W	H	D	Battery compartment	Weight (g)
LCT115 -N -□□	76(69)	28(19.5)	121.9(115)	None	123.5
LCT115 -F2 -□□	76(69)	28(19.5)	121.9(115)	AAA x 2	128
LCT115 -F3 -□□	76(69)	28(19.5)	121.9(115)	AAA x 3	130
LCT115H-N -□□	76(69)	36.5(28)	121.9(115)	None	141
LCT115H-F2 -□□	76(69)	36.5(28)	121.9(115)	AAA x 2	145.5
LCT115H-F3 -□□	76(69)	36.5(28)	121.9(115)	AAA x 3	147
LCT115H-M2-□□	76(69)	36.5(28)	121.9(115)	AA x 2	149.5
LCT115H-9V -□□	76(69)	36.5(28)	121.9(115)	9V x 1	149
LCT135 -N -□□	85(76)	40(27)	143.9(135)	None	210.5
LCT135 -F4 -□□	85(76)	40(27)	143.9(135)	AAA x 4	225.5
LCT135 -M2-□□	85(76)	40(27)	143.9(135)	AA x 2	223.5
LCT135 -M3-□□	85(76)	40(27)	143.9(135)	AA x 3	229
LCT135 -9V -□□	85(76)	40(27)	143.9(135)	9V x 1	227
LCT135H-N -□□	85(76)	48(35)	143.9(135)	None	231.5
LCT135H-F4 -□□	85(76)	48(35)	143.9(135)	AAA x 4	246
LCT135H-M2-□□	85(76)	48(35)	143.9(135)	AA x 2	245
LCT135H-M3-□□	85(76)	48(35)	143.9(135)	AA x 3	250
LCT135H-9V -□□	85(76)	48(35)	143.9(135)	9V x 1	247.5
LCT145 -N -□□	105(96)	40(27)	153.9(145)	None	258.5
LCT145 -F6 -□□	105(96)	40(27)	153.9(145)	AAA x 6	278.5
LCT145 -M2-□□	105(96)	40(27)	153.9(145)	AA x 2	272.5
LCT145 -M4-□□	105(96)	40(27)	153.9(145)	AA x 4	279.5
LCT145H-N -□□	105(96)	48(35)	153.9(145)	None	282
LCT145H-F6 -□□	105(96)	48(35)	153.9(145)	AAA x 6	302.5
LCT145H-M2-□□	105(96)	48(35)	153.9(145)	AA x 2	296
LCT145H-M4-□□	105(96)	48(35)	153.9(145)	AA x 4	303
LCT165 -N -□□	89(80)	40(27)	173.9(165)	None	263.5
LCT165 -M4-□□	89(80)	40(27)	173.9(165)	AA x 4	283
LCT165H-N -□□	89(80)	48(35)	173.9(165)	None	286
LCT165H-M4-□□	89(80)	48(35)	173.9(165)	AA x 4	305

■ ( ) value = enclosure dimension.

Silicone cover dimensions

■ DXF/DWG/PDF drawings available on our website.

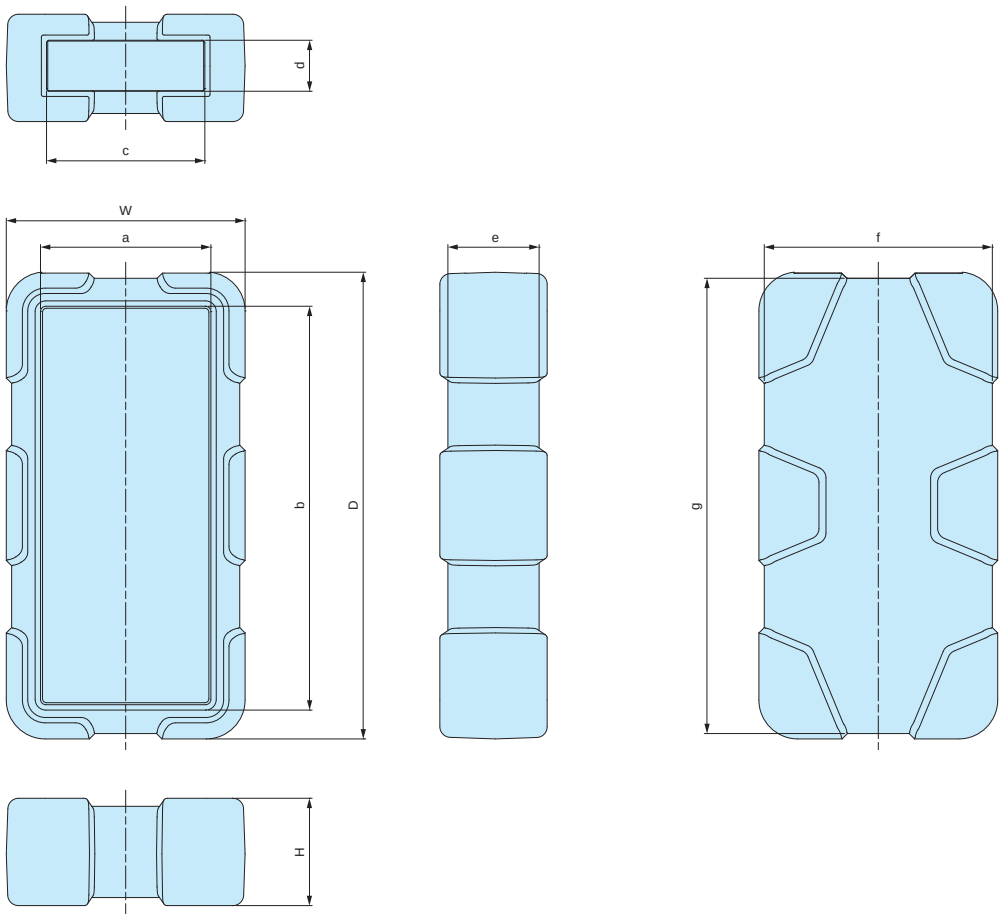

Product no.	W	H	D	a	b	c	d	e	f	g
LCT115 -N -□□	76	28	121.9	55.5	101.5	48.3	12	24	72	117.8
LCT115 -F2 -□□	76	28	121.9	55.5	101.5	48.3	12	24	72	117.8
LCT115 -F3 -□□	76	28	121.9	55.5	101.5	48.3	12	24	72	117.8
LCT115H-N -□□	76	36.5	121.9	55.5	101.5	48.3	20.5	32.5	72	117.8
LCT115H-F2 -□□	76	36.5	121.9	55.5	101.5	48.3	20.5	32.5	72	117.8
LCT115H-F3 -□□	76	36.5	121.9	55.5	101.5	48.3	20.5	32.5	72	117.8
LCT115H-M2-□□	76	36.5	121.9	55.5	101.5	48.3	20.5	32.5	72	117.8
LCT115H-9V -□□	76	36.5	121.9	55.5	101.5	48.3	20.5	32.5	72	117.8
LCT135 -N -□□	85	40	143.9	59.5	118.5	55	19	34	81	139.7
LCT135 -F4 -□□	85	40	143.9	59.5	118.5	55	19	34	81	139.7
LCT135 -M2-□□	85	40	143.9	59.5	118.5	55	19	34	81	139.7
LCT135 -M3-□□	85	40	143.9	59.5	118.5	55	19	34	81	139.7
LCT135 -9V -□□	85	40	143.9	59.5	118.5	55	19	34	81	139.7
LCT135H-N -□□	85	48	143.9	59.5	118.5	55	27	42	81	139.6
LCT135H-F4 -□□	85	48	143.9	59.5	118.5	55	27	42	81	139.6
LCT135H-M2-□□	85	48	143.9	59.5	118.5	55	27	42	81	139.6
LCT135H-M3-□□	85	48	143.9	59.5	118.5	55	27	42	81	139.6
LCT135H-9V -□□	85	48	143.9	59.5	118.5	55	27	42	81	139.6
LCT145 -N -□□	105	40	153.9	76.5	125.5	71	19	34	101	149.7
LCT145 -F6 -□□	105	40	153.9	76.5	125.5	71	19	34	101	149.7
LCT145 -M2-□□	105	40	153.9	76.5	125.5	71	19	34	101	149.7
LCT145 -M4-□□	105	40	153.9	76.5	125.5	71	19	34	101	149.7
LCT145H-N -□□	105	48	153.9	76.5	125.5	71	27	42	101	149.7
LCT145H-F6 -□□	105	48	153.9	76.5	125.5	71	27	42	101	149.7
LCT145H-M2-□□	105	48	153.9	76.5	125.5	71	27	42	101	149.7
LCT145H-M4-□□	105	48	153.9	76.5	125.5	71	27	42	101	149.7
LCT165 -N -□□	89	40	173.9	63.5	148.5	59	19	34	85	169.7
LCT165 -M4-□□	89	40	173.9	63.5	148.5	59	19	34	85	169.7
LCT165H-N -□□	89	48	173.9	63.5	148.5	59	27	42	85	169.6
LCT165H-M4-□□	89	48	173.9	63.5	148.5	59	27	42	85	169.6

Enclosure dimensions

■ DXF/DWG/PDF/STP drawings available on our website.

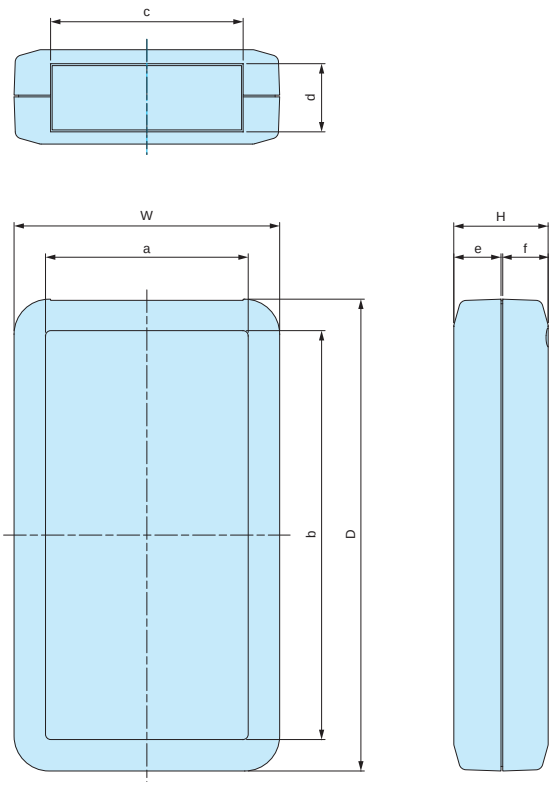

■ Please suffix color code at the end of the product number.

Product no.	W	H	D	a	b	c	d	e	f	Battery compartment
LCT115 -N -□□	69	19.5	115	54	100	48.1	12	10	9	None
LCT115 -F2 -□□	69	19.5	115	54	100	48.1	12	10	9	AAA x 2
LCT115 -F3 -□□	69	19.5	115	54	100	48.1	12	10	9	AAA x 3
LCT115H -N -□□	69	28	115	54	100	48.1	20.5	18.5	9	None
LCT115H -F2 -□□	69	28	115	54	100	48.1	20.5	18.5	9	AAA x 2
LCT115H -F3 -□□	69	28	115	54	100	48.1	20.5	18.5	9	AAA x 3
LCT115H -M2 -□□	69	28	115	54	100	48.1	20.5	18.5	9	AA x 2
LCT115H -9V -□□	69	28	115	54	100	48.1	20.5	18.5	9	9V x 1
LCT135 -N -□□	76	27	135	58	117	55.1	19.5	13.5	13	None
LCT135 -F4 -□□	76	27	135	58	117	55.1	19.5	13.5	13	AAA x 4
LCT135 -M2 -□□	76	27	135	58	117	55.1	19.5	13.5	13	AA x 2
LCT135 -M3 -□□	76	27	135	58	117	55.1	19.5	13.5	13	AA x 3
LCT135 -9V -□□	76	27	135	58	117	55.1	19.5	13.5	13	9V x 1
LCT135H -N -□□	76	35	135	58	117	55.1	27.5	21.5	13	None
LCT135H -F4 -□□	76	35	135	58	117	55.1	27.5	21.5	13	AAA x 4
LCT135H -M2 -□□	76	35	135	58	117	55.1	27.5	21.5	13	AA x 2
LCT135H -M3 -□□	76	35	135	58	117	55.1	27.5	21.5	13	AA x 3
LCT135H -9V -□□	76	35	135	58	117	55.1	27.5	21.5	13	9V x 1
LCT145 -N -□□	96	27	145	75	124	71.1	19.5	14.5	12	None
LCT145 -F6 -□□	96	27	145	75	124	71.1	19.5	14.5	12	AAA x 6
LCT145 -M2 -□□	96	27	145	75	124	71.1	19.5	14.5	12	AA x 2
LCT145 -M4 -□□	96	27	145	75	124	71.1	19.5	14.5	12	AA x 4
LCT145H -N -□□	96	35	145	75	124	71.1	27.5	22.5	12	None
LCT145H -F6 -□□	96	35	145	75	124	71.1	27.5	22.5	12	AAA x 6
LCT145H -M2 -□□	96	35	145	75	124	71.1	27.5	22.5	12	AA x 2
LCT145H -M4 -□□	96	35	145	75	124	71.1	27.5	22.5	12	AA x 4
LCT165 -N -□□	80	27	165	62	147	59.1	19.5	13.5	13	None
LCT165 -M4 -□□	80	27	165	62	147	59.1	19.5	13.5	13	AA x 4
LCT165H -N -□□	80	35	165	62	147	59.1	27.5	21.5	13	None
LCT165H -M4 -□□	80	35	165	62	147	59.1	27.5	21.5	13	AA x 4

LCS series HAND-HELD CASE with SILICONE COVER

Technical Data
Protection class: IP40 Operating temperature: -10°C ~ +60°C

- Plastic case with silicone cover providing not only comfortable and anti-slip grip, but also protection from drop impact.
- Manufactured with flame-resistant ABS UL94V-0. Several battery compartment types are available.
- Positive (+) / negative (-) pole mark are incused on the inside of the battery compartments.
- Suitable for measuring instruments, test devices, wireless communication devices, medical devices and so on.

Components

No.	Part name	Pcs	Material	Color / Finish
1	Top cover	1	ABS UL94V-0	Off-white • Dark gray
2	Bottom cover	1	ABS UL94V-0	Off-white • Dark gray
3	Panel	1	ABS UL94V-0	Off-white • Dark gray
4	Self-tapping screw	4	Steel M2.6	Nickel plated • Black trivalent chromate
5	Battery cover	1	ABS UL94V-0	Off-white • Dark gray
6	Battery contact • Battery snap	1 set	Brass • Brass : PVC	Nickel plated • Nickel plated : Black
7	Silicone cover	1	Silicone	Red • Green • Blue • Light gray • Dark gray

Accessories (Optional parts)

Tapping standoff TPS series
See page 122

PCB mounting screw EM-2.3
See page 123

TORX screw MR series
See page 123

Key ring CR-20
See page 96

Strap STP series
See page 96

Battery Compartment Type

Type	N None	F2 AAA x 2	F3 AAA x 3	F4 AAA x 4	F6 AAA x 6	M2 AA x 2	M3 AA x 3	M4 AA x 4	9V 9V x 1
Battery compartment	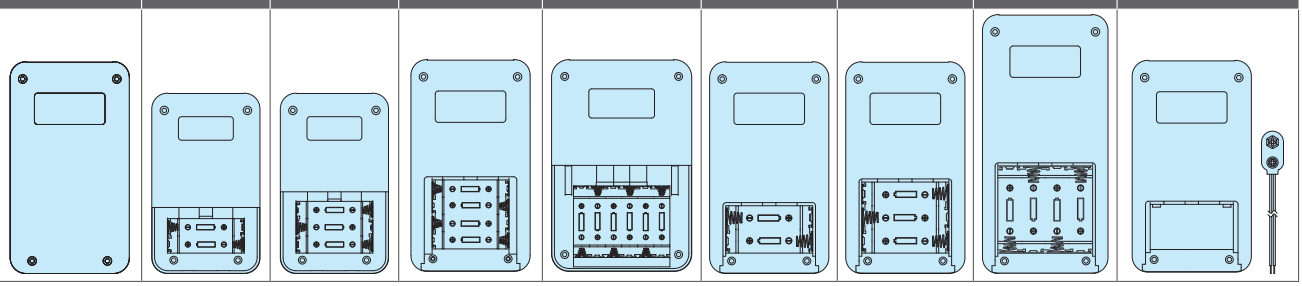								

Color Type

Code	DR Dark gray / Red	DG Dark gray / Green	DB Dark gray / Blue	DD Dark gray / Dark gray	DL Dark gray / Light gray
Color					
Code	**WR Off-white / Red**	**WG Off-white / Green**	**WB Off-white / Blue**	**WD Off-white / Dark gray**	**WL Off-white / Light gray**
Color					

Product no. / Dimensions

■ Please suffix color code at the end of the product number.

Product no.	W	H	D	Battery compartment	Weight (g)
LCS115 -N -□□	74(69)	24(19.5)	120(115)	None	113
LCS115 -F2 -□□	74(69)	24(19.5)	120(115)	AAA x 2	117.5
LCS115 -F3 -□□	74(69)	24(19.5)	120(115)	AAA x 3	119.5
LCS115H-N -□□	74(69)	32.5(28)	120(115)	None	130
LCS115H-F2 -□□	74(69)	32.5(28)	120(115)	AAA x 2	134.5
LCS115H-F3 -□□	74(69)	32.5(28)	120(115)	AAA x 3	136
LCS115H-M2-□□	74(69)	32.5(28)	120(115)	AA x 2	138.5
LCS115H-9V -□□	74(69)	32.5(28)	120(115)	9V x 1	138
LCS135 -N -□□	81(76)	32(27)	141(135)	None	165
LCS135 -F4 -□□	81(76)	32(27)	141(135)	AAA x 4	180
LCS135 -M2-□□	81(76)	32(27)	141(135)	AA x 2	178
LCS135 -M3-□□	81(76)	32(27)	141(135)	AA x 3	183.5
LCS135 -9V -□□	81(76)	32(27)	141(135)	9V x 1	181.5
LCS135H-N -□□	81(76)	40(35)	141(135)	None	183
LCS135H-F4 -□□	81(76)	40(35)	141(135)	AAA x 4	197.5
LCS135H-M2-□□	81(76)	40(35)	141(135)	AA x 2	196.5
LCS135H-M3-□□	81(76)	40(35)	141(135)	AA x 3	201.5
LCS135H-9V -□□	81(76)	40(35)	141(135)	9V x 1	199
LCS145 -N -□□	101(96)	32(27)	151(145)	None	202
LCS145 -F6 -□□	101(96)	32(27)	151(145)	AAA x 6	222
LCS145 -M2-□□	101(96)	32(27)	151(145)	AA x 2	216
LCS145 -M4-□□	101(96)	32(27)	151(145)	AA x 4	223
LCS145H-N -□□	101(96)	40(35)	151(145)	None	224
LCS145H-F6 -□□	101(96)	40(35)	151(145)	AAA x 6	244.5
LCS145H-M2-□□	101(96)	40(35)	151(145)	AA x 2	238
LCS145H-M4-□□	101(96)	40(35)	151(145)	AA x 4	245
LCS165 -N -□□	85(80)	32(27)	171(165)	None	203
LCS165 -M4-□□	85(80)	32(27)	171(165)	AA x 4	222.5
LCS165H-N -□□	85(80)	40(35)	171(165)	None	220.5
LCS165H-M4-□□	85(80)	40(35)	171(165)	AA x 4	239.5

■ ( ) value = enclosure dimension.

Silicone cover dimensions

■ DXF/DWG/PDF drawings available on our website.

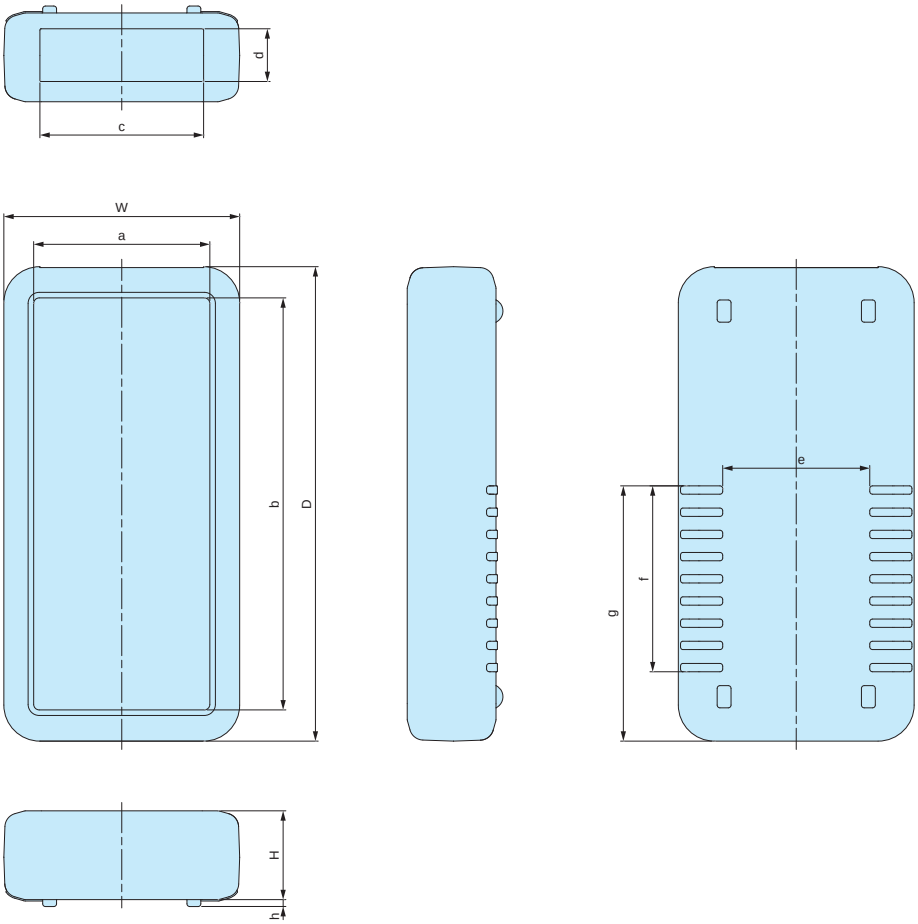

Product no.	W	H	D	a	b	c	d	e	f	g	h
LCS115 -N -□□	74	24	120	55.5	101.5	48.3	12	46	44.5	60.5	2
LCS115 -F2 -□□	74	24	120	55.5	101.5	48.3	12	46	44.5	60.5	2
LCS115 -F3 -□□	74	24	120	55.5	101.5	48.3	12	46	44.5	60.5	2
LCS115H-N -□□	74	32.5	120	55.5	101.5	48.3	20.5	46	44.5	60.5	2
LCS115H-F2 -□□	74	32.5	120	55.5	101.5	48.3	20.5	46	44.5	60.5	2
LCS115H-F3 -□□	74	32.5	120	55.5	101.5	48.3	20.5	46	44.5	60.5	2
LCS115H-M2-□□	74	32.5	120	55.5	101.5	48.3	20.5	46	44.5	60.5	2
LCS115H-9V -□□	74	32.5	120	55.5	101.5	48.3	20.5	46	44.5	60.5	2
LCS135 -N -□□	81	32	141	59.5	118.5	55	19	53	59	79	2.5
LCS135 -F4 -□□	81	32	141	59.5	118.5	55	19	53	59	79	2.5
LCS135 -M2-□□	81	32	141	59.5	118.5	55	19	53	59	79	2.5
LCS135 -M3-□□	81	32	141	59.5	118.5	55	19	53	59	79	2.5
LCS135 -9V -□□	81	32	141	59.5	118.5	55	19	53	59	79	2.5
LCS135H-N -□□	81	40	141	59.5	118.5	55	27	53	59	79	2.5
LCS135H-F4 -□□	81	40	141	59.5	118.5	55	27	53	59	79	2.5
LCS135H-M2-□□	81	40	141	59.5	118.5	55	27	53	59	79	2.5
LCS135H-M3-□□	81	40	141	59.5	118.5	55	27	53	59	79	2.5
LCS135H-9V -□□	81	40	141	59.5	118.5	55	27	53	59	79	2.5
LCS145 -N -□□	101	32	151	76.5	125.5	71	19	71	59	81	2.5
LCS145 -F6 -□□	101	32	151	76.5	125.5	71	19	71	59	81	2.5
LCS145 -M2-□□	101	32	151	76.5	125.5	71	19	71	59	81	2.5
LCS145 -M4-□□	101	32	151	76.5	125.5	71	19	71	59	81	2.5
LCS145H-N -□□	101	40	151	76.5	125.5	71	27	71	59	81	2.5
LCS145H-F6 -□□	101	40	151	76.5	125.5	71	27	71	59	81	2.5
LCS145H-M2-□□	101	40	151	76.5	125.5	71	27	71	59	81	2.5
LCS145H-M4-□□	101	40	151	76.5	125.5	71	27	71	59	81	2.5
LCS165 -N -□□	85	32	171	63.5	148.5	59	19	53	67	92	2.5
LCS165 -M4-□□	85	32	171	63.5	148.5	59	19	53	67	92	2.5
LCS165H-N -□□	85	40	171	63.5	148.5	59	27	53	67	92	2.5
LCS165H-M4-□□	85	40	171	63.5	148.5	59	27	53	67	92	2.5

Enclosure dimensions

■ DXF/DWG/PDF/STP drawings available on our website.

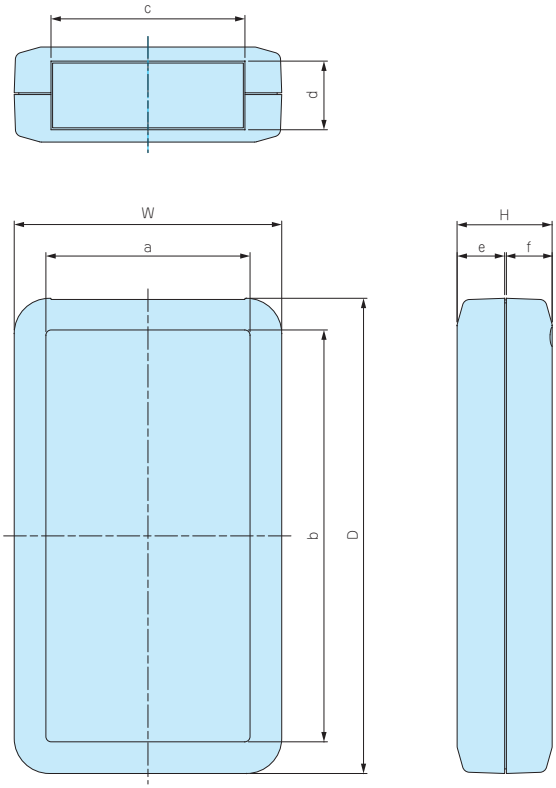

■ Please suffix color code at the end of the product number.

Product no.	W	H	D	a	b	c	d	e	f	Battery compartment
LCS115 -N -□□	69	19.5	115	54	100	48.1	12	10	9	None
LCS115 -F2 -□□	69	19.5	115	54	100	48.1	12	10	9	AAA x 2
LCS115 -F3 -□□	69	19.5	115	54	100	48.1	12	10	9	AAA x 3
LCS115H-N -□□	69	28	115	54	100	48.1	20.5	18.5	9	None
LCS115H-F2 -□□	69	28	115	54	100	48.1	20.5	18.5	9	AAA x 2
LCS115H-F3 -□□	69	28	115	54	100	48.1	20.5	18.5	9	AAA x 3
LCS115H-M2-□□	69	28	115	54	100	48.1	20.5	18.5	9	AA x 2
LCS115H-9V -□□	69	28	115	54	100	48.1	20.5	18.5	9	9V x 1
LCS135 -N -□□	76	27	135	58	117	55.1	19.5	13.5	13	None
LCS135 -F4 -□□	76	27	135	58	117	55.1	19.5	13.5	13	AAA x 4
LCS135 -M2-□□	76	27	135	58	117	55.1	19.5	13.5	13	AA x 2
LCS135 -M3-□□	76	27	135	58	117	55.1	19.5	13.5	13	AA x 3
LCS135 -9V -□□	76	27	135	58	117	55.1	19.5	13.5	13	9V x 1
LCS135H-N -□□	76	35	135	58	117	55.1	27.5	21.5	13	None
LCS135H-F4 -□□	76	35	135	58	117	55.1	27.5	21.5	13	AAA x 4
LCS135H-M2-□□	76	35	135	58	117	55.1	27.5	21.5	13	AA x 2
LCS135H-M3-□□	76	35	135	58	117	55.1	27.5	21.5	13	AA x 3
LCS135H-9V -□□	76	35	135	58	117	55.1	27.5	21.5	13	9V x 1
LCS145 -N -□□	96	27	145	75	124	71.1	19.5	14.5	12	None
LCS145 -F6 -□□	96	27	145	75	124	71.1	19.5	14.5	12	AAA x 6
LCS145 -M2-□□	96	27	145	75	124	71.1	19.5	14.5	12	AA x 2
LCS145 -M4-□□	96	27	145	75	124	71.1	19.5	14.5	12	AA x 4
LCS145H-N -□□	96	35	145	75	124	71.1	27.5	22.5	12	None
LCS145H-F6 -□□	96	35	145	75	124	71.1	27.5	22.5	12	AAA x 6
LCS145H-M2-□□	96	35	145	75	124	71.1	27.5	22.5	12	AA x 2
LCS145H-M4-□□	96	35	145	75	124	71.1	27.5	22.5	12	AA x 4
LCS165 -N -□□	80	27	165	62	147	59.1	19.5	13.5	13	None
LCS165 -M4-□□	80	27	165	62	147	59.1	19.5	13.5	13	AA x 4
LCS165H-N -□□	80	35	165	62	147	59.1	27.5	21.5	13	None
LCS165H-M4-□□	80	35	165	62	147	59.1	27.5	21.5	13	AA x 4

LC series HAND-HELD PLASTIC CASE

Technical Data
Protection class: IP40 Operating temperature: -10°C ~ +60°C

- Designed with beveled edges and rounded corners, and manufactured from flame-retardant ABS UL94V-0 material.
- Available in 9 different compartment types: AAx2, AAx3, AAx4, AAAx2, AAAx3, AAAx4, AAAx6, 9Vx1, and no battery compartment type.
- Positive (+) / negative (-) pole mark are incused within each battery compartment.
- Recommended to be used as measurement instruments, testing devices, wireless communication gadgets, medical equipment, and so on.

Battery compartment type

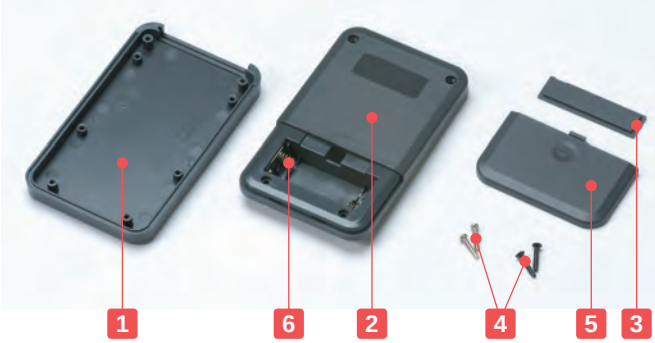

No battery compartment type

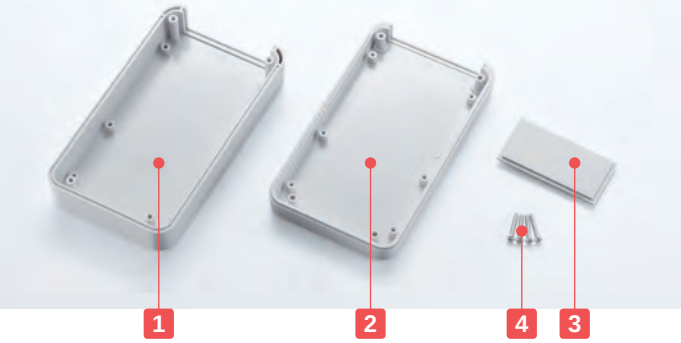

Components

No.	Part name	Pcs	Material	Color / Finish
1	Top cover	1	ABS UL94V-0	Off-white • Dark gray
2	Bottom cover	1	ABS UL94V-0	Off-white • Dark gray
3	Panel	1	ABS UL94V-0	Off-white • Dark gray
4	Self-tapping screw	4	Steel M2.6	Nickel plated • Black trivalent chromate
5	Battery cover	1	ABS UL94V-0	Off-white • Dark gray
6	Battery contact • Battery snap	1 set	Brass • Brass : PVC	Nickel plated

Accessories (Optional parts)

Tapping standoff TPS series
See page 122

PCB mounting screw EM-2.3
See page 123

Belt clip GDH series
See page 118

Key ring • Strap CR-20 • STP series
See page 96

Suspension bracket WM series
See page 116

Neodymium magnet NMG series
See page 117

LC dimensions

■ DXF/DWG/PDF/STP drawings available on our website.

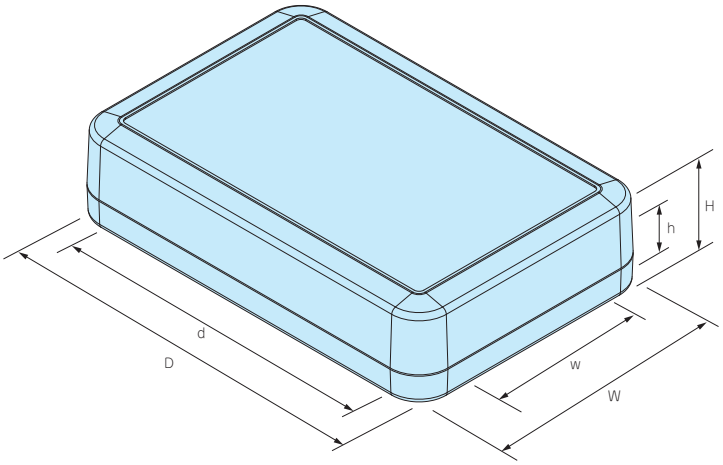

Battery Compartment Type

Type	N None	F2 AAAx2	F3 AAAx3	F4 AAAx4	F6 AAAx6	M2 AAx2	M3 AAx3	M4 AAx4	9V 9Vx1
Battery compartment	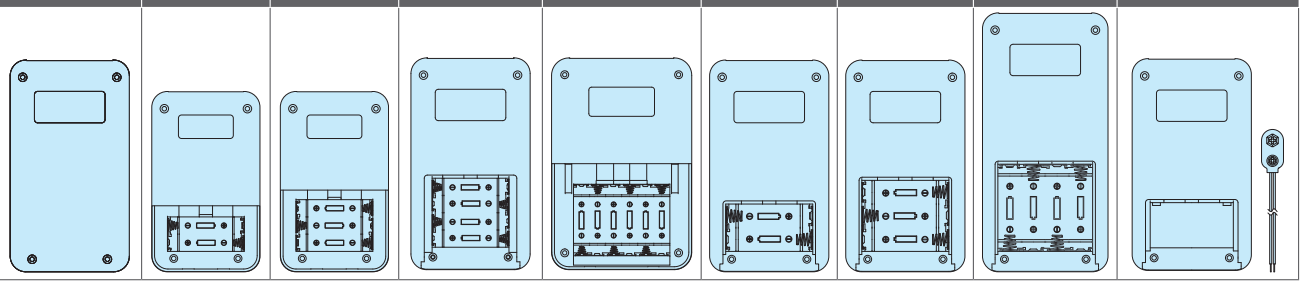								

Product no. / Dimensions

■ Please suffix color code at the end of the product number.

Product no.		External dimensions			Internal dimensions			Screw	Battery compartment	Weight (g)
● Dark gray	● Off-white	W	H	D	w	h	d			
LC115 -N -D	LC115 -N -W	69	19.5	115	61.5	9.5	86.5	M2.6-14 flat head x 4 pcs	None	70
LC115 -F2 -D	LC115 -F2 -W	69	19.5	115	61.5	9.5	63	M2.6-14 flat head x 2 pcs / M2.6-12 pan head x 2 pcs	AAA x 2	74.5
LC115 -F3 -D	LC115 -F3 -W	69	19.5	115	61.5	9.5	52	M2.6-14 flat head x 2 pcs / M2.6-12 pan head x 2 pcs	AAA x 3	76.5
LC115H -N -D	LC115H -N -W	69	28	115	60.9	18	86.5	M2.6-18 flat head x 4 pcs	None	80
LC115H -F2 -D	LC115H -F2 -W	69	28	115	60.9	18	63	M2.6-18 flat head x 2 pcs / M2.6-14 pan head x 2 pcs	AAA x 2	84.5
LC115H -F3 -D	LC115H -F3 -W	69	28	115	60.9	18	52	M2.6-18 flat head x 2 pcs / M2.6-14 pan head x 2 pcs	AAA x 3	86
LC115H -M2-D	LC115H -M2-W	69	28	115	60.9	18	54.8	M2.6-18 flat head x 2 pcs / M2.6-14 pan head x 2 pcs	AA x 2	88.5
LC115H -9V -D	LC115H -9V -W	69	28	115	60.9	18	55.7	M2.6-18 flat head x 2 pcs / M2.6-14 pan head x 2 pcs	9V x 1	88
LC135 -N -D	LC135 -N -W	76	27	135	68.2	16	107	M2.6-18 flat head x 4 pcs	None	95
LC135 -F4 -D	LC135 -F4 -W	76	27	135	68.2	16	59.2	M2.6-18 flat head x 2 pcs / M2.6-14 pan head x 2 pcs	AAA x 4	110
LC135 -M2-D	LC135 -M2-W	76	27	135	68.2	16	74.3	M2.6-18 flat head x 2 pcs / M2.6-14 pan head x 2 pcs	AA x 2	108
LC135 -M3-D	LC135 -M3-W	76	27	135	68.2	16	59.2	M2.6-18 flat head x 2 pcs / M2.6-14 pan head x 2 pcs	AA x 3	113.5
LC135 -9V -D	LC135 -9V -W	76	27	135	68.2	16	74.3	M2.6-18 flat head x 2 pcs / M2.6-14 pan head x 2 pcs	9V x 1	111.5
LC135H -N -D	LC135H -N -W	76	35	135	67.7	24	107	M2.6-18 flat head x 4 pcs	None	107.5
LC135H -F4 -D	LC135H -F4 -W	76	35	135	67.7	24	59.2	M2.6-18 flat head x 2 pcs / M2.6-14 pan head x 2 pcs	AAA x 4	122
LC135H -M2-D	LC135H -M2-W	76	35	135	67.7	24	74.3	M2.6-18 flat head x 2 pcs / M2.6-14 pan head x 2 pcs	AA x 2	121
LC135H -M3-D	LC135H -M3-W	76	35	135	67.7	24	59.2	M2.6-18 flat head x 2 pcs / M2.6-14 pan head x 2 pcs	AA x 3	126
LC135H -9V -D	LC135H -9V -W	76	35	135	67.7	24	74.3	M2.6-18 flat head x 2 pcs / M2.6-14 pan head x 2 pcs	9V x 1	123.5
LC145S -N -D	LC145S -N -W	96	20	145	87.9	9.5	112.9	M2.6-14 flat head x 4 pcs	None	110
LC145S -F6 -D	LC145S -F6 -W	96	20	145	88.1	9.2	67.8	M2.6-14 flat head x 2 pcs / M2.6-12 pan head x 2 pcs	AAA x 6	130
LC145 -N -D	LC145 -N -W	96	27	145	87.8	16.5	112.9	M2.6-18 flat head x 4 pcs	None	121
LC145 -F6 -D	LC145 -F6 -W	96	27	145	87.8	16.5	67.8	M2.6-18 flat head x 2 pcs / M2.6-14 pan head x 2 pcs	AAA x 6	141
LC145 -M2-D	LC145 -M2-W	96	27	145	87.8	16.5	86.8	M2.6-18 flat head x 2 pcs / M2.6-14 pan head x 2 pcs	AA x 2	135
LC145 -M4-D	LC145 -M4-W	96	27	145	87.8	16.5	63.4	M2.6-18 flat head x 2 pcs / M2.6-14 pan head x 2 pcs	AA x 4	142
LC145H -N -D	LC145H -N -W	96	35	145	87.2	24.5	112.9	M2.6-18 flat head x 4 pcs	None	135
LC145H -F6 -D	LC145H -F6 -W	96	35	145	87.2	24.5	67.8	M2.6-18 flat head x 2 pcs / M2.6-14 pan head x 2 pcs	AAA x 6	155.5
LC145H -M2-D	LC145H -M2-W	96	35	145	87.2	24.5	86.8	M2.6-18 flat head x 2 pcs / M2.6-14 pan head x 2 pcs	AA x 2	149
LC145H -M4-D	LC145H -M4-W	96	35	145	87.2	24.5	63.4	M2.6-18 flat head x 2 pcs / M2.6-14 pan head x 2 pcs	AA x 4	156
LC165 -N -D	LC165 -N -W	80	27	165	72.2	16	137	M2.6-18 flat head x 4 pcs	None	120.5
LC165 -M4-D	LC165 -M4-W	80	27	165	72.2	16	79	M2.6-18 flat head x 2 pcs / M2.6-14 pan head x 2 pcs	AA x 4	140
LC165H -N -D	LC165H -N -W	80	35	165	71.7	24	137	M2.6-18 flat head x 4 pcs	None	134.5
LC165H -M4-D	LC165H -M4-W	80	35	165	71.7	24	79	M2.6-18 flat head x 2 pcs / M2.6-14 pan head x 2 pcs	AA x 4	153.5

LCE series EMC SHIELDED HAND-HELD PLASTIC CASE

EMC Shielding Effects

Technical Data
Protection class: IP40 Operating temperature: -10°C ~ +60°C

- LCE series is an EMC shielded version of LC hand-held plastic case coated internally with DOTITE conductive paint (acrylic paint mixed with nickel filler).
- Designed with beveled edges and rounded corners, and manufactured from flame-resistant ABS UL94V-0 material.
- Recommended to be used as measurement instruments, testing devices, wireless communication gadgets, medical equipment, and so on.

Components

No.	Part name	Pcs	Material	Color / Finish	Conductive paint
1	Top cover	1	ABS UL94V-0	Dark gray	DOTITE
2	Bottom cover	1	ABS UL94V-0	Dark gray	DOTITE
3	Panel	1	ABS UL94V-0	Dark gray	DOTITE
4	Self-tapping screw	4	Steel M2.6	Black trivalent chromate	–

Accessories (Optional parts)

Silicone cover LCTP • LCSC series
See page 79 ~ 80

Tapping standoff TPS series
See page 122

PCB mounting screw EM-2.3
See page 123

TORX screw MR series
See page 123

Suspension bracket WM series
See page 116

LCE dimensions

■ DXF/DWG/PDF/STP drawings available on our website.

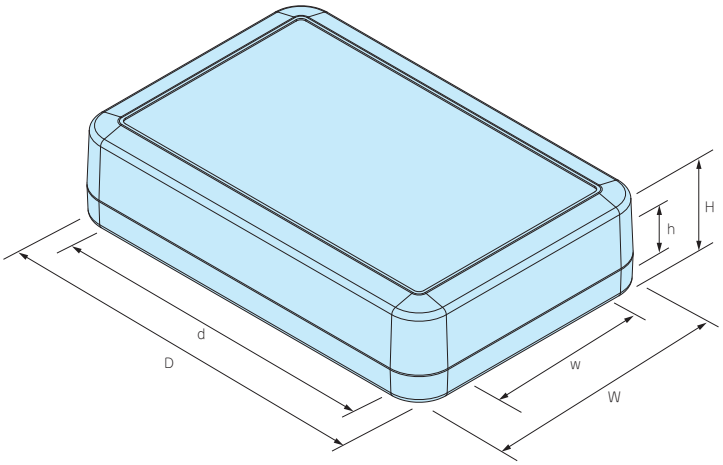

Product no. / Dimensions

Product no.	External dimensions			Internal dimensions			Screw	Weight (g)
	W	H	D	w	h	d		
LCE115 -N -D	69	19.5	115	61.5	9.5	86.5	M2.6-18 flat head x 4 pcs	72.5
LCE115H -N -D	69	28	115	60.9	18	86.5	M2.6-18 flat head x 4 pcs	84
LCE135 -N -D	76	27	135	68.2	16	107	M2.6-18 flat head x 4 pcs	97
LCE145H -N -D	96	35	145	87.2	24.5	112.9	M2.6-18 flat head x 4 pcs	137
LCE165H -N -D	80	35	165	71.7	24	137	M2.6-18 flat head x 4 pcs	139

CONDUCTIVE PAINT CUSTOMIZATION AVAILABLE for LC series.

The LCE series are a selected few models of the LC series, customized with conductive paint.
Other LC series enclosures not listed can also be customized with conductive paint.

Contact us for more details.
E-mail : sales@takachi-el.co.jp

LCTP series SHOCKPROOF SILICONE COVER for LC • LCE

Color Type

Code	O Orange	G Green	N Navy	D Dark gray
Color				

- Shock-proof silicone cover for LC and LCE series.
- Custom color is available from just 1 pc. For 500 pcs or more, manufacture costs will be similar to a standard color. Please inquire for more details. For custom color order, please specify **PANTONE**® color code.

LCTP dimensions

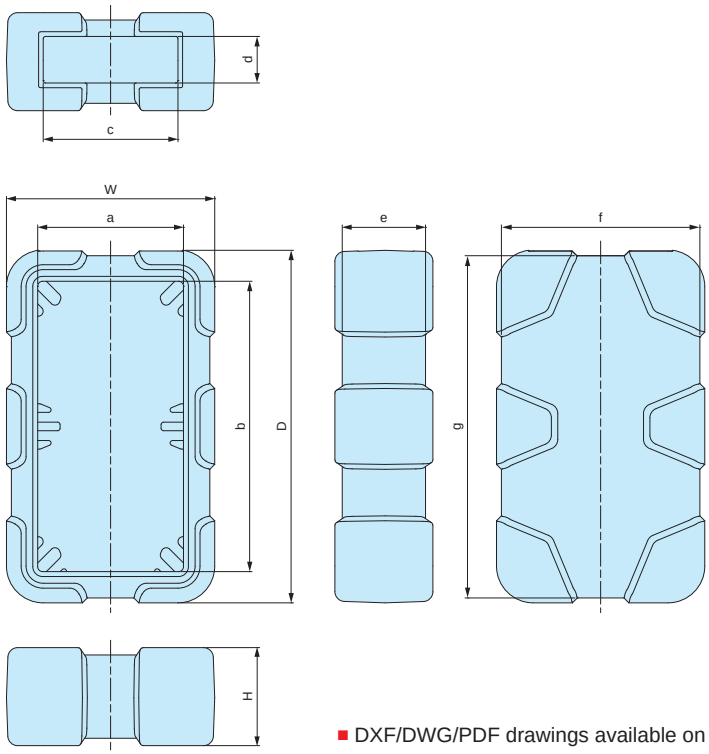

APPLICATION EXAMPLE

Ultrasonic Hardness Tester
Product by NOVOTEST (Ukraine)

- DXF/DWG/PDF drawings available on our website.

Components

Part name	Material	Color
Silicone cover	Silicone	Orange • Green • Navy • Dark gray

Product no. / Dimensions

- Please suffix color code at the end of the product number.

Product no.	W	H	D	a	b	c	d	e	f	g	Suitable models	Weight (g)
LCTP115 -□	76	28	121.9	55.5	101.5	48.3	12	24	72	117.8	LC • LCE115	53.5
LCTP115H -□	76	36.5	121.9	55.5	101.5	48.3	20.5	32.5	72	117.8	LC • LCE115H	61
LCTP135 -□	85	40	143.9	59.5	118.5	55	19	34	81	139.7	LC • LCE135	115.5
LCTP135H -□	85	48	143.9	59.5	118.5	55	27	42	81	139.6	LC135H	124
LCTP145 -□	105	40	153.9	76.5	125.5	71	19	34	101	149.7	LC145	137.5
LCTP145H -□	105	48	153.9	76.5	125.5	71	27	42	101	149.7	LC • LCE145H	147
LCTP165 -□	89	40	173.9	63.5	148.5	59	19	34	85	169.7	LC165	143
LCTP165H -□	89	48	173.9	63.5	148.5	59	27	42	85	169.6	LC • LCE165H	151.5

LCSC series SILICONE COVER for LC • LCE

Color Type

Code	R Red	G Green	B Blue	D Dark gray	L Light gray
Color					

- Silicone cover for LC and LCE series.
- Custom color is available from just 1 pc. For 500pcs or more, manufacture costs will be similar to a standard color. Please inquire for more details. For custom color order, please specify **PANTONE**® color code.

LCSC dimensions

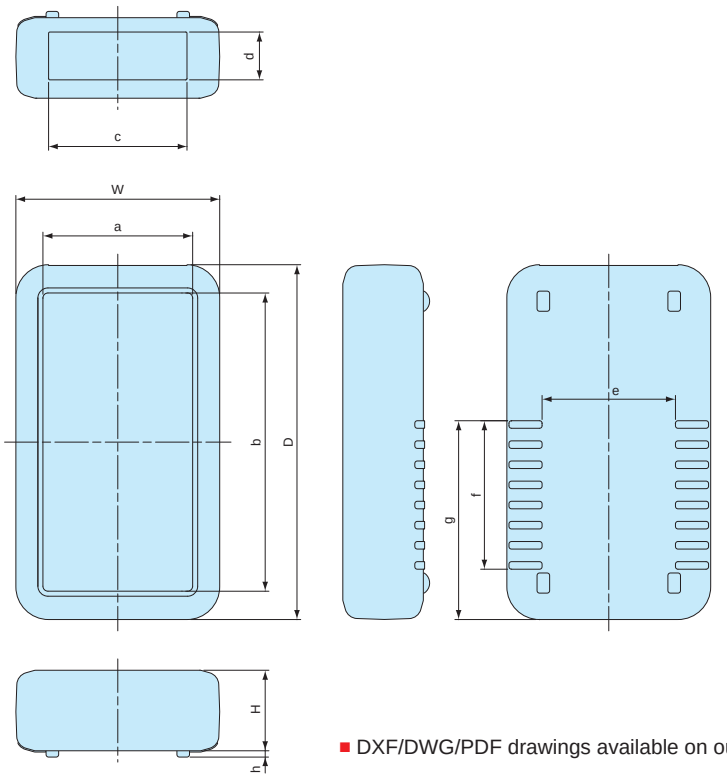

APPLICATION EXAMPLE

Temperature Surveillance Sensor

Product by SENFIO (Brazil)

- DXF/DWG/PDF drawings available on our website.

Components

Part name	Material	Color
Silicone cover	Silicone	Red • Green • Blue • Light gray • Dark gray

Product no. / Dimensions

- Please suffix color code at the end of the product number.

Product no.	W	H	D	a	b	c	d	e	f	g	h	Suitable models	Weight (g)
LCSC115 -☐	74	24	120	55.5	101.5	48.3	12	46	44.5	60.5	2	LC • LCE115	43
LCSC115H-☐	74	32.5	120	55.5	101.5	48.3	20.5	46	44.5	60.5	2	LC • LCE115H	50
LCSC135 -☐	81	32	141	59.5	118.5	55	19	53	59	79	2.5	LC • LCE135	70
LCSC135H-☐	81	40	141	59.5	118.5	55	27	53	59	79	2.5	LC135H	75.5
LCSC145 -☐	101	32	151	76.5	125.5	71	19	71	59	81	2.5	LC145	81
LCSC145H-☐	101	40	151	76.5	125.5	71	27	71	59	81	2.5	LC • LCE145H	89
LCSC165 -☐	85	32	171	63.5	148.5	59	19	53	67	92	2.5	LC165	82.5
LCSC165H-☐	85	40	171	63.5	148.5	59	27	53	67	92	2.5	LC • LCE165H	86

TAKACHI

CSS·CS series

Slim designed small type handheld enclosures
with built-in coin cell battery compartment.
Suitable for IOT device, Remote controller, Portable GPS,
Wireless key-fob, RFID tag, small device, and so on.
4 different sizes with 10 color variations each are available.

•Built-in battery compartment

NEW SIZE

for CR2450/CR2477

Black | Light gray | Orange | Green | Cyan

APPLICATION EXAMPLE

Motor Sport Infrared Laptimer (Bluetooth 4.0 & Android Application)

Product by General Mechatronics (Hungary)

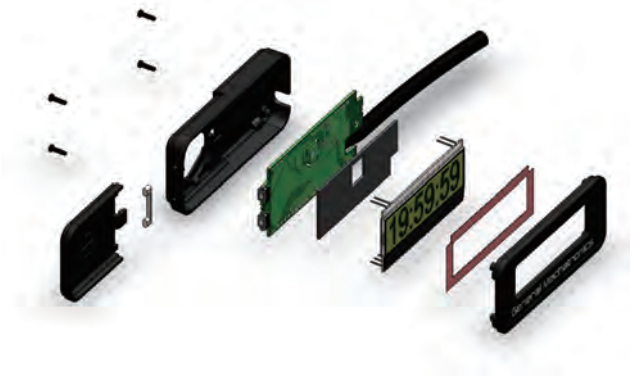

Bluetooth Temperature Data Logger

Product by Almendo Technologies (Germany)

Impact Detection Sensor for Relay Tester

Product by MUSASHI INTECH (Japan)

Wireless Remote Control Switch

Product by HERUTU ELECTRONICS (Japan)

Handi Quilter Easy-Set Tension™ Kit

Product by Handi Quilter (USA)

Wireless Microphone for Hearing Aid

Product by Audinor (Norway)

USB Noise Remover

Product by SPEC (Japan)

High Frequency Preamplifier

Product by NATEC (Japan)

Indoor Environment Sensor

Product by Bunnyhop (Japan)

Detection Sensor for Wandering Behavior

Product by Tecnos Japan (Japan)

Serial EEPROM Programmers

Product by SolitonWave (Japan)

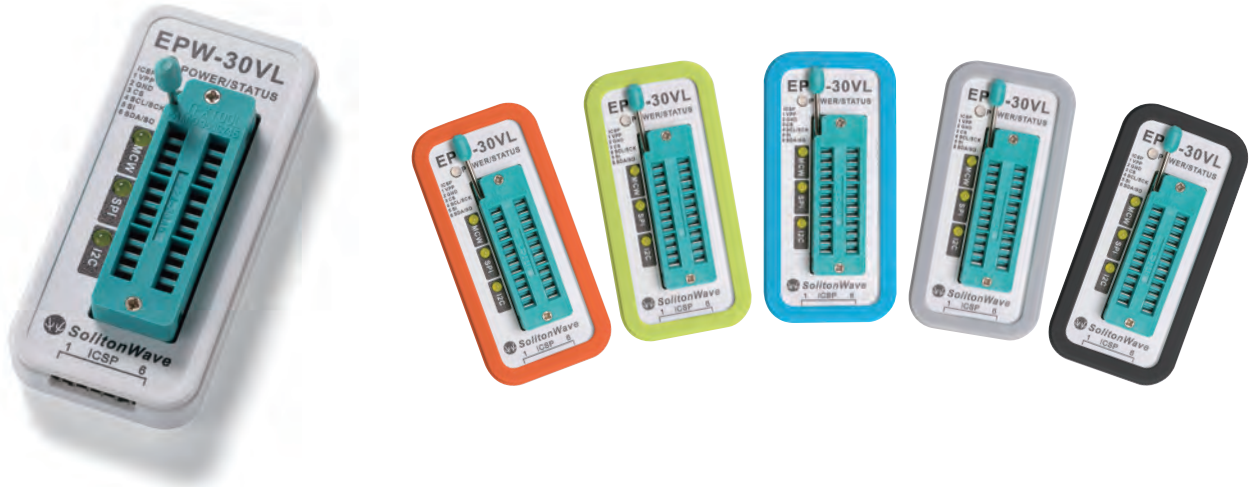

RFID Reader

Product by e-Tech (Japan)

HoneyBee Proximity Switch

Product by ADAPTIVATION (USA)

Restroom Monitoring System

Product by KYOHRITSU ELECTRONIC INDUSTRY (Japan)

HID RFID Reader/Writer

Product by ART Finex (Japan)

Dual-frequency GNSS Receiver

Product by CORE (Japan)

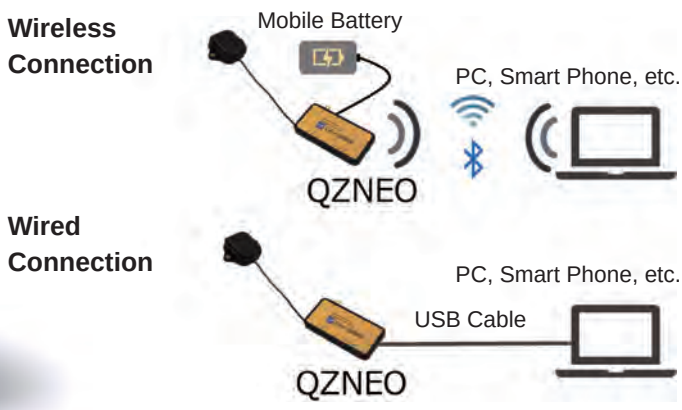

CSS series PORTABLE PLASTIC CASE with SILICONE COVER

NEW SIZE

- Small plastic case with silicone cover. Strong against drop impact while providing a secure grip.
- New CSS100 models compatible with CR2450/CR2477 batteries now available.
- Select proper models by enclosure dimensions and capacity of the batteries.
  Typical Capacity : CR2032 : 225mAh / CR2450 : 620mAh / CR2477 : 1000mAh
- Suitable for remote controller, wireless key fob, small tester/device and so on.
- Available in 4 sizes with 16 models and selectable in 10 different color combinations.
- 2 types of silicone cover available with (Open) and without (Closed) rectangular cutout on the top side.

Technical Data
Protection class: IP40 Operating temperature: -10°C ~ +60°C

No battery compartment type

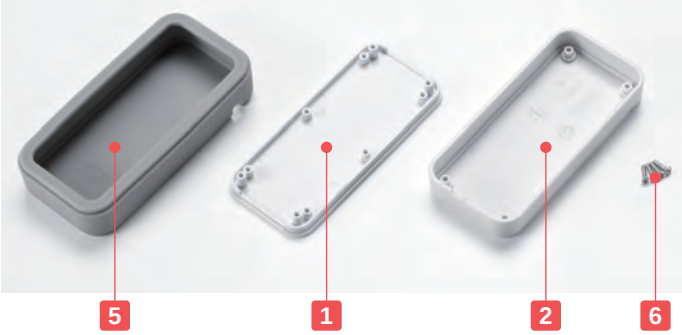

Battery compartment type

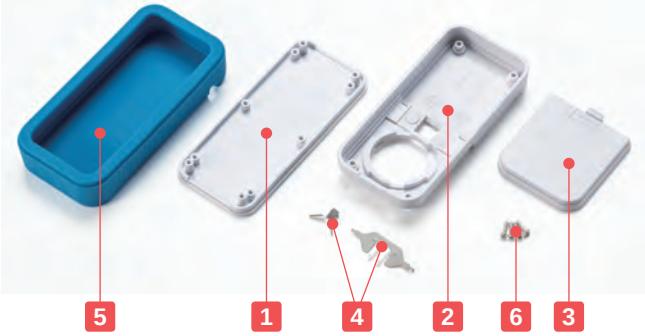

Components

No.	Part name	Pcs	Material	Color / Finish
1	Top cover	1	ABS UL94HB	White • Black
2	Bottom cover	1	ABS UL94HB	White • Black
3	Battery cover	1	ABS UL94HB	White • Black
4	Battery contact	1 set / 2 sets (CSS115)	Stainless steel SUS304	Nickel plated
5	Silicone cover	1	Silicone	Orange • Green • Cyan • Light gray • Black
6	Self-tapping screw	4	Steel M1.6-6	Nickel plated • Black trivalent chromate

Accessories (Optional parts)

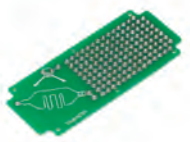

Exclusive PCB CSPB series
See page 90

Strap STPS series
See page 95

PCB mounting screw EM-1.6
See page 123

TORX screw MR1.6-6S
See page 123

Silicone Cover Type

Code	CL Closed	OP Open
Shape		

Color Type

Code	BO Black / Orange	BG Black / Green	BC Black / Cyan	BL Black / Light gray	BB Black / Black
Color					
Code	**WO White / Orange**	**WG White / Green**	**WC White / Cyan**	**WL White / Light gray**	**WB White / Black**
Color					

CSS dimensions

■ DXF/DWG/PDF/STP drawings available on our website.

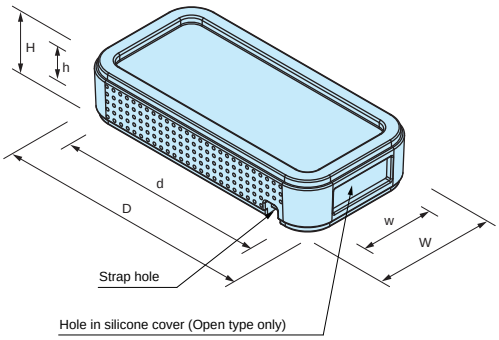

Type	CSS N Type	CSS75/90	NEW CSS100 *1	CSS115
Battery compartment	None	CR2032 × 1	CR2450 × 1 or CR2477 *2 × 1	CR2032 × 2
	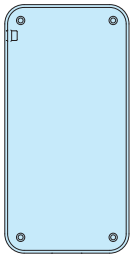	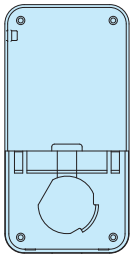	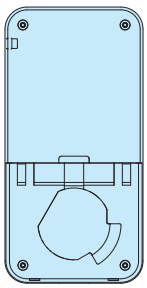	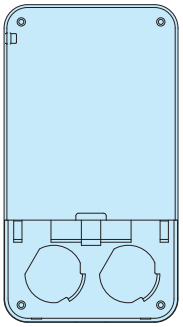

*1 CSS100 battery type varies by PCB placement: CR2450 with PCB on bottom cover, or CR2477 with PCB on top cover. See page CS-2 for the details.
*2 Not compatible with Renata CR2477N battery.

Product no. / Dimensions

■ Please suffix color code at the end of the product number.

Product no.	External dimensions			Internal dimensions			Battery compartment	Weight (g)
	W	H	D	w	h	d		
CSS 75N -CL -□□	38.6 (35)	15.5 (12)	78.6 (75)	26.6	5.3	59	None	24
CSS 75N -OP-□□	38.6 (35)	15.5 (12)	78.6 (75)	26.6	5.3	59	None	24
CSS 75 -CL -□□	38.6 (35)	15.5 (12)	78.6 (75)	26.6	5.3	25.4	CR2032×1	25
CSS 75 -OP-□□	38.6 (35)	15.5 (12)	78.6 (75)	26.6	5.3	25.4	CR2032×1	25
CSS 90N -CL -□□	48.6 (45)	15.5 (12)	93.6 (90)	36.6	5.3	74	None	36
CSS 90N -OP-□□	48.6 (45)	15.5 (12)	93.6 (90)	36.6	5.3	74	None	35
CSS 90 -CL -□□	48.6 (45)	15.5 (12)	93.6 (90)	36.6	5.3	40.4	CR2032×1	38
CSS 90 -OP-□□	48.6 (45)	15.5 (12)	93.6 (90)	36.6	5.3	40.4	CR2032×1	37
NEW CSS100N -CL -□□	54.1 (50)	20.8 (16.8)	104.1 (100)	41.6	10.1	82	None	52
NEW CSS100N -OP-□□	54.1 (50)	20.8 (16.8)	104.1 (100)	41.6	10.1	82	None	51
NEW CSS100 -CL -□□	54.1 (50)	20.8 (16.8)	104.1 (100)	44.1	6.8	46	CR2450×1 / CR2477×1	54
NEW CSS100 -OP-□□	54.1 (50)	20.8 (16.8)	104.1 (100)	44.1	6.8	46	CR2450×1 / CR2477×1	53
CSS115N -CL -□□	67.1 (63)	16 (12)	119.1 (115)	54.6	5.3	98	None	62
CSS115N -OP-□□	67.1 (63)	16 (12)	119.1 (115)	54.6	5.3	98	None	61
CSS115 -CL -□□	67.1 (63)	16 (12)	119.1 (115)	54.6	5.3	64.9	CR2032×2	65
CSS115 -OP-□□	67.1 (63)	16 (12)	119.1 (115)	54.6	5.3	64.9	CR2032×2	64

■ ( ) value = enclosure dimension.

CS series PORTABLE PLASTIC CASE

NEW SIZE

- New CS100 model compatible with CR2450/CR2477 batteries is now available.
- Easy replacement of batteries. Battery contact included in each case (except for N type).
- Select proper models by enclosure dimensions and capacity of the batteries.
  Typical Capacity : CR2032 : 225mAh / CR2450 : 620mAh / CR2477 : 1000mAh
- Suitable for remote controller, wireless key fob, or small tester/device, and so on.
- Available in 4 sizes with 8 models and selectable in 2 different color types (Black or White).

Technical Data
Protection class: IP40 Operating temperature: -10°C ~ +60°C

No battery compartment type

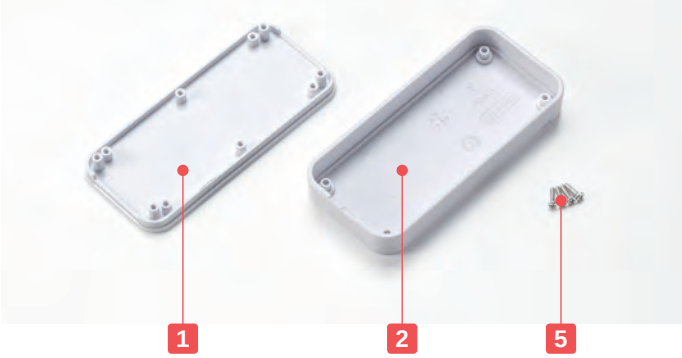

Battery compartment type

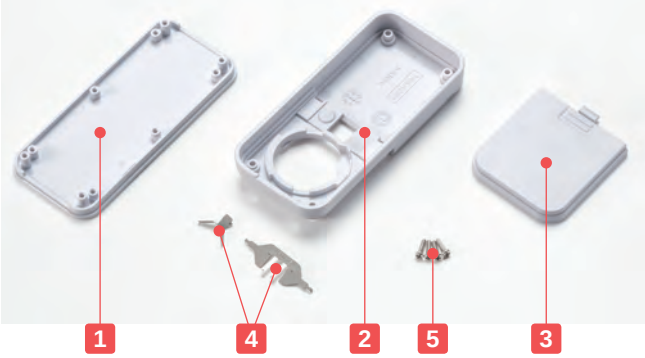

Components

No.	Part name	Pcs	Material	Color / Finish
1	Top cover	1	ABS UL94HB	White • Black
2	Bottom cover	1	ABS UL94HB	White • Black
3	Battery cover	1	ABS UL94HB	White • Black
4	Battery contact	1 set / 2 sets (CS115)	Stainless steel SUS304	Nickel plated
5	Self-tapping screw	4	Steel M1.6-6	Nickel plated • Black trivalent chromate

Accessories (Optional parts)

Exclusive PCB CSPB series
See page 90

Strap STPS series
See page 95

PCB mounting screw EM-1.6
See page 123

TORX screw MR1.6-6S
See page 123

Coin Battery Contact Installation Steps

Soldering the contacts on PCB

Installing PCB on top cover

All set

■ Exclusive PCB is available as an optional part. See page CSPB-1 for more details.Refer to drawings on page CSPB-1 for suitable PCB dimensions and screw hole layout.

CS dimensions

■ DXF/DWG/PDF/STP drawings available on our website.

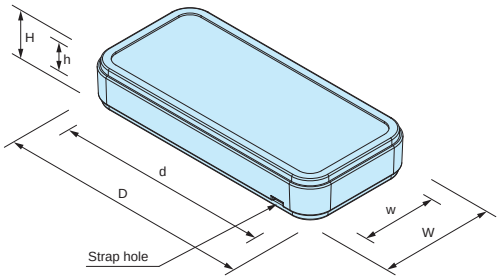

Type	CS N Type	CS75/90	NEW CS100 *1	CS115
Battery compartment	None	CR2032 × 1	CR2450 × 1 or CR2477 *2 × 1	CR2032 × 2

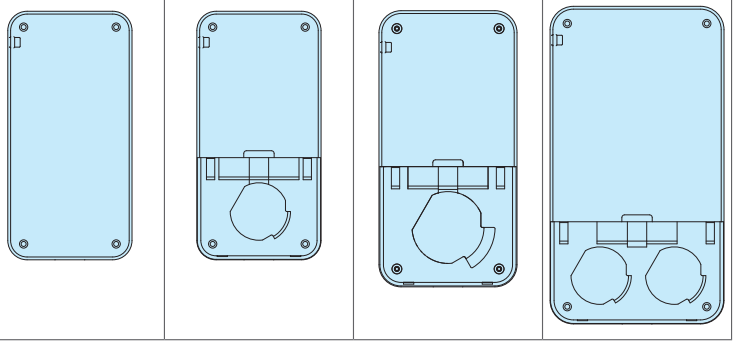

*1 CS100 battery type varies by PCB placement: CR2450 with PCB on bottom cover, or CR2477 with PCB on top cover. See below for the details.
*2 Not compatible with Renata CR2477N battery.

CR2450 × 1 on CS100 (PCB on bottom cover)

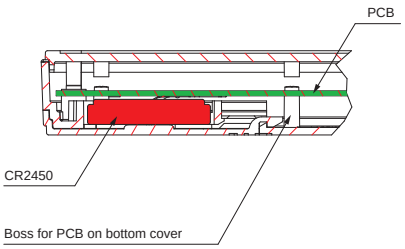

CR2477 x 1 on CS100 (PCB on top cover)

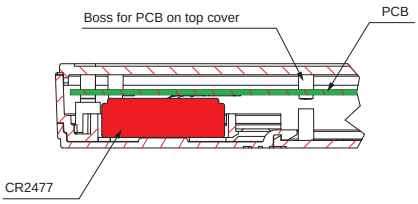

*Not compatible with Renata CR2477N battery

Product no. / Dimensions

Product no.		External dimensions			Internal dimensions			Battery compartment	Weight (g)
● Black	● White	W	H	D	w	h	d		
CS 75N-B	CS 75N-W	35	12	75	26.6	5.3	59	None	12
CS 75 -B	CS 75 -W	35	12	75	26.6	5.3	25.4	CR2032×1	13
CS 90N-B	CS 90N-W	45	12	90	36.6	5.3	74	None	18
CS 90 -B	CS 90 -W	45	12	90	36.6	5.3	40.4	CR2032×1	20
NEW CS100N-B	NEW CS100N-W	50	16.8	100	41.6	10.1	82	None	24
NEW CS100 -B	NEW CS100 -W	50	16.8	100	44.1	6.8	46	CR2450×1 / CR2477×1	26
CS115N-B	CS115N-W	63	12	115	54.6	5.3	98	None	30
CS115 -B	CS115 -W	63	12	115	54.6	5.3	64.9	CR2032×2	33

CSSC series SILICONE COVER for CS

NEW SIZE

Silicone Cover Type

Code	CL Closed	OP Open
Shape		

- 2 types of silicone cover which have with (Open) and without (Closed) rectangular cutout on the front side; selectable in 5 different colors.
- Custom color is available from just 1 pc. For 500 pcs or more, manufacture costs will be similar to a standard color. Please inquire for more details. For custom color order, please specify **PANTONE**® color code.

Color Type

Code	O Orange	G Green	C Cyan	L Light gray	B Black
Color					

CSSC dimensions

- DXF/DWG/PDF drawings available on our website.

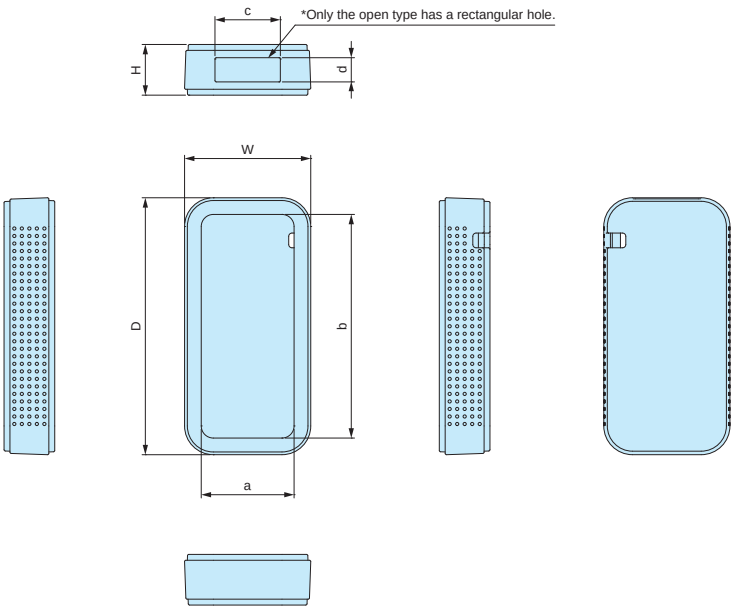

Components

Part name	Material	Color
Silicone cover	Silicone	Orange • Green • Cyan • Light gray • Black

Product no. / Dimensions

- Please suffix color code at the end of the product number.

Product no.	W	H	D	a	b	c	d	Suitable models	Weight (g)
CSSC 75-CL-□	38.6	15.5	78.6	28.4	68.4	–	–	CS 75	12
CSSC 75-OP-□	38.6	15.5	78.6	28.4	68.4	20	7.4	CS 75	12
CSSC 90-CL-□	48.6	15.5	93.6	37.4	82.4	–	–	CS 90	18
CSSC 90-OP-□	48.6	15.5	93.6	37.4	82.4	30	7.4	CS 90	17
NEW CSSC100-CL-□	54.1	20.8	104.1	42.4	92.4	–	–	CS100	28
NEW CSSC100-OP-□	54.1	20.8	104.1	42.4	92.4	33	12.2	CS100	27
CSSC115-CL-□	67.1	16	119.1	55.4	107.4	–	–	CS115	32
CSSC115-OP-□	67.1	16	119.1	55.4	107.4	45	7.4	CS115	31

CSPB series EXCLUSIVE PCB for CS • CSS

NEW SIZE

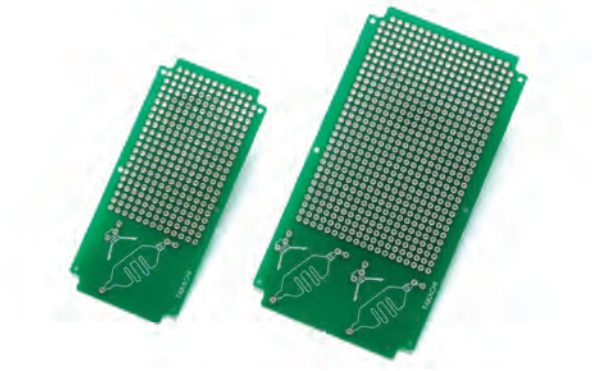

- Exclusive PCB for CS and CSS series.
- Glass epoxy board (FR-4), through-hole on both sides and 2.54mm hole distance.
- Prefabricated holes for battery contact use with CS • CSS case. The contact directions are printed on the PCB.

Soldering the battery contacts (included with each case) onto the PCB

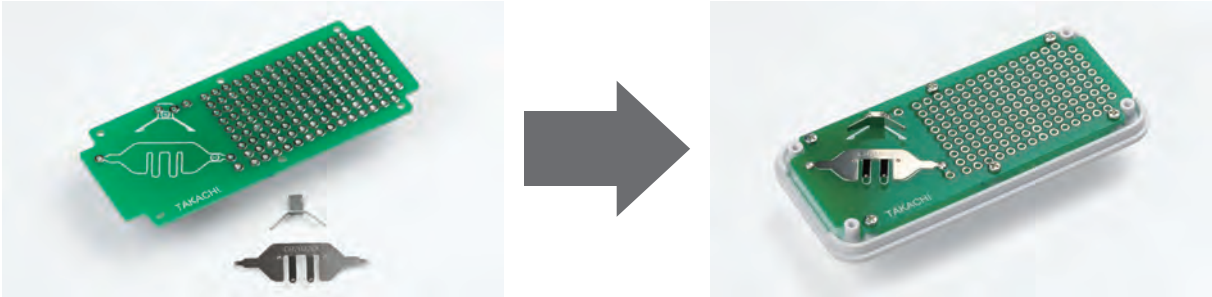

Components

Part name	Pcs	Material	Color / Finish
PCB	1	Glass epoxy (FR-4) t=1.0	Through-hole • Lead-free solder • Solder resist
Self-tapping screw	6	Steel M1.6	Trivalent chromate

CSPB dimensions

- DXF/DWG/PDF drawings available on our website.

CSPB-75 • 90 • 100

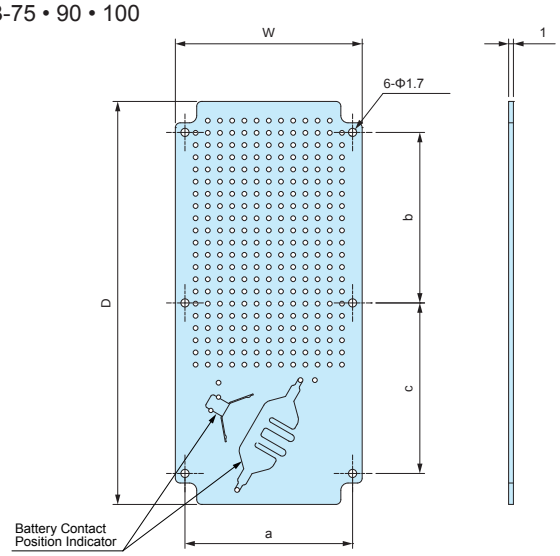

CSPB-115

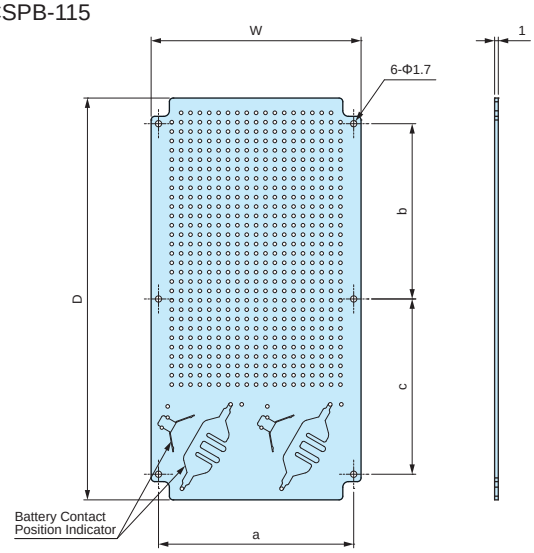

Note : Holes (6-Φ1.7) for PCB mount bosses are un-soldered.

Product no. / Dimensions

Product no.	W	D	a	b	c	Suitable models
CSPB- 75	28.9	68.9	24.9	28	28	CSS 75 • CS 75
CSPB- 90	38.9	83.9	34.9	35.5	35.5	CSS 90 • CS 90
NEW CSPB-100	45	94	38	31	38	CSS100 • CS100
CSPB-115	56.9	108.9	52.9	47.5	47.5	CSS115 • CS115

PS series PORTABLE PLASTIC CASE

Suitable for wireless device, remote controller, key fob, and so on.
Available in 4 different sizes with 5 selectable colors.

Portable SIGFOX Multi-Sensor System

Product by Axible Technologies (France)

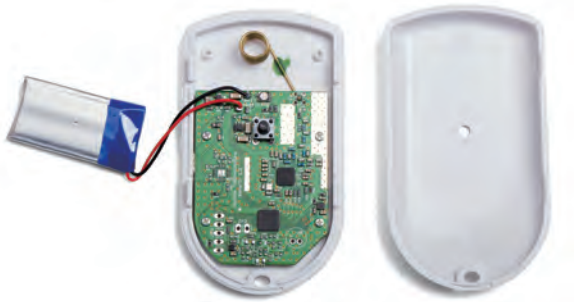

Multi-sensor system which detects motion, temperature, humidity and sound. Warnings are sent to the owner, or 3rd parties via SMS, Twitter or Facebook when events such as a home invasion, or when a fire occurs.

SIGFOX is:

A French company that builds wireless ultra-narrow band (UNB) networks, for the connection of low-energy consumption devices such as electricity meters, smart-watches, and washing machines, which needs to be continuously on and emitting small amounts of data. This wireless network technology, which is aimed at the Internet of Things (IoT), is starting to gain popularity and rolling out in the fields such as housing, automobiles, transportation and logistics, smart city connectivity, healthcare, and so on.

GPS Tracker Tag (via SIGFOX Network)

Product by HidnSeek (France)

Example: Locating your car in a large parking area

APPLICATION EXAMPLE

Remote Controller for Undercover Investigation

Product by CopTech (Germany)

Re-Mote Suite-IoT Development Platform

Product by Zolertia (Spain)

Beacon Receiver

Product by GP Shopper (USA)

GPS Tracker with Temperature Data Logger

Product by HidnSeek (France)

Portable Radiation Detector

Product by Yamagata Kyodo (Japan)

Remote Controller for Metal Sensor Reel

Product by HATAYA (Japan)

LPWA Receiver

PS series PORTABLE PLASTIC CASE

Technical Data
Protection class: IP40 Operating temperature: -10°C ~ +60°C

- Simple snap-in case without screws.
- Comfortable shape and hold.
- 5 different colors are available for selection.
- Suitable for use as a wireless device, remote control, key fob etc.
- Designed with an easily accessible hole for strap attachment.

Components

No.	Part name	Material	Color / Finish
1	Rounded cover	ABS UL94HB	White • Black • Cobalt • Green • Pink
2	Flat cover	ABS UL94HB	White • Black • Cobalt • Green • Pink

Product no. / Dimensions

Product no.					Dimensions			Weight (g)
● White	● Black	● Cobalt	● Green	○ Pink	W	H	D	
PS- 50W	PS- 50B	PS- 50C	PS- 50G	PS- 50P	50	14	50	9
PS- 65W	PS- 65B	PS- 65C	PS- 65G	PS- 65P	35	11	65	9
PS- 85W	PS- 85B	PS- 85C	PS- 85G	PS- 85P	48	15	85	20
PS-100W	PS-100B	PS-100C	PS-100G	PS-100P	58	18	100	27

Accessories (Optional parts)

PCB mounting screw EM-1.6
See page 123

Strap STPS series
See page 95

Neodymium magnet NMG series
See page 116

PS dimensions

■ DXF/DWG/PDF/STP drawings available on our website.

PS-50□

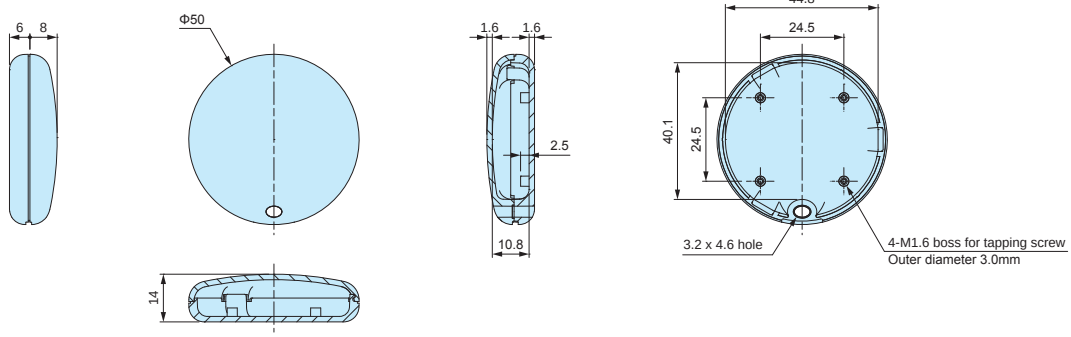

PS-65□

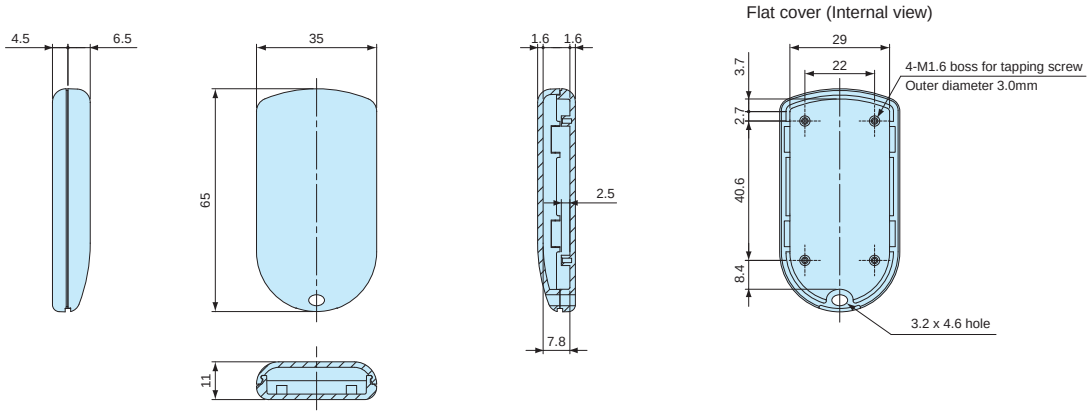

PS-85□ / PS-100□

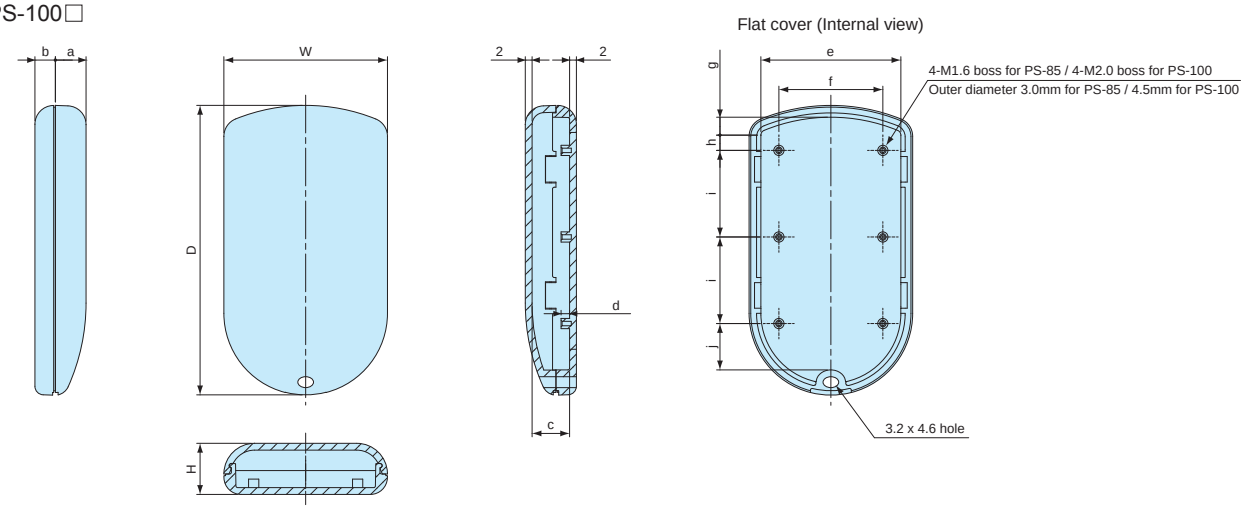

Product no.	W	H	D	a	b	c	d	e	f	g	h	i	j
PS- 85□	48	11	85	9	6	11	2.5	41.1	33	5.3	4.5	25.4	13.6
PS-100□	58	18	100	11.5	6.5	14	4	51.2	40	6.4	4.2	29	20.4

Application example (RFID Tag)

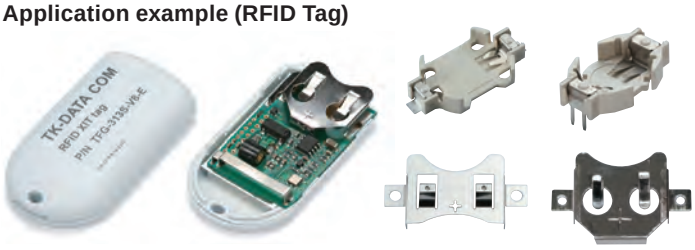

■ Various coin cell battery holders can be utilized.
See coin cell battery holders on our website for more details.
Refer to the chart for compatible holders.

■ Chart on the right is based upon mounting onto a 1.0mm thick PCB.

■ Please note that depending on the mounting location, PCB may not be able to be properly affixed on.

COMPATIBLE COIN CELL BATTERY HOLDERS CHART

Product no.	Compatible coin cell battery holders
PS- 50□	SMTU1220(G) / 1225 / 1362(G) / 2-2016 / 2032(G) PB-621 / SMTM1632 / 2032 BK-879 / 5091 / 5067 / 888
PS- 65□	BK-879 / 5091 / 5067 / 888 PB621 / SMTM1225 / 1632 / 2032
PS- 85□	PB621 / SMTM1632 / 2032 BK-879 / 5091 / 5067 / 888 SMTU1220(G) / 1225 / 1632(G) / 2-2016 / 2032(G) / 2430
PS-100□	PB621 / SMTM1632 / 2032 BK-879 / 5091 / 5067 / 888 SMTU1220(G) / 1225 / 1632(G) / 2-2016 / 2032(G) / 2430 / 2450 BCR20H4 / BCR20H5

STPS series STRAP

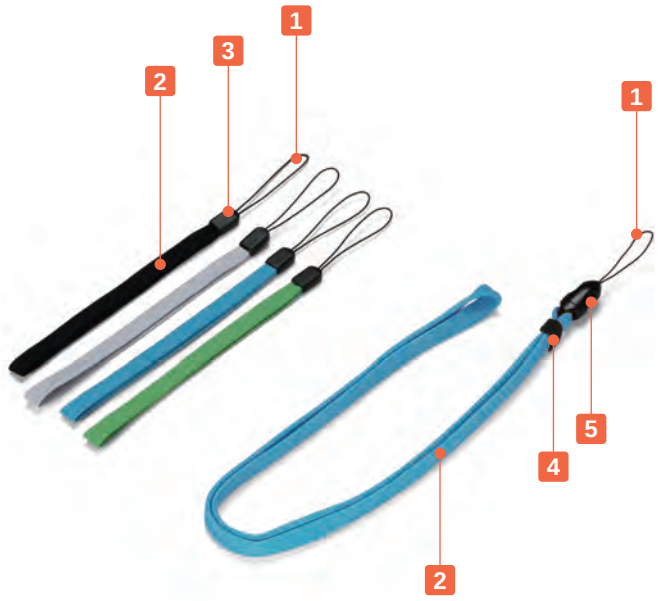

APPLICATION EXAMPLE

Wrist strap (STPS-140G)

Neck strap (STPS-450C)

- Colorful and sturdy straps best used with CSS, CS and PS series.
- Wrist and Neck straps are available in 4 unique colors.
- Neck strap comes with a quick-release joint, making removal or attachment quick and easy.

Quick-release joint
(Neck strap only)

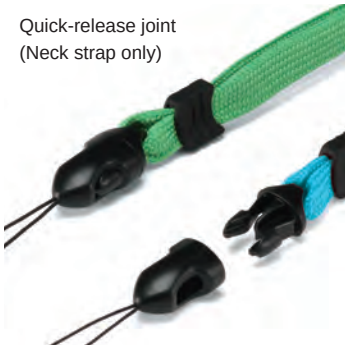

Color Type

Code	G Green	C Cyan	L Light gray	B Black
Color				

Components

No.	Part name	Material	Color
1	String	Polyester	Black
2	Strap	Polyester	Green • Cyan • Light gray • Black
3	Cap (wrist strap only)	Nylon	Black
4	Clamp (neck strap only)	Elastomer	Black
5	Joint (neck strap only)	Polyacetal	Black

Product no. / Dimensions

Product no.				Strap width	Strap length
Green	Cyan	Light gray	Black		
STPS-140G	STPS-140C	STPS-140L	STPS-140B	8	140
STPS-450G	STPS-450C	STPS-450L	STPS-450B	10	450

STP series STRAP

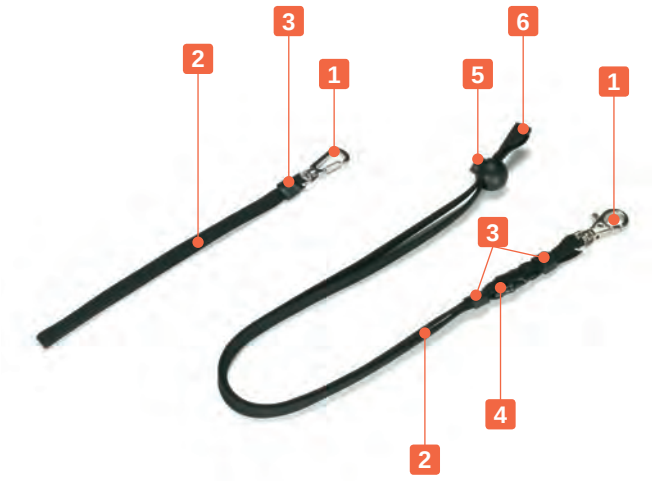

Wrist strap (STP-200)

Neck strap (STP-450)

- Strap with a metal hook
- Recommended to be used with CR key ring.

Neck strap detail

Quick-release joint

Adjuster

- Only the neck strap has a joint and an adjuster.

Components

No.	Part name	Pcs	Material	Color / Finish
1	Metal hook	1	Diecast zinc & steel	Nickel plated
2	Strap	1	Nylon / Polyester	Black
3	Cap	1 / 2	Polyurethane / Elastomer	Black
4	Joint (Neck strap only)	1	Polyacetal	Black
5	Adjuster (Neck strap only)	1	Nylon	Black
6	Clamp (Neck strap only)	1	PE	Black

Product no. / Dimensions

Product no.	Strap width	Strap length	Strap material	Cap material
STP-200	8	200	Nylon	Polyurethane x 1
STP-450	10	450	Polyester	Elastomer x 2

CR-20 KEY RING

- Hole milling is required for case installation.

CR-20 dimensions

- DXF/DWG/PDF drawings available on our website.

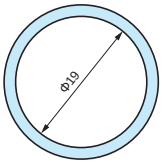

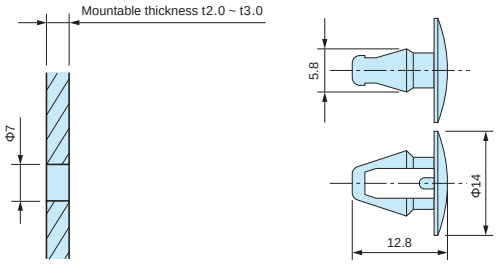

Components

Part name	Material	Color / Finish
Ring	SWRM 6 Steel	Nickel plated
Insert clip	Nylon	Black

Product no. / Dimensions

Product no.	Ring Φ	Installation hole	Mounting thickness
CR-20	Φ19	Φ7	t2.0 ~ t3.0

WSC series

IP67 SLOPED PLASTIC CASE

Ergonomic design and streamlined shape

Best suited for desktop operation with its sloped surface.
2 different inclined angles, 13° and 18° are available to select for various operating environments.
Streamlined shape enables the unit to be gripped better when used as a handheld instrument.

Photo : 13° type

Best suited for desktop operation with its sloped surface

High elasticity and good durability for maintaining waterproofing capability.
Built-in insert nut use for long-lasting protection even after frequent opening and closing.

APPLICATION EXAMPLE

Medical Measurement Device • Medical Controller

Transmitter • Network Equipment

RFID Card Reader

RFID Reader for ICT Entry/Exit System "KIDSNA connect" for Daycare/Preschool

Product by nextbeat (Japan)

Information on waterproofing after hole milling for switches

The waterproof performance will be lost once hole or cutout is machined on an IP rated enclosure.
To ensure it remains waterproof after hole/cutout machining, IP rated membrane pad or overlay is required.

Information on affixing of cables into waterproof enclosures

Please utilize a cable gland from our available range of cable gland accessories.

WSC series IP67 SLOPED PLASTIC CASE

IP67

Technical Data

Protection class : IP67
Operating temperature : -10°C ~ +60°C
Recommended torque : 0.2 ~ 0.3N • m

- Suitable as a desktop controller or measurement instrument with its ergonomic design.
- Streamlined shape enables the unit to be gripped better when used as a handheld instrument.
- IP67 protection class allows the unit to be used outdoors or under environments with water splashes, such as medical, research or measurement equipment.

Components

No.	Part name	Pcs	Material	Color / Finish
1	Top Cover	1	Flame-resistant ABS UL94V-0	Off-white • Black
2	Bottom base	1	Flame-resistant ABS UL94V-0	Off-white • Black
3	Gasket	1	Silicone	Black
4	Screw	4	Stainless steel binding head M2.5-8	Unfinished
5	Rubber feet	4	Polyurethane	Transparent

Accessories (Optional parts)

PCB mounting screw EM series
See page 123

Adhesive standoff AST series
See page 121

TORX screw MR series
See page 123

Cable gland
See page 333 ~ 340

WSC dimensions

■ DXF/DWG/PDF/STP drawings available on our website.

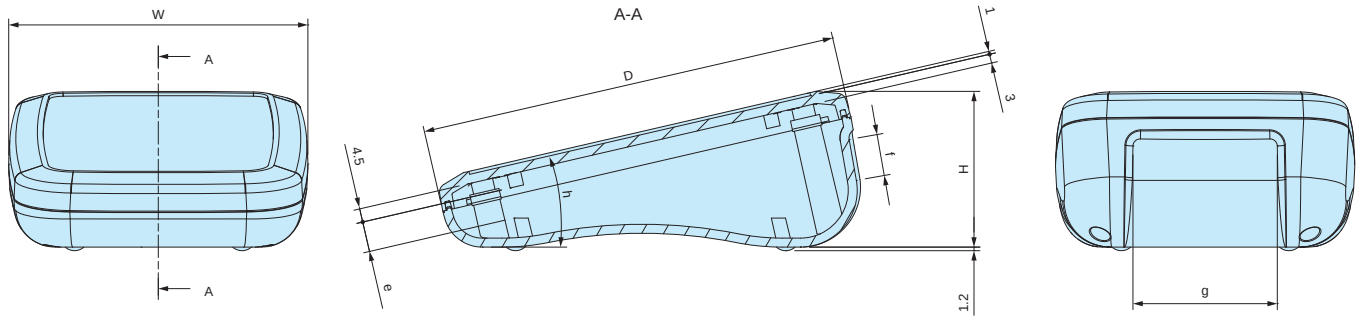

Top Cover (External)

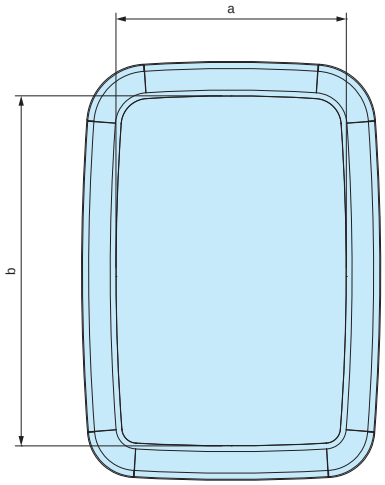

Top Cover (Internal)

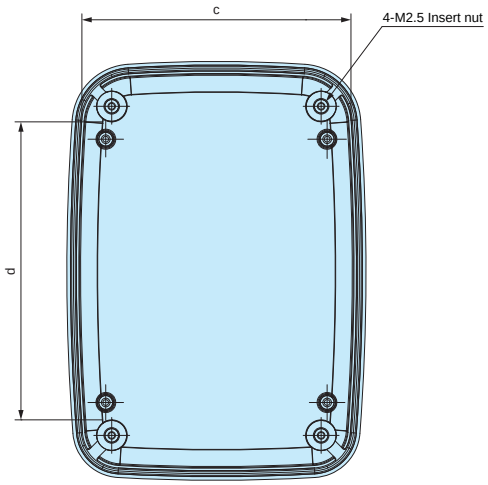

Product no. / Dimensions

Product no.		Dimensions										Face angle	Weight (g)
● Off-white	● Black	W	D	H	a	b	c	d	e	f	g	h	
WSC10-14-5W	WSC10-14-5B	100	140	52	77	117	87	100	10	13.9	48.2	13°	145
WSC10-14-7W	WSC10-14-7B	100	140	72	77	117	87	100	22	27.4	48.2	18°	168
WSC14-14-5W	WSC14-14-5B	140	140	52	117	117	128	100	10	13.8	80.5	13°	190
WSC14-14-7W	WSC14-14-7B	140	140	72	117	117	128	100	22	27.4	80.5	18°	218
WSC18-14-5W	WSC18-14-5B	175	140	52	152	117	163	95	11.3	13.8	103.5	13°	234
WSC18-14-7W	WSC18-14-7B	175	140	72	152	117	163	95	23.7	27.4	103.5	18°	262

Accessories (Optional parts)

WSP-M2.3 INCLINED SPACER for WSC

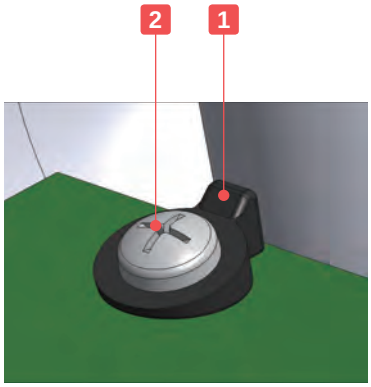

- Due to the sloped shape of the WSC series, boss-tops are also angled. So when mounting PCB on, some gap between the screw head and PCB surface will be generated as shown the diagram. WSP-M2.3 helps to fill the gap.
- EM-2.3-8 as PCB mounting screws are available for bosses in bottom base. (See page 123)

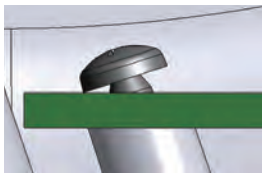

Components

No.	Part name	Pcs	Material	Color / Finish
1	Inclined spacer	4	POM	Black
2	Screw (Tapping M2.3-8)	4	Steel	Trivalent chromate

■ **Torque 0.1N • m**

Product no. / Details

Product no.	Suitable models	Pack of
WSP-M2.3	WSC (for bottom base PCB boss)	4

TWS series

PLASTIC ENCLOSURE with SILICONE PROTECTOR

Universal plastic enclosure with protective silicone protectors which functions both as an anti-slip grip and impact protection. Available in 9 sizes and selectable in 8 different color combinations. Suitable for measuring instruments, wireless communication devices, portable controller, data logger, and so on.

APPLICATION EXAMPLE

Digital Power Amplifier

Product by Dream (Japan)

GPS Data Logger

Product by Reds Fixit Shop (USA)

6 Channel Data Logger

Product by Irisense (UK)

Wireless Gateway

Product by Bresimar Automação (Portugal)

Tester for Photovoltaic System

Product by System JD (Japan)

Solar Cell Bypass Diode Checker

Product by Nippon Kernel System (Japan)

PV Insulation Resistance Checker for Solar Cell

Product by Shin-ei Electronic Measuring (Japan)

Vibration Monitor

Product by SIGMA Electronics (Japan)

TWS series PLASTIC ENCLOSURE with SILICONE PROTECTOR

Green and Pink shown above are custom colors.

Technical Data
Protection class: IP40 Operating temperature: -10°C ~ +60°C

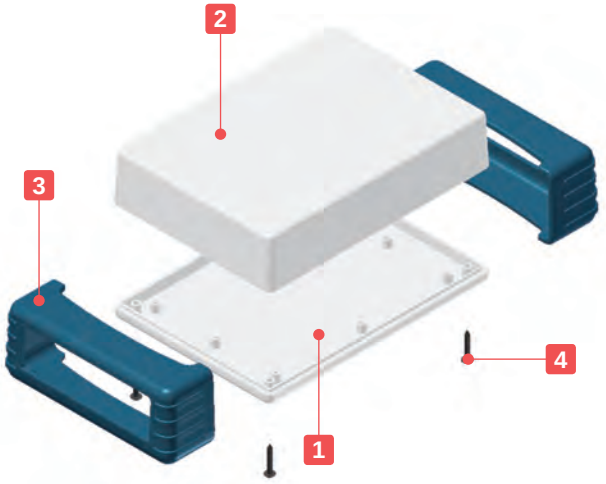

- Universal plastic enclosure with protective silicone protectors which functions both as an anti-slip grip and impact protection.
- Available in 9 sizes and selectable in 8 different color combinations.
- Enclosure is in B (Black - ABS UL94HB) and W (Off-white - ABS UL94V-0) model.
- Plastic case and protective silicone with screw fastening.
  *Note: utilize screws packaged with the silicone protectors for assembly.
- Use caution when assembling. Overtightening may damage the enclosure and silicone protectors.
- Custom color silicone protector is available from just 1 set. For 500 sets or more, manufacture costs will be similar to a standard color.
  Please inquire for more details.

Components

No.	Part name	Pcs	Material : Color / Finish
1	Cover	1	ABS UL94HB : Black • ABS UL94V-0 : Off-white
2	Bottom base	1	ABS UL94HB : Black • ABS UL94V-0 : Off-white
3	Silicone protector	2	Silicone : Yellow • Navy • Light gray • Black
4	Self-tapping screw	4	Steel M3-20 / Black trivalent chromate

Accessories (Optional parts)

Embedded battery box BC series
See page 125 ~ 128

Adhesive standoff AST series
See page 121

Tapping standoff TPS series
See page 122

PCB mounting screw EM series
See page 123

Color Type

Code	B Y Black / Yellow	B N Black / Navy	B L Black / Light gray	B B Black / Black
Color				
Code	**W Y Off-white / Yellow**	**W N Off-white / Navy**	**W L Off-white / Light gray**	**W B Off-white / Black**
Color				

ABS UL94HB (Black enclosure)

Product no. / Dimensions

■ Please suffix color code at the end of the product number.

Product no.	W	H	D	Weight (g)
TWS 7-3-13B□	71 (65)	32 (25.6)	136 (130)	117
TWS 7-5-13B□	71 (65)	56 (50.1)	136 (130)	147.5
TWS 9-4-17B□	91.5 (85.5)	41.5 (35.5)	176 (170)	193
TWS 9-6-17B□	91.5 (85.5)	66.5 (60.5)	176 (170)	243
TWS11-5-22B□	116 (110)	51.5 (45.3)	226 (220)	325.5
TWS11-8-22B□	116 (110)	81.5 (75.3)	226 (220)	399
TWS13-5-13B□	131 (125)	51 (45)	131 (125)	269.5
TWS13-5-18B□	131 (125)	51 (45)	181 (175)	322
TWS13-7-18B□	131 (125)	71 (65)	181 (175)	371

■ ( ) value = enclosure dimension.

ABS UL94V-0 (Off-white enclosure)

Product no. / Dimensions

■ Please suffix color code at the end of the product number.

Product no.	W	H	D	Weight (g)
TWS 7-3-13W□	71 (65)	32 (25.6)	136 (130)	126
TWS 7-5-13W□	71 (65)	56 (50.1)	136 (130)	163
TWS 9-4-17W□	91.5 (85.5)	41.5 (35.5)	176 (170)	211
TWS 9-6-17W□	91.5 (85.5)	66.5 (60.5)	176 (170)	266
TWS11-5-22W□	116 (110)	51.5 (45.3)	226 (220)	356.5
TWS11-8-22W□	116 (110)	81.5 (75.3)	226 (220)	438
TWS13-5-13W□	131 (125)	51 (45)	131 (125)	294
TWS13-5-18W□	131 (125)	51 (45)	181 (175)	353
TWS13-7-18W□	131 (125)	71 (65)	181 (175)	407.5

■ ( ) value = enclosure dimension.

TWS dimensions

■ DXF/DWG/PDF/STP drawings available on our website.

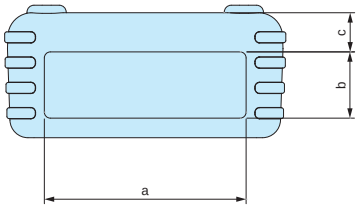

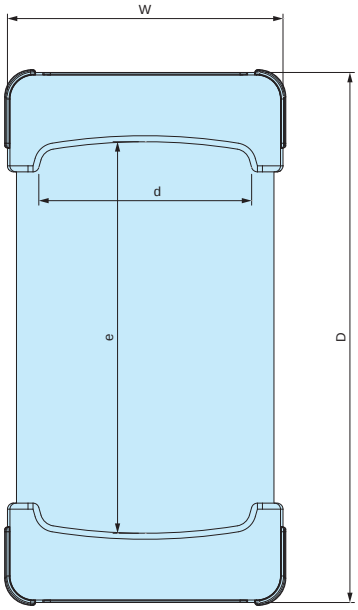

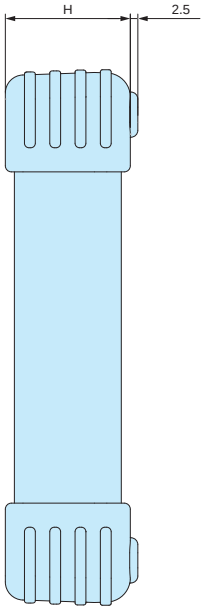

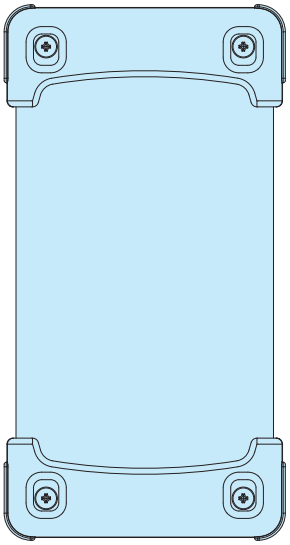

■ Please suffix color code at the end of the product number.

Product no.	W	H	D	a	b	c	d	e
TWS 7-3-13□□	71	32	136	52	13.5	11.8	54	98
TWS 7-5-13□□	71	56	136	52	37.5	11.9	54	98
TWS 9-4-17□□	91.5	41.5	176	67	22	13	71	130
TWS 9-6-17□□	91.5	66.5	176	67	46.5	13.3	71	130
TWS11-5-22□□	116	51.5	226	80	29	14.3	89	166
TWS11-8-22□□	116	81.5	226	80	58	14.5	89	166
TWS13-5-13□□	131	51	131	101	29.5	13.5	104	76
TWS13-5-18□□	131	51	181	101	29.5	13.5	104	126
TWS13-7-18□□	131	71	181	101	48.5	14	104	126

Enclosure dimensions

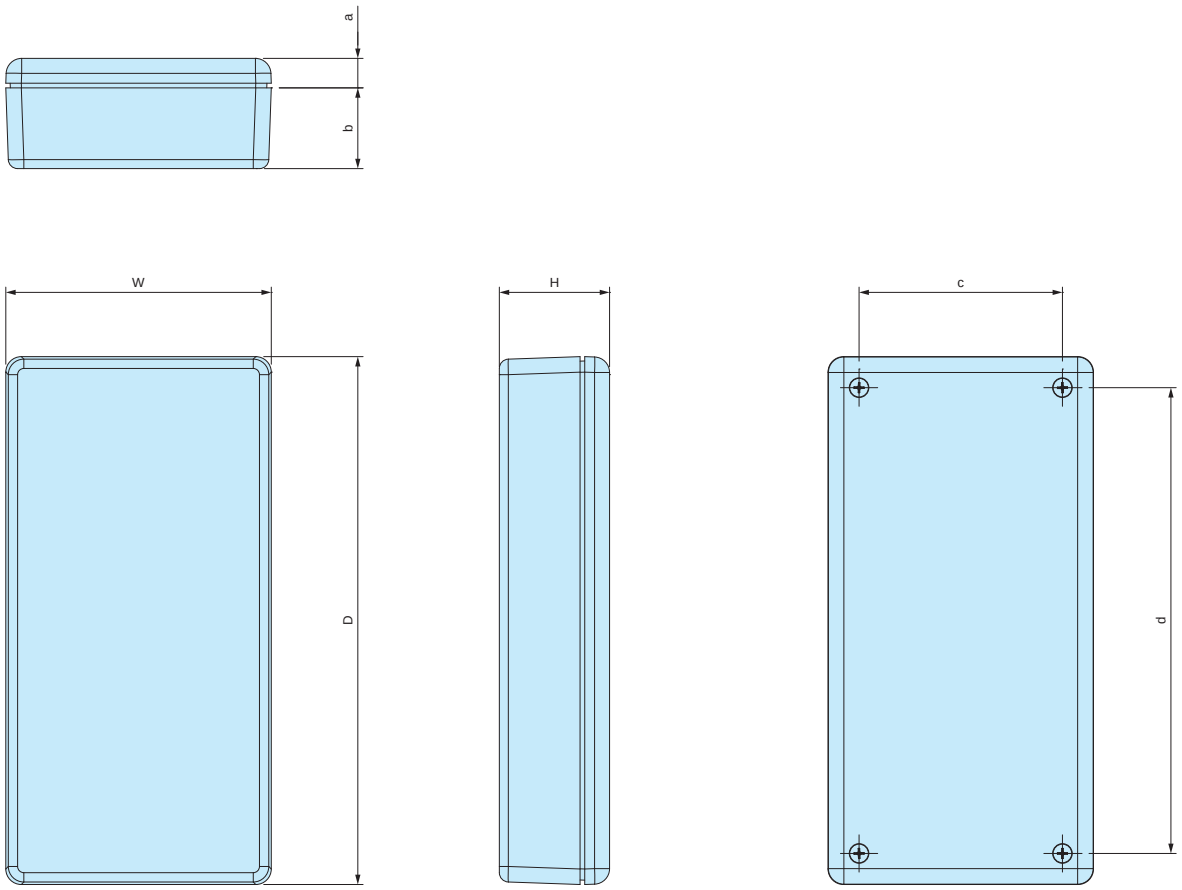

■ Please suffix color code at the end of the product number.

Product no.	W	H	D	a	b	c	d
TWS 7-3-13□□	65	25.6	130	8.1	17.5	47	112
TWS 7-5-13□□	65	50.1	130	8.1	42	47	112
TWS 9-4-17□□	85.5	35.5	170	9.5	26	65.5	150
TWS 9-6-17□□	85.5	60.5	170	9.5	51	65.5	150
TWS11-5-22□□	110	45.3	220	10.3	35	88	198
TWS11-8-22□□	110	75.3	220	10.3	65	88	198
TWS13-5-13□□	125	45	125	8.5	36.5	107	107
TWS13-5-18□□	125	45	175	8.5	36.5	105	155
TWS13-7-18□□	125	65	175	8.5	56.5	105	155

TW•TWN series MULTIPURPOSE PLASTIC ENCLOSURE

NEW SIZE

Technical Data

Protection class: IP40
Operating temperature: -10°C ~ +60°C

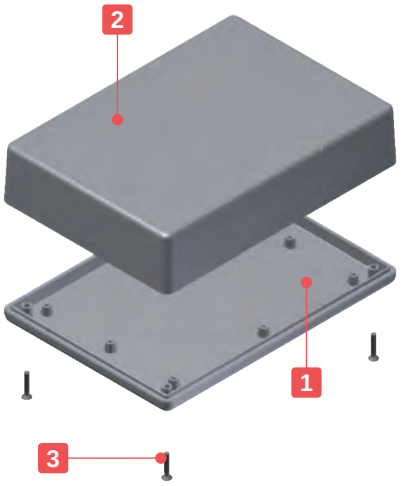

- Universal plastic enclosure with screw fastening.
- 26 sizes are available in 2 colors; Black (ABS UL94HB) and Off-white (ABS UL94V-0).
- Suitable for measuring instruments, testing devices, wireless communication devices, medical devices, and so on.

Components

No.	Part name	Pcs	Material : Color / Finish
1	Cover	1	TW : ABSUL94HB / Black
			TWN : ABS UL94V-0 / Off-white
2	Bottom base	1	TW : ABSUL94HB / Black
			TWN : ABS UL94V-0 / Off-white
3	Self-tapping screw	2 or 4	TW : Steel / Black trivalent chromate
			TWN : Steel / Nickel plated

Accessories (Optional parts)

Silicone band SIB series
See page 110

Suspension bracket WM series
See page 116

Embedded battery box BC series
See page 125 ~ 128

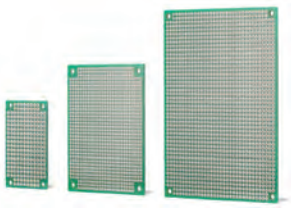

Universal PCB PCB series
See website

Adhesive standoff AST series
See page 121

PCB mounting screw EM series
See page 123

Tapping standoff TPS series
See page 122

Color Type

Series	Code	Color	Screw
TW	B	Black	Black trivalent chromate
TWN	W	Off-white	Nickel plated

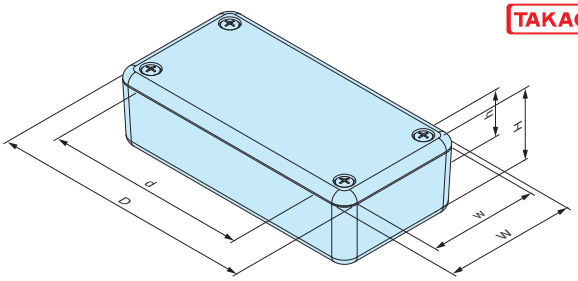

TW series (ABS UL94HB)

■ DXF/DWG/PDF/STP drawings available on our website.

Product no. / Dimensions

Product no.	External dimensions			Internal dimensions			Screw (Self-tapping flat head)	Weight (g)
	W	H	D	w	h	d		
TW 4-2- 5B	35	20	50	28.2	12	32.6	M2.6-12 x 2 pcs	13.5
TW 4-2- 6B	35	20	60	28.2	12	42.6	M2.6-12 x 2 pcs	15.5
TW 4-2- 8B	40.3	20	80.3	33.5	12	62.5	M2.6-12 x 2 pcs	22
TW 5-2- 5B	50	15	50	42.8	7	31.9	M2.6-12 x 4 pcs	18
TW 5-2- 7B	50	15	70	43.2	7	52.9	M2.6-12 x 4 pcs	22
TW 5-3- 5B	50	25	50	42.8	17	31.9	M2.6-12 x 4 pcs	22
TW 5-3- 7B	50	27.5	70	43.2	19.5	52.9	M2.6-12 x 4 pcs	29
TW 5-3- 9B	45	25	90	37.7	16	69.4	M3-12 x 4 pcs	30.5
TW 5-3-10B	50	30	100	42.4	20.8	80.8	M2.6-12 x 4 pcs	41.5
TW 5-4- 7B	50	40	70	42.5	32	52.9	M2.6-12 x 4 pcs	35
TW 7-2-11B	70	20	105	61.2	10.5	83	M2.6-14 x 4 pcs	56.5
TW 7-3-13B	65	25.6	130	55.3	14.3	105	M3-16 x 4 pcs	76
TW 7-4-11B	70	35	105	61.2	25.5	83	M2.6-14 x 4 pcs	70
TW 7-5-11B	70	50	105	61.1	40.5	83	M2.6-14 x 4 pcs	83
TW 7-5-13B	65	50.1	130	55.3	38.8	105	M3-16 x 4 pcs	100
TW 8-2- 8B	80	20	80	71.6	10.5	59	M2.6-12 x 4 pcs	49
TW 8-4- 8B	80	40	80	71.6	30.5	59	M2.6-12 x 4 pcs	65
TW 9-4-17B	85.5	35.5	170	75.7	24	143	M3-16 x 4 pcs	133
TW 9-6-17B	85.5	60.5	170	75.7	49	143	M3-16 x 4 pcs	168
TW11-5-22B	110	45.3	220	100.1	33.8	191	M3-16 x 4 pcs	223
TW11-8-22B	110	75.3	220	99.3	63.8	191	M3-16 x 4 pcs	277
TW13-3-13B	125	25	125	114.5	13.7	100	M3-16 x 4 pcs	135
TW13-3-18B	125	25	175	114.5	13.7	148	M3-16 x 4 pcs	184.5
TW13-5-13B	125	45	125	114.5	33.7	100	M3-16 x 4 pcs	165.5
TW13-5-18B	125	45	175	114.5	33.7	148	M3-16 x 4 pcs	218
TW13-7-18B	125	65	175	114.2	53.7	148	M3-16 x 4 pcs	254

TWN series (ABS UL94V-0)

Product no. / Dimensions

Product no.	External dimensions			Internal dimensions			Screw (Self-tapping flat head)	Weight (g)
	W	H	D	w	h	d		
TWN 4-2- 5W	35	20	50	28.2	12	32.6	M2.6-12 x 2 pcs	16.5
TWN 4-2- 6W	35	20	60	28.2	12	42.6	M2.6-12 x 2 pcs	18
TWN 4-2- 8W	40.3	20	80.3	33.5	12	62.5	M2.6-12 x 2 pcs	26
NEW TWN 5-2- 5W	50	15	50	42.8	7	31.9	M2.6-12 x 4 pcs	20
TWN 5-2- 7W	50	15	70	43.2	7	52.9	M2.6-12 x 4 pcs	24.5
NEW TWN 5-3- 5W	50	25	50	42.8	17	31.9	M2.6-12 x 4 pcs	26
TWN 5-3- 7W	50	27.5	70	43.2	19.5	52.9	M2.6-12 x 4 pcs	33
TWN 5-3- 9W	45	25	90	37.7	16	69.4	M3-16 x 4 pcs	35
NEW TWN 5-3-10W	50	30	100	42.4	20.8	80.8	M2.6-12 x 4 pcs	46.5
TWN 5-4- 7W	50	40	70	42.5	32	52.9	M2.6-12 x 4 pcs	39.5
TWN 7-2-11W	70	20	105	61.2	10.5	83	M2.6-14 x 4 pcs	64.5
TWN 7-3-13W	65	25.6	130	55.3	14.3	105	M3-16 x 4 pcs	85
TWN 7-4-11W	70	35	105	61.2	25.5	83	M2.6-14 x 4 pcs	80
TWN 7-5-11W	70	50	105	61.1	40.5	83	M2.6-14 x 4 pcs	94.5
TWN 7-5-13W	65	50.1	130	55.3	38.8	105	M3-16 x 4 pcs	115.5
TWN 8-2- 8W	80	20	80	71.6	10.5	59	M2.6-12 x 4 pcs	55.5
TWN 8-4- 8W	80	40	80	71.6	30.5	59	M2.6-12 x 4 pcs	75
TWN 9-4-17W	85.5	35.5	170	75.7	24	143	M3-16 x 4 pcs	151
TWN 9-6-17W	85.5	60.5	170	75.7	49	143	M3-16 x 4 pcs	191
TWN11-5-22W	110	45.3	220	100.1	33.8	191	M3-16 x 4 pcs	254
TWN11-8-22W	110	75.3	220	99.3	63.8	191	M3-16 x 4 pcs	316
TWN13-3-13W	125	25	125	114.5	13.7	100	M3-16 x 4 pcs	156.5
TWN13-3-18W	125	25	175	114.5	13.7	148	M3-16 x 4 pcs	206.5
TWN13-5-13W	125	45	125	114.5	33.7	100	M3-16 x 4 pcs	190
TWN13-5-18W	125	45	175	114.5	33.7	148	M3-16 x 4 pcs	249
TWN13-7-18W	125	65	175	114.2	53.7	148	M3-16 x 4 pcs	290.5

TWSC series SILICONE PROTECTOR for TW•TWN

Color Type

Code	Y Yellow	N Navy	L Light gray	B Black
Color				

- Silicone Protector for TW and TWN series. Selectable in 4 colors.
- Available as a set of 2 pcs.
- Custom color is available from just 1 set. For 500 sets or more, manufacture costs will be similar to a standard color. Please inquire for more details. For custom color order, please specify **PANTONE**® color code.
- Use caution when assembling. Overtightening may damage the enclosure and silicone protectors.

TWSC dimensions

- DXF/DWG/PDF drawings available on our website.

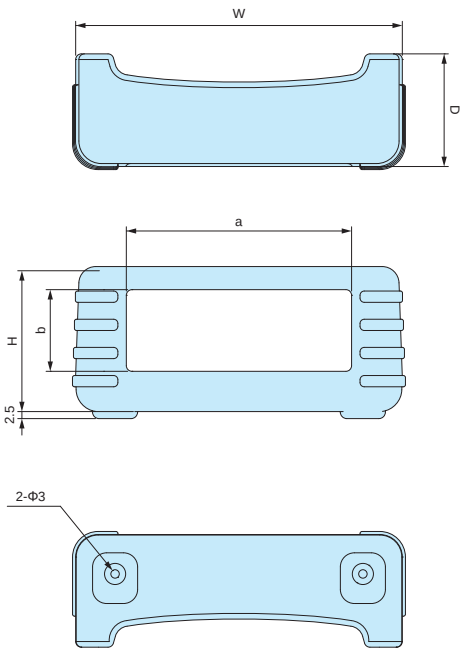

APPLICATION EXAMPLE

Wi-Probe DIRECT2 Monitoring Device

Product by TAKASAKI KYODO COMPUTING CENTER (Japan)

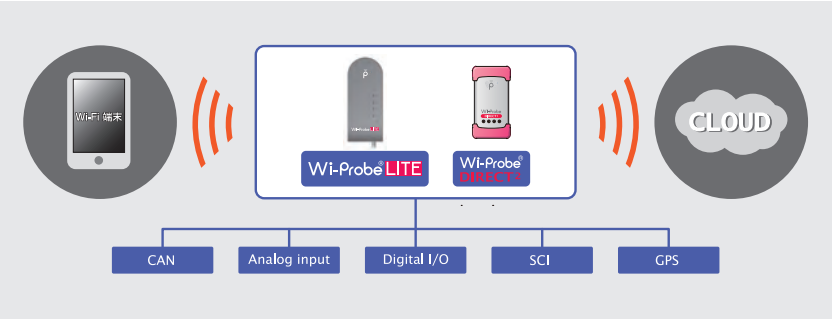

*Pink shown above is custom color.

Components

Part name	Pcs	Material	Color / Finish
Silicone protector	1 set (2 pcs)	Silicone	Yellow • Navy • Light gray • Black
Self-tapping screw	4	Steel M3-20	Black trivalent chromate

Product no. / Dimensions

- Please suffix color code at the end of the product number.

Product no.	W	H	D	a	b	Suitable models	Weight (g)
TWSC 7-3□	71	32	27	52	13.5	TW • TWN 7-3-13	41
TWSC 7-5□	71	56	27	52	37.5	TW • TWN 7-5-13	47.5
TWSC 9-4□	91.5	41.5	33	67	22	TW • TWN 9-4-17	60
TWSC 9-6□	91.5	66.5	33	67	46.5	TW • TWN 9-6-17	75
TWSC11-5□	116	51.5	40	80	29	TW • TWN11-5-22	102.5
TWSC11-8□	116	81.5	40	80	58	TW • TWN11-8-22	122
TWSC13-5□	131	51	38	101	29.5	TW • TWN13-5-13 TW • TWN13-5-18	104
TWSC13-7□	131	71	38	101	48.5	TW • TWN13-7-18	117

SIB series SILICONE BAND

Utilization example

- Silicone band designed to fit TW and TWN series.
  Refer to the table below for size suitability.
- Silicone band provides both shock resistance and non-slip grips for the TW & TWN enclosure.

Color Type

Code	R Red	O Orange	Y Yellow	G Green	C Cyan	N Navy	L Light gray	B Black
Color								

SIB dimensions

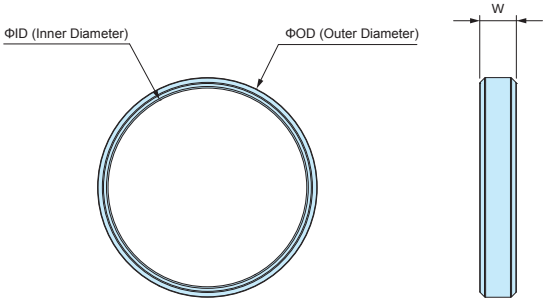

Components

Part name	Pcs	Material	Color
Silicone band	Pair (2 pcs)	Silicone	Red • Orange • Yellow • Green • Cyan • Navy • Light gray • Black

Product no. / Dimensions

- Please suffix color code at the end of the product number.

Product no.	W	ID	OD	Suitable models	Weight (g)
SIB-21□	6	21	25	TW • TWN4-2-5 • 4-2-6 • 4-2-8 • 5-2-5 • 5-2-7 • 5-3-9	2
SIB-38□	7	38	42	TW • TWN5-3-5 • 5-3-7 • 5-4-7 • 5-3-10 • 7-2-11 • 7-4-11 7-3-13 • 8-2-8	4
SIB-58□	8	58	63	TW • TWN7-5-11 • 7-5-13 • 8-4-8 • 9-4-17	10
SIB-72□	10	72	77	TW • TWN9 -6-17 • 11-5-22 • 11-8-22 • 13-3-13 • 13-5-13 13-3-18 • 13-5-18 • 13-7-18	14

WPMB-M4-3 series POLE MOUNTING BRACKET

- Pole mount bracket made from weather resistant ASA material.
- Suitable for both vertical and horizontal mounting.
- IPX7 protection can be maintained through the use of sealing washers.
- Hole milling is required for bracket installation.
- Pole mount is possible with the use of PKB series mounting belt. (see page 324 for PKB series)

WPMB-M4-3 dimensions

- DXF/DWG/PDF/STP drawings available on our website.

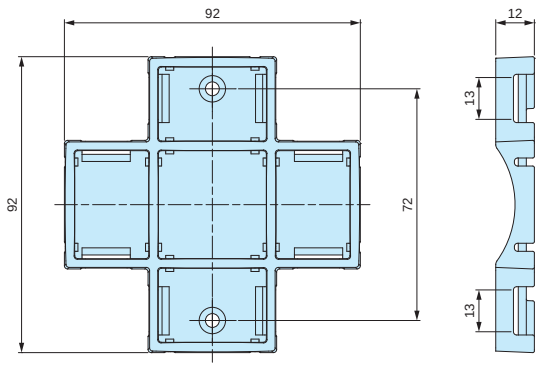

Installation

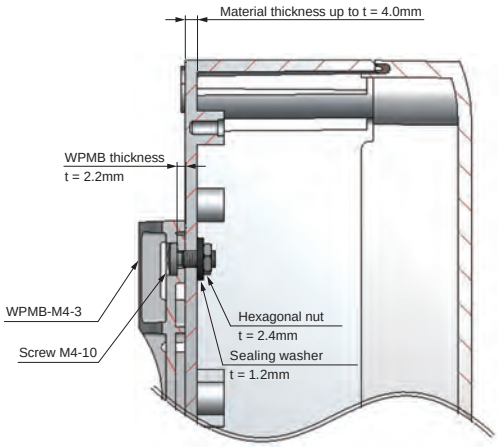

Components

No.	Part name	Pcs	Material	Color / Finish
1	Bracket	1	ASA UL94HB	White gray • Dark gray
2	Sealing washer	2	NBR, SPCC	Black
3	Screw (M4-10 Pan head)	2	Stainless steel	Unfinished
4	Hexagonal nut (M4 - JIS Type 3)	2	Stainless steel	Unfinished

Product no. / Dimensions

Product no.		Material thickness to install	Recommended torque	Max load (kg)	Weight (g)
White gray	Dark gray				
WPMB-M4-3G	WPMB-M4-3D	Up to t = 4.0mm	0.45N • m	5	26.5

- Recommended torque listed is for reference only; actual may differ. Assemble after testing torque.

WM series SUSPENSION BRACKET

How to install

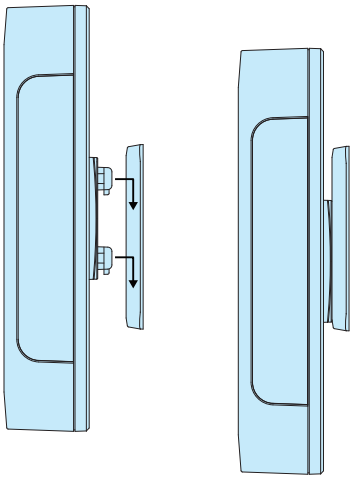

- Plastic wall mounting bracket. Easy attachment and removal.
- Large and small bracket types are available.
- Applicable to be used on plastic or metallic enclosures with a panel thickness of 0.8 ~ 3.5mm.
- To attach the suspension hook onto the enclosure, hole milling is required.
- Please be aware of the insertion direction of the suspension hook against the mounting base when attaching.

Technical Data
Max load : 2 kg - WM-1 5 kg - WM-2

*The max load values listed are static load values only. Use caution when handling.

WM dimensions

WM-1

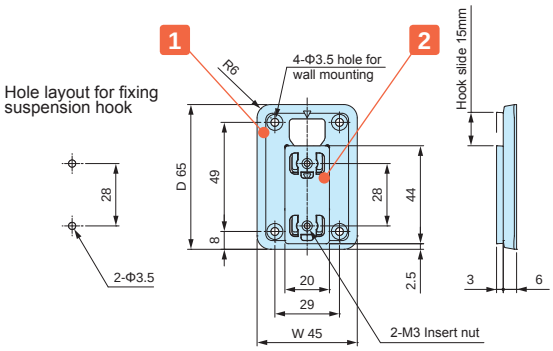

WM-2

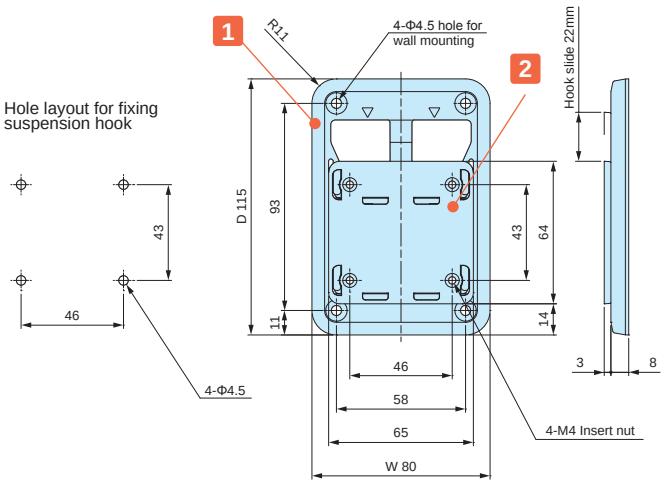

- DXF/DWG/PDF/STP drawings available on our website.

Components

No.	Part name	Pcs	Material	Color / Finish
1	Mounting base	1	PC + ABS UL94HB	Off-white • Dark gray
2	Suspension hook	1	PC + ABS UL94HB	Off-white • Dark gray
–	Screw	2 (WM-1) 4 (WM-2)	Steel	Nickel plated

Included Screw WM-1□ : Bind M3-8
WM-2□ : Bind M4-8

Product no. / Dimensions

Product no.		W	D	Mountable thickness	Weight (g)
● Off-white	● Dark gray				
WM-1W	WM-1D	45	65	t0.8 ~ t3.5	11.5
WM-2W	WM-2D	80	115	t0.8 ~ t3.5	48

NMG series NEODYMIUM MAGNET

Round magnet

■ DXF/DWG/PDF drawings available on our website.

■ Material / Finish: Neodymium / Nickel plated

■ Please attach using a strong adhesive.

NMG dimensions

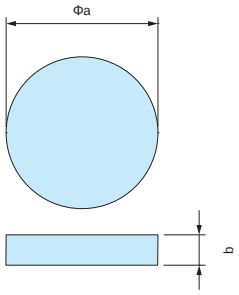

Components

Product no.	a	b	Weight (g)	Flux Density	Absorption
NMG3-15N	15	3	4	214.4 mT	2.44 kgf
NMG3-20N	20	3	7.1	170.7 mT	3.26 kgf
NMG5-22N	22	5	11.4	247.2 mT	5.91 kgf
NMG5-25N	25	5	18.4	221.9 mT	6.89 kgf

Round magnet with countersunk hole

■ Please fasten with a screw.

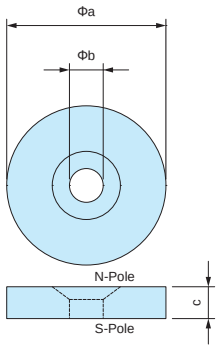

Components

Product no.	a	b	c	Countersunk size	Weight (g)	Flux Density	Absorption
NMG3-15M3	15	3.2	3	M3	3.8	214.3 mT	2.33 kgf
NMG3-20M3	20	3.2	3	M3	6.9	170.6 mT	3.17 kgf
NMG5-22M4	22	4.3	5	M4	13.7	247.2 mT	5.68 kgf
NMG5-25M5	25	5.3	5	M5	17.6	221.9 mT	6.58 kgf

Rectangular magnet with countersunk holes

■ Please fasten with a screw.

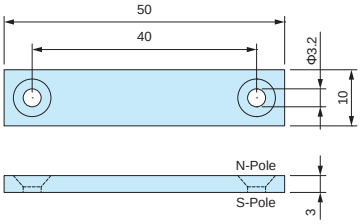

Components

Product no.	a	b	c	Countersunk size	Weight (g)	Flux Density	Absorption
NMG3-50M3	50	10	3	M3	11.3	210.0 mT	9.1 kgf

Example 1 The magnetic force remains strong even through plastic.

Make recessed pocket on the inside wall.

Glue on.

Attach onto a metallic surface.

Example 2

Make holes

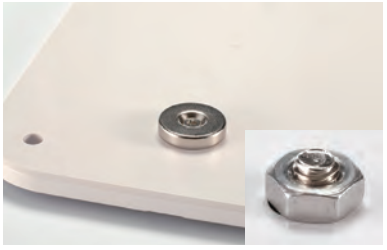

Fasten with a screw and nut.

Attach onto a metallic surface.

CAUTION: Handle with care to avoid personal injury or damage to the magnet.

GDH series PLASTIC BELT CLIP

GDH dimensions

■ DXF/DWG/PDF drawings available on our website.

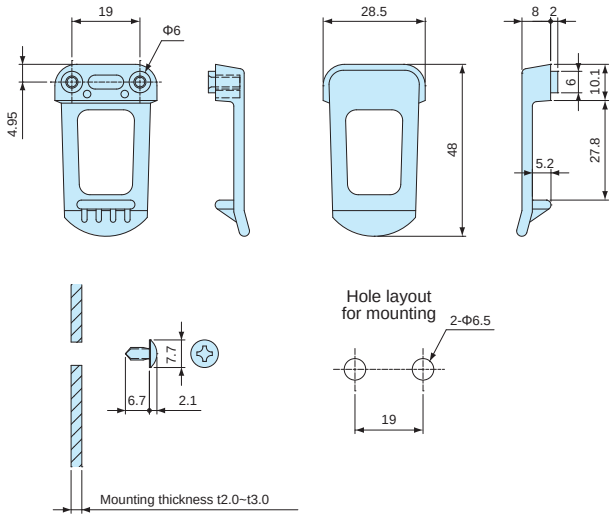

Components

No.	Part name	Pcs	Material	Color / Finish
1	Clip	1	ABS UL94HB	White • Black
2	Screw	2	Steel M3.5-6	Zinc plated

Product no. / Dimensions

Product no.		W	H	D
● White	● Black			
GDH-1W	GDH-1B	28.5	10	48

DK series STEEL BELT CLIP

DK dimensions

■ DXF/DWG/PDF drawings available on our website.

DK-1

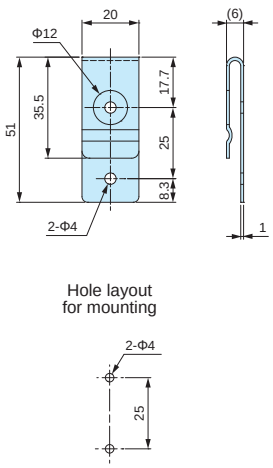

DK-2

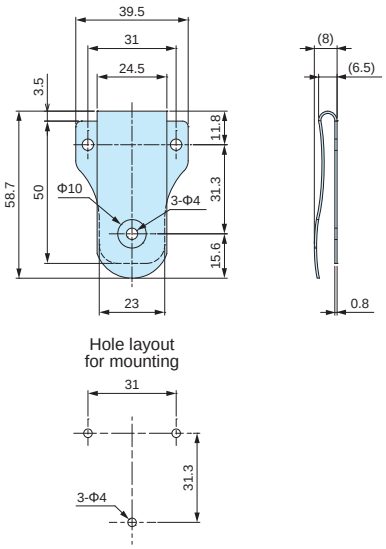

Product no. / Dimensions

Product no.	Material	Finish
DK-1	Steel SPCC t=1.0	Chrome plated
DK-2	Steel SPCC t=0.8	Chrome plated

TI SERIES TILT STAND

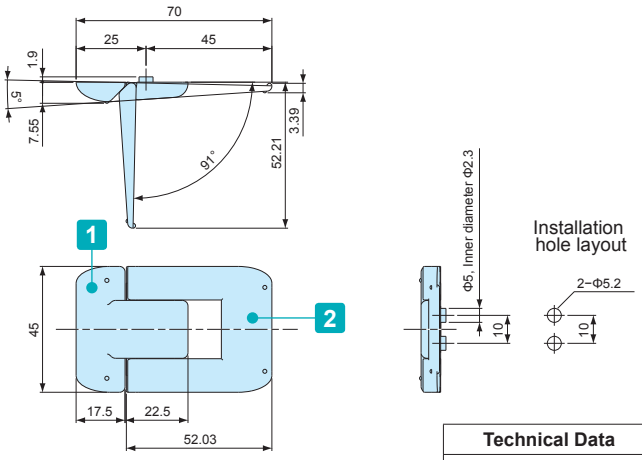

Technical Data
Max load : 3kg

Installation Example

Components

No.	Part name	Pcs	Material	Color / Finish
1	Body	1	ABS UL94HB	Black • Light gray
2	Leg	1	ABS UL94HB	Black • Light gray
–	Screw (M3-6 Pan head tapping)	2	Steel	Trivalent chromate

Product no.

Product no.	
● Black	● Light Gray
TI-70B	TI-70S

DRA series DIN-RAIL MOUNTING BASE

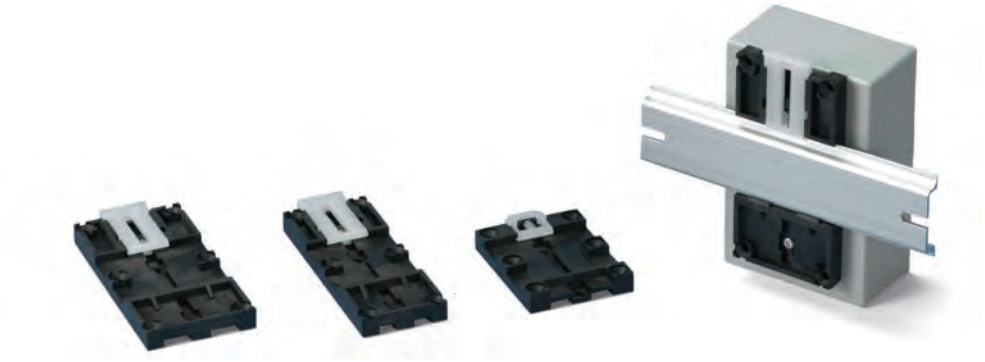

■ For installation of enclosures, PCB and other parts onto a DIN rail.
■ Simple installation and removal via the pull lever.

■ **NOTE**

Before installation, please ensure that the lever is not fully hidden behind the enclosure

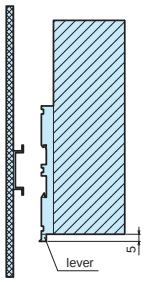

Technical Data
Max load : 5kg

DRA dimensions

DRA-1

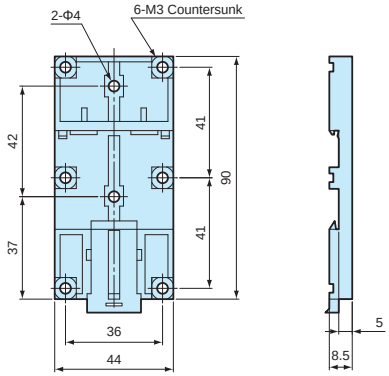

DRA-2

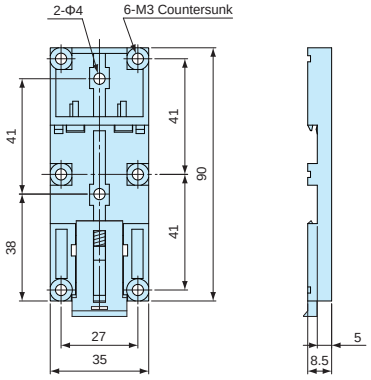

DRA-3

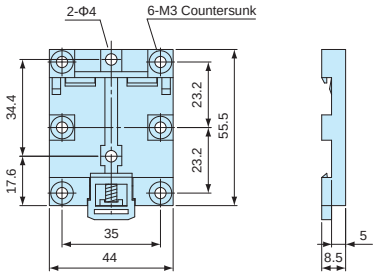

■ DXF/DWG/PDF drawings available on our website.

Product no. / Dimensions

Product no.	Material (body)	Material (lever)	Color	Weight (g)
DRA-1	PPE : SB UL94V-1	Nylon 66 UL94V-2	Black : White	16.4
DRA-2	PPE : SB UL94V-1	Nylon 66 UL94V-2	Black : White	14.5
DRA-3	PPE : SB UL94V-1	Nylon 66 UL94V-2	Black : White	10.4

DRT series DIN-RAIL MOUNTING BASE

DRT dimensions

■ DXF/DWG/PDF drawings available on our website.

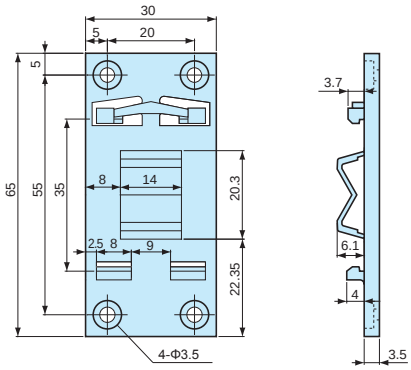

■ **NOTE**

Before installation, please ensure that the length (from top) of the enclosure is equal to, or less than 100mm from the center of the mounting base.

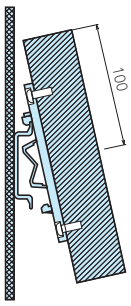

■ For installation of enclosures, PCB and other parts onto a DIN rail.
■ Simple installation and removal by tilting the case at an angle and sliding it in/out.

Technical Data
Max load : 1kg Operating temperature: -20°C ~ +70°C

Product no. / Dimensions

Product no.	Material	Color	Weight (g)
DRT-1	PC/ABS UL94V-0	Light gray	7.3

ULCK series SCREWLESS PCB ADHESIVE STANDOFF

NEW

Product photo

Application example

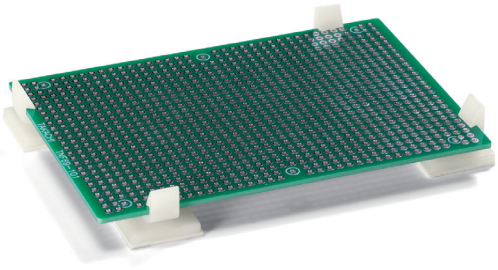

ULCK dimensions

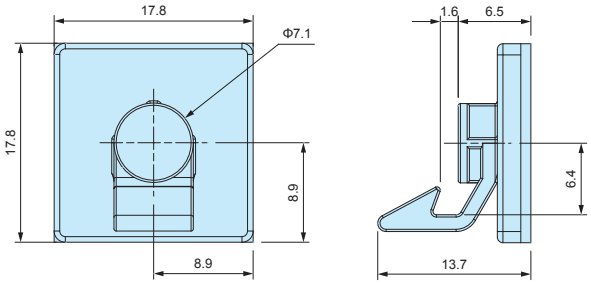

■ DXF/DWG/PDF drawings available on our website.

- Securing of a 1.6mm thick PCB made easy by simply snapping it in.
- Adhesive standoff can be freely and easily affixed on.
- Once removed, it cannot be adhered on again.

Product no. ■ Material / Finish : PA66 UL94V-2 / Natural

Product no.	Pack of
ULCK-6.4	4

CUBE series CUBE STANDOFF

NEW

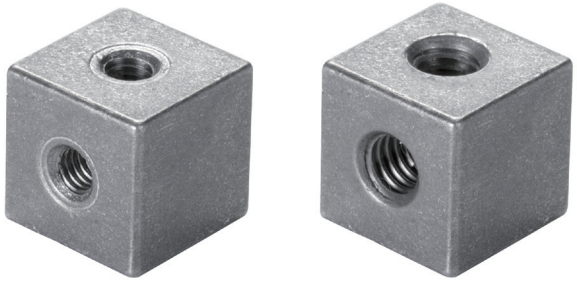

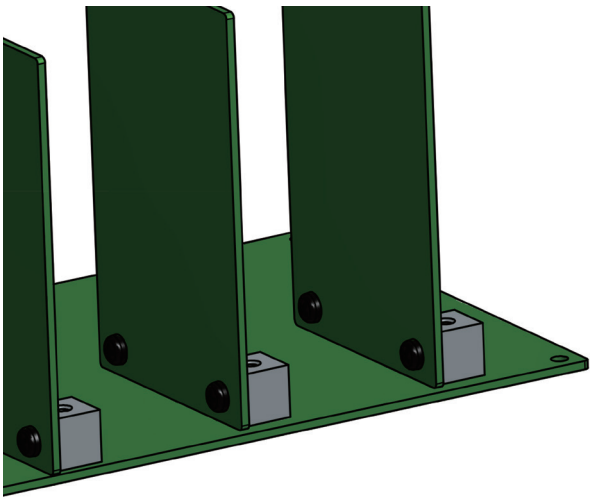

CUBE dimensions

CUBE10-M3

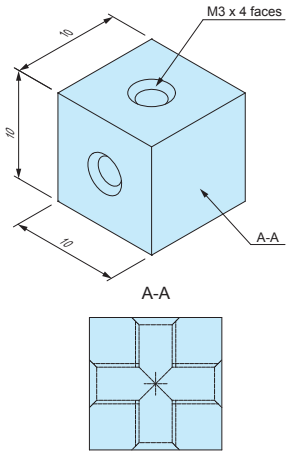

CUBE10-M4

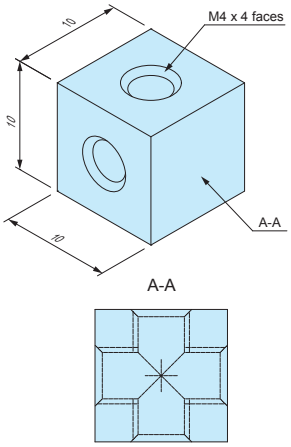

■ DXF/DWG/PDF/STP drawings available on our website.

- 10mm threaded cube shape standoff with a thread on 4 faces.
- M3 and M4 thread models available.
- Coveniently usable when installing PCB or metal plate upright.
- CUBE can also be used to make a simple housing by vertically aligning the plates.

Product no. ■ Zinc diecast : Glossy barrel finish

Product no.	Pack of
CUBE10-M3	2
CUBE10-M4	2
CUBE10-M3-P	20
CUBE10-M4-P	20

Production example : Aluminium case

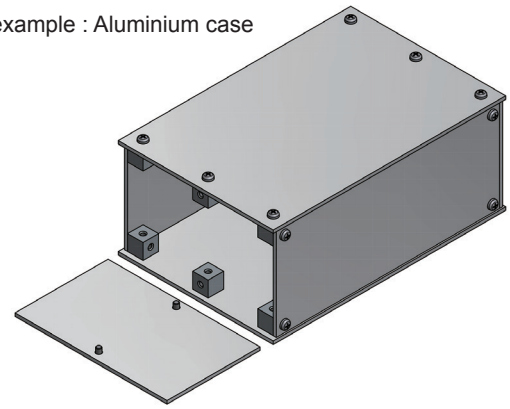

Production example : Acrylic case

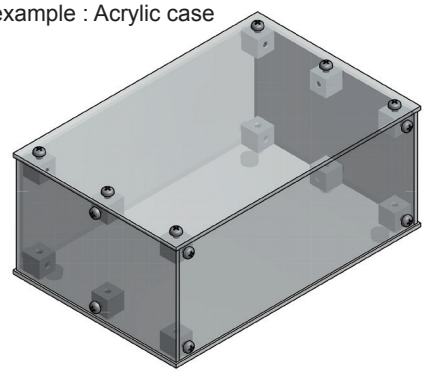

AST series INSERT NUT ADHESIVE STANDOFF

NEW

- Double-sided adhesive tape allows the standoff to be mounted quickly and easily; allows PCB mounting in non-boss enclosures.
- Convenient for installing PCBs into enclosures without the need for customization.
- Please ensure that surface is cleaned and grease-free before adhering.
- Once removed, it cannot be adhered on again.

AST dimensions

- DXF/DWG/PDF/STP drawings available on our website.

AST2.5-□

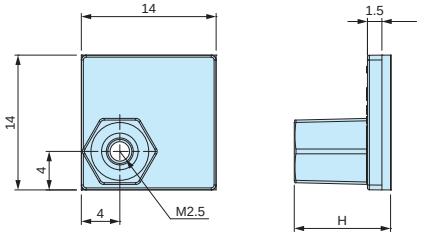

AST3-□

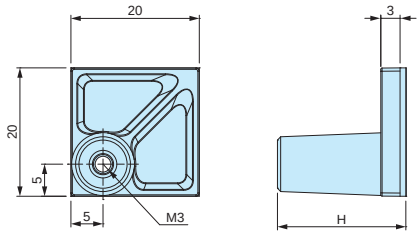

AST4-□

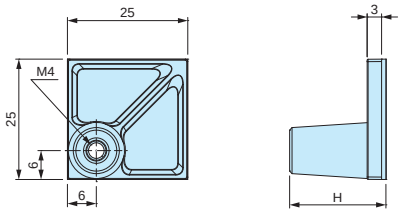

Product no. / Dimensions

Product no	H dimension	Included screw	Recommended PCB Thickness (mm)	Recommended torque (N • m)	Weight (g)	Pack of
AST2.5-5B	5	M2.5-5 pan head	1.0 ~ 2.0	0.3	0.6 (1 piece)	4
AST2.5-10B	10	M2.5-5 pan head	1.0 ~ 2.0	0.3	0.8 (1 piece)	4
AST3-6B	6	M3-6 pan head	1.0 ~ 3.0	0.4	1.5 (1 piece)	4
AST3-10B	10	M3-6 pan head	1.0 ~ 3.0	0.4	1.6 (1 piece)	4
AST3-15B	15	M3-6 pan head	1.0 ~ 3.0	0.4	1.8 (1 piece)	4
AST3-20B	20	M3-6 pan head	1.0 ~ 3.0	0.4	2.1 (1 piece)	4
AST4-10.5B	10.5	M4-8 pan head	1.0 ~ 3.5	0.8	2.6 (1 piece)	4
AST4-20B	20	M4-8 pan head	1.0 ~ 3.5	0.8	3.2 (1 piece)	4

Bulk package

Product no	Pack of
AST2.5-5B-P	100
AST2.5-10B-P	100
AST3-6B-P	100
AST3-10B-P	100
AST3-15B-P	100
AST3-20B-P	100
AST4-10.5B-P	50
AST4-20B-P	50

- Base material / color : Nylon 66 (UL94V-2) / Black
- Nut • screw material / finish : Steel / Trivalent chromate
- Bulk packaging is available. See "Bulk package" column above.
- Screws are not included for bulk packages.

ASR series ADHESIVE PCB STANDOFF

ASR dimensions

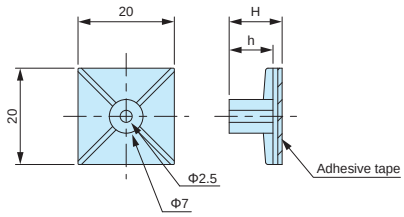

- DXF/DWG/PDF drawings available on our website.

Technical Data
Recommended torque : 0.4N • m

- M3 tapping screw use adhesive standoff. Recommended to be used with EM-3 or EM-3-6 self-tapping screws (See page 123).
- Please ensure that surface is cleaned and grease-free before adhering.
- Once removed, it cannot be adhered on again.

Product no. / Dimensions

Product no	H	h	Weight (g)	Pack of
ASR- 5	5.1	3.1	0.9 (1 piece)	10
ASR- 6	6.4	4.4	1.0 (1 piece)	10
ASR- 7	7.2	5.1	0.9 (1 piece)	10
ASR- 8	8.1	6.3	0.9 (1 piece)	10
ASR- 9	9	7	1.0 (1 piece)	10
ASR-11	11	9	1.0 (1 piece)	10
ASR-13	12.7	10.7	1.2 (1 piece)	10
ASR-14.5	14.7	12.8	1.1 (1 piece)	10
ASR-16	15.9	13.9	1.3 (1 piece)	10
ASR-19	19.1	17.1	1.4 (1 piece)	10

TPS series TAPPING STANDOFF

NEW SIZE

TPS dimensions

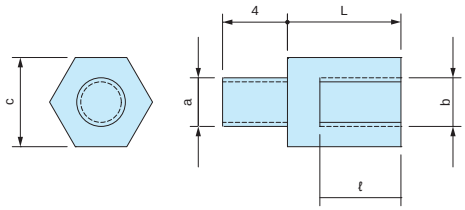

■ DXF/DWG/PDF drawings available on our website.

■ Tapping screw head allows for easy installation onto existing enclosure boss mount.

■ 4 different sizes available : M2.3, M2.6, M3 and M4 size.

Product no. / Dimensions

■ Material / Finish : Brass / Unfinished

Product no.	Screw size (a)	Screw size (b)	c	L	ℓ	Pack of	Suitable models
TPS-M2.3-4	M2.3	M2.3	5	4	3	4	WH series • PFE series LC • LCE • LCS • LCT series PF • PFF series (M2.3 boss models) TW • TWN • TWF series (M2.3 boss models) WP series (M2.3 boss models)
TPS-M2.3-5	M2.3	M2.3	5	5	3	4	
TPS-M2.3-6	M2.3	M2.3	5	6	4	4	
TPS-M2.3-7	M2.3	M2.3	5	7	5	4	
TPS-M2.3-8	M2.3	M2.3	5	8	6	4	
TPS-M2.3-10	M2.3	M2.3	5	10	6	4	
TPS-M2.3-12	M2.3	M2.3	5	12	6	4	
TPS-M2.6-4	M2.6	M2.6	5	4	3	4	PF • PFF series (M2.6 boss models) WP series (M2.6 boss models)
TPS-M2.6-5	M2.6	M2.6	5	5	3	4	
TPS-M2.6-7	M2.6	M2.6	5	7	5	4	
TPS-M2.6-10	M2.6	M2.6	5	10	6	4	
TPS-M2.6-12	M2.6	M2.6	5	12	6	4	
TPS-M3-4	M3	M3	5.5	4	3	4	TWS • TW • TWN • TWF series (M3 boss models)
TPS-M3-5	M3	M3	5.5	5	3	4	
TPS-M3-6	M3	M3	5.5	6	4	4	
TPS-M3-7	M3	M3	5.5	7	5	4	
TPS-M3-8	M3	M3	5.5	8	5	4	
TPS-M3-10	M3	M3	5.5	10	6	4	
TPS-M3-12	M3	M3	5.5	12	6	4	
NEW TPS-M4-6	M4	M4	7	6	4	4	BCAP • BCPC • BCPK • BCAR • BCPR series (M4 boss models)
NEW TPS-M4-10	M4	M4	7	10	6	4	
NEW TPS-M4-15	M4	M4	7	15	8	4	
NEW TPS-M4-20	M4	M4	7	20	10	4	

■ Please use a suitable sized socket driver to both secure and loosen the tapping standoff.

MT series PCB MOUNTING SCREWS for TPS

Pan head

■ PCB mounting Screws for TPS tapping standoffs

Product no. / Dimensions

Product no.	M	L	Head style	Material	Finish	Pack of
MT2.3-4	2.3	4	Pan	Steel	Trivalent chromate	20
MT2.3-6	2.3	6		Steel	Trivalent chromate	20
MT2.6-4	2.6	4		Steel	Trivalent chromate	20
MT3-4	3	4		Steel	Trivalent chromate	20

EM series PCB MOUNTING SCREW

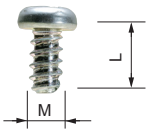

- Self-tapping screws for mounting PCB on bosses or standoffs.
- EM-3-6 self-tapping screws are suitable for mounting 1.6mm or thicker PCB.

Product no. / Dimensions

Product no.	M	L	Material	Finish	Suitable models	Pack of
EM-1.6	1.6	4	Steel	Trivalent chromate	CSS • CS WC • PS (M1.6 boss models)	50
EM-2	2	5	Steel	Trivalent chromate	SIC • SIM • WC • PS • TW • TWN • TWF PF • WC • WP (M2 boss models)	50
EM-2.3	2.3	6	Steel	Trivalent chromate	WH • LC • LCT • LCS • LCE • PFE WSC (Top cover bosses) PF • PFF (M2.3 boss models) TW • TWN • TWF (M2.3 boss models) WP (M2.3 boss models)	50
EM-2.3-8	2.3	8	Steel	Trivalent chromate	WSC (Bottom base bosses)	50
EM-2.6	2.6	6	Steel	Trivalent chromate	PF • PFF • WP (M2.6 boss models)	50
EM-3	3	5	Steel	Trivalent chromate	TWS • TW • TWN • TWF (M3 boss models)	50
EM-3-6	3	6	Steel	Trivalent chromate		50

MR series TORX SCREW

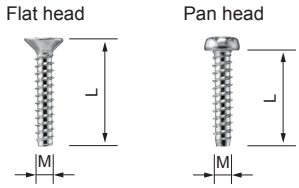

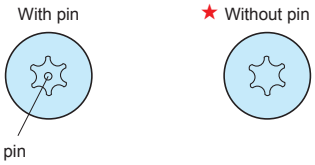

- Self-tapping torx screws for securing of the enclosure.

★ : MR1.6-6S, MR-2S, MR2.6-10□, and MR3-14□ are without pin.

Product no. / Dimensions

★Mark = Without pin

Product no.	M	L	head no.	Head style	Material	Finish	Suitable models	Pack of
MR1.6-6S★	1.6	6	T3	Pan	Steel	Nickel plated	CSS • CS	20
MR2.5-8PS	2.5	8	T8	Pan	Steel	Nickel plated	PF • PFE • PFF (M2.5 size)	20
MR2.6-10S★	2.6	10	T8	Flat	Steel	Nickel plated	TW • TWN (M2.6 size) TWF (M2.6 size) MX • MXA • MXB • MXF (M2.6 size)	20
MR2.6-10B★	2.6	10	T8	Flat	Steel	Black trivalent chromate		20
MR2.6-12PS	2.6	12	T8	Pan	Steel	Nickel plated	LCT • LCS • LC115-F2 / F3 LCT • LCS • LC145S-F6	20
MR2.6-14PS	2.6	14	T8	Pan	Steel	Nickel plated	LCT • LCS • LC115H-F2 / F3 / M2 / 9V LCT • LCS • LC135-F4 / M2 / M3 / 9V LCT • LCS • LC135H-F4 / M2 / M3 / 9V LCT • LCS • LC145-F6 / M2 / M4 LCT • LCS • LC145H-F6 / M2 / M4 LCT • LCS • LC165-M4 LCT • LCS • LC165H-M4	20
MR2.6-14S	2.6	14	T8	Flat	Steel	Nickel plated	LCT • LCS • LC115-N / F2 / F3 LCT • LCS • LC145S-F6 / 145S-N LCE115-N TW • TWN7-2-11 / 7-4-11 / 7-5-11 TWF7-2-11 / 7-4-11 / 7-5-11 / 8-2-8 / 8-4-8	20
MR2.6-18S	2.6	18	T8	Flat	Steel	Nickel plated	LCT • LCS • LC115H-N / F2 / F3 / M2 / 9V LCT • LCS • LC135-N / F4 / M2 / M3 / 9V LCT • LCS • LC135H-N / F4 / M2 / M3 / 9V LCT • LCS • LC145-N / F6 / M2 / M4 LCT • LCS • LC145H-N / F6 / M2 / M4 LCT • LCS • LC165-N / M4 LCT • LCS • LC165H-N / M4 LCE115H-N • LCE135-N • LCE145H-N • LCE165H-N	20
MR3-8PS	3	8	T10	Pan	Steel	Nickel plated	PF • PFE • PFF (M3 size)	20
MR3-14S★	3	14	T10	Flat	Steel	Nickel plated	TW • TWN (M3 size) TWF (M3 size) MX • MXA • MXB • MXF (M3 size)	20
MR3-14B★	3	14	T10	Flat	Steel	Black trivalent chromate		20
MR-1S	3	5	T10	Flat	Steel	Nickel plated	UC	20
MR-1B	3	5	T10	Flat	Steel	Black trivalent chromate		20

TAKACHI

DIGITAL PRINTED OVERLAY

3 reasons for low initial costs

Reason ①

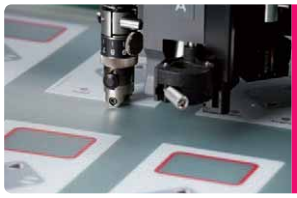

Cutting process → Avoiding the cost for cutting die manufacturing via our in-house cutting plotter.

Reason ②

Printing process → Saving the cost for print plates via utilization of our in-house digital inkjet printer.

Reason ③

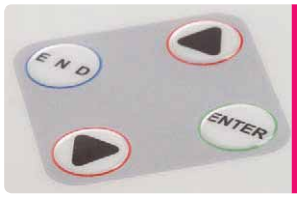

Embossing process → Reducing the cost for the embossing die via our new die manufacturing process.

Comparison of current and previous manufacturing methods

Current: Print data creation → Inkjet printing and laminating process → Cutting data creation → Cutting of double-sided tape, pasting, cutting of individual piece

Previous: Print plate creation → Printing and laminating process → Cutting die manufacture → Punching of double-sided tape, pasting, punching of individual piece

Cost・Production time

PRODUCTION PROCESS

1. Inkjet printing on film

2. Laminating

3. Cutting double-sided tape

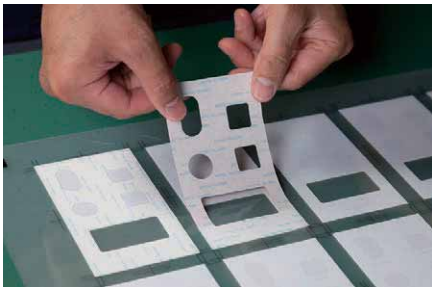

4. Sticking double-sided tape on printed film

5. Cutting the sheet to size

6. Embossing

7. Machining on enclosure

8. Sticking overlay sheet onto enclosure

9. Complete

CUSTOMIZATION EXAMPLE

INKJET PRINTING

Full color digitally designed image can be printed in 1 run.
No cost difference regardless of the number of colors used.

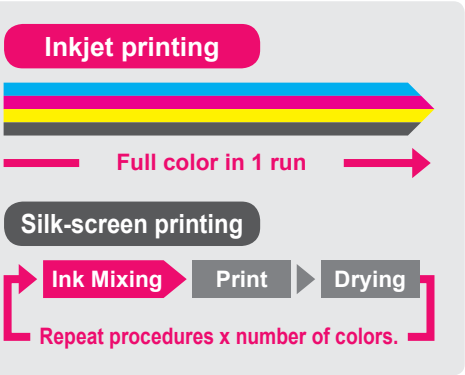

Low printing cost

Full color print possible in small quantities

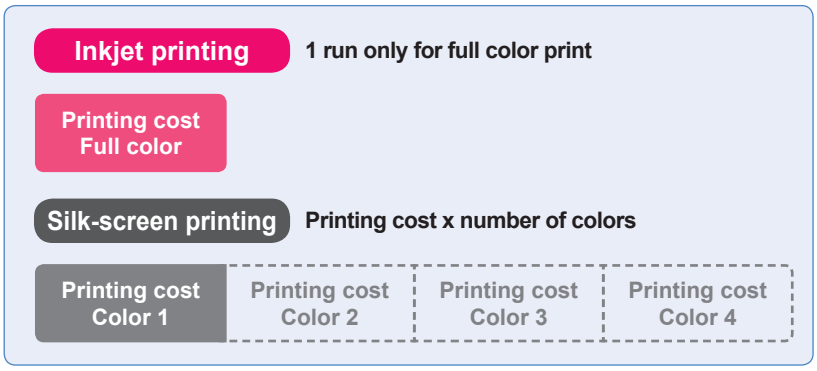

High quality printing of photo image and color gradation.

Print photo images in maximum 1,800 x 1,800 dpi quality.
Pictures, logos and unique designs with color gradation can be recreated in a high quality print.

Maximum printable enclosure size

D 420mm × W 594mm × H 270mm

Printable on surfaces with height differential

Printing is possible on recessed, sloped and rounded sections.

Gap difference is less than 2.0mm.

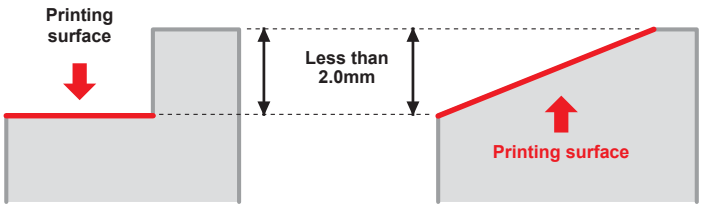

*Not suitable if height difference is more than 2.0mm.

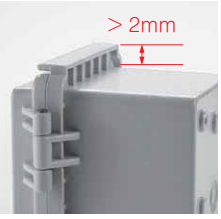

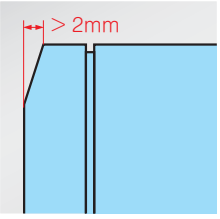

Printed example

CNC MACHINING

CNC milling is a form of computer controlled machining. Similar in operation to drilling and cutting, it is able to create various hole styles and shapes by using a rotating cutting tool to bore into the object.

Extruded aluminium

- Mainly used for plastic, aluminium die-cast, and aluminium extrusion material types.
- Able to perform milling for various shapes and sizes.
- Recommended for small quantity customization.

Aluminium sheet

Diecast aluminium

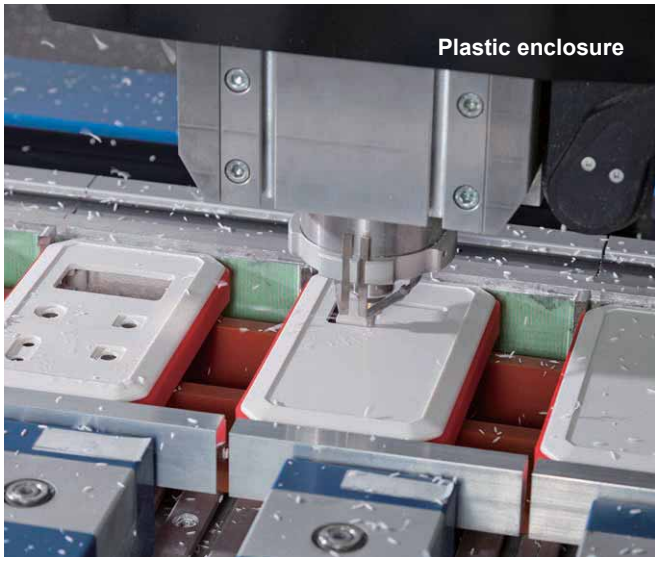
Plastic enclosure

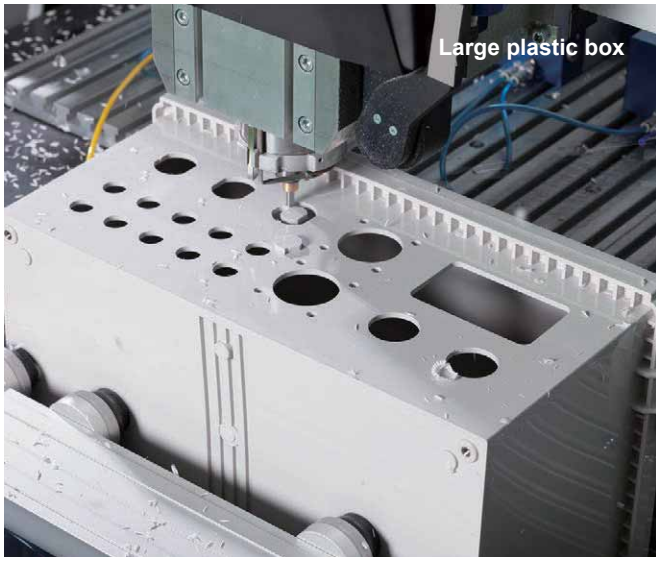
Large plastic box