PROTECTION CLASS (IP RATING)

IP67 is

●IEC60529 standard is a system for classifying the degrees of protection provided by the enclosures of electrical equipment, such as against dust and water.

IP □ □

First digit : Solid particle protection

No.	Protection against ingress of solid foreign objects	Protection against access to hazardous parts
0	No Protection	No Protection
1	Ø50mm Protected against solid objects over 50mm.	50 Protected against accidental touch by a large surface of the body, such as by hands. (Tested with a 50mm diameter steel ball.)
2	Ø12.5mm Protected against solid objects over 12.5mm.	12 Protected against accidental touch by fingers or similar objects (Tested with a 12mm diameter, 80mm long articulated finger)
3	Ø2.5mm Protected against solid objects over 2.5mm.	2.5 Protected against accidental touch by tools or thick wires. (Tested with a 2.5mm diameter, 100mm long bar)
4	Ø1mm Protected against solid objects over 1.0mm.	1.0 Protected against accidental touch by most wires and screws. (Tested with a 1.0mm diameter, 100mm long wire)
5	Protected against dust; limited ingress, no harmful deposits.	
6	Complete protection against dust.	

69K	90° 60° 30° 0°	80 to 100 barrel steam jets at 80℃ (±5℃) from a 0°, 30°, 60°, and 90° angle, at a distance of 100 ~ 150mm for 30 sec x 5 sets

Second digit: Liquid ingress protection

No.	Protection against ingress of liquid
0	No Protection
1	Dripping water (vertically falling drops) for 10 minutes.
2	15° Vertically dripping water when tilted at 15° for 10 minutes (2.5 minutes per position).
3	60° 60° Spraying water (at any angle) of 0.07ℓ/min up to 60° from the vertical for 10 minutes.
4	Spraying water of 0.07ℓ/min from all directions for 10 minutes.
5	Jets of water projected by a φ6.3 nozzle of 12.5ℓ / min from all directions at 1 min / 1㎡ for at least 3 minutes.
6	Powerful jets of water projected by a φ12.3 nozzle of 100ℓ / min from all directions at 1 min / 1㎡ for at least 3 minutes.
7	1M Immersion, up to 1 meter depth (for 30 mins).
8	Immersion (test depth and duration beyond IPX7 requirements)

A point of note for Waterproof Boxes

- ●For outdoor use, direct sunlight will accelerate the degradation of the box. For more information, please see page Outdoor Use - 1.
- ●For customers planning to attach their own original mounting brackets onto the waterproof boxes, it is recommended to mill larger holes with enough clearance to attach the bracket. If the milled hole and clearance is too small, it may cause irreparable damage to the box.
- ●Waterproof boxes made of Polycarbonate or ABS plastic material may be damaged if certain types of washing chemicals, solvents, oils, or thread locking adhesives are present on the box. Furthermore, paint not suitable to be used on plastic materials may also cause damage.

BDN series IP67 DIECAST ALUMINIUM BOX

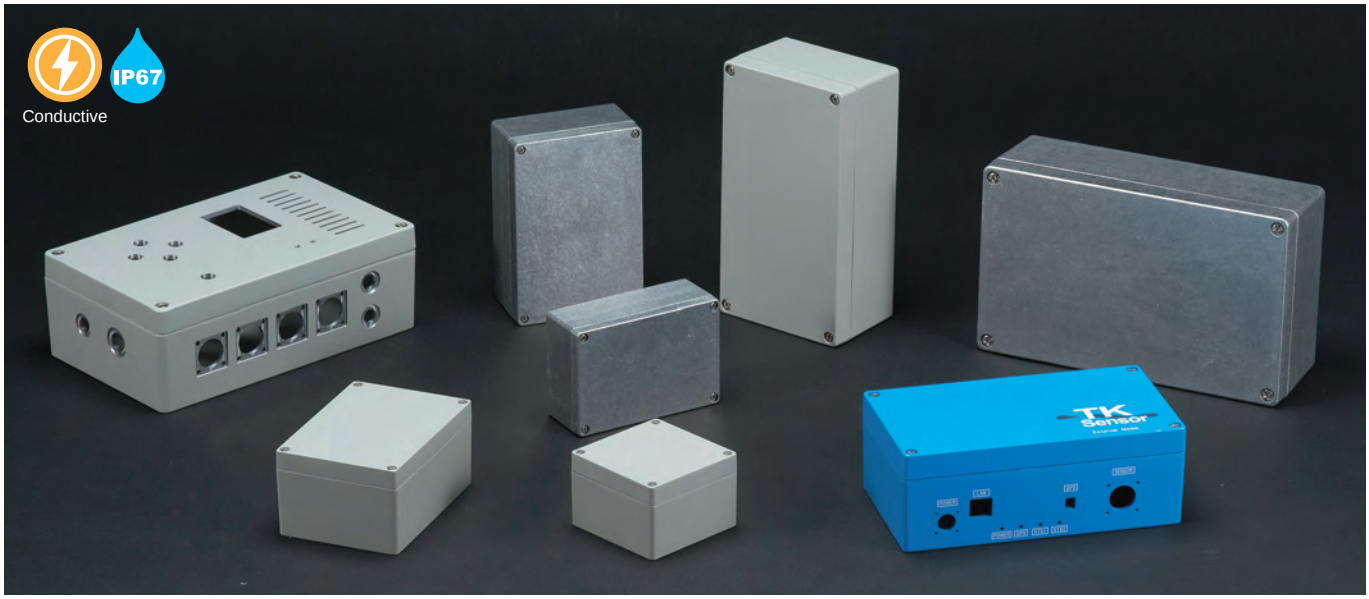

Technical Data

Protection class: IP67
Operating temperature: -40°C ~ +105°C
Recommended torque: 1.0N • m (10kgf • cm)

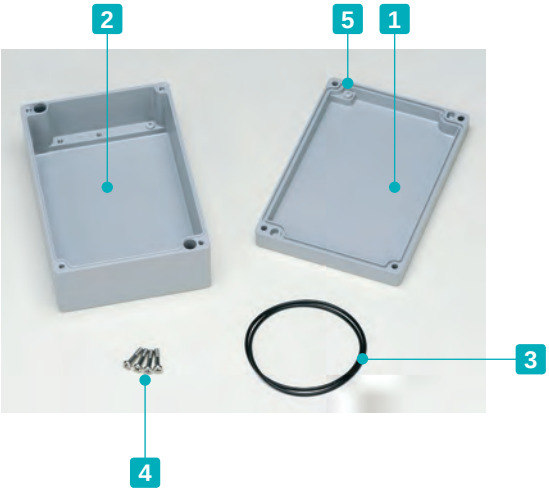

- 8 different sizes available for both light gray powder coated and unfinished models.
- O-ring gasket is good for maintaining both waterproof and dustproof functionality.
- Shock resistant diecast aluminium box.
- Conductivity can be achieved by utilization of the contact between the unfinished inner surfaces (only applicable to "N" type).

Components

No.	Part name	Pcs	Material	Color / Finish
1	Top cover	1	Diecast aluminium ADC12	Light gray / Powder coated • Natural / Unfinished
2	Base	1	Diecast aluminium ADC12	Light gray / Powder coated • Natural / Unfinished
3	O-ring gasket	1	Silicone	Black
4	Screw	4	Stainless steel	Unfinished
5	Earthing screw	2	Steel M4-5 pan head	Nickel plated

Accessories (Optional parts)

Wall mounting bracket CK series
See website

Mounting plate FTB series
See website

Pole mounting bracket SSK series
See website

DIN-Rail FDR series
See website

Cable gland
See page 333 ~ 340

BDN dimensions

■ DXF/DWG/PDF drawings available on our website.

BDN 6-8-5

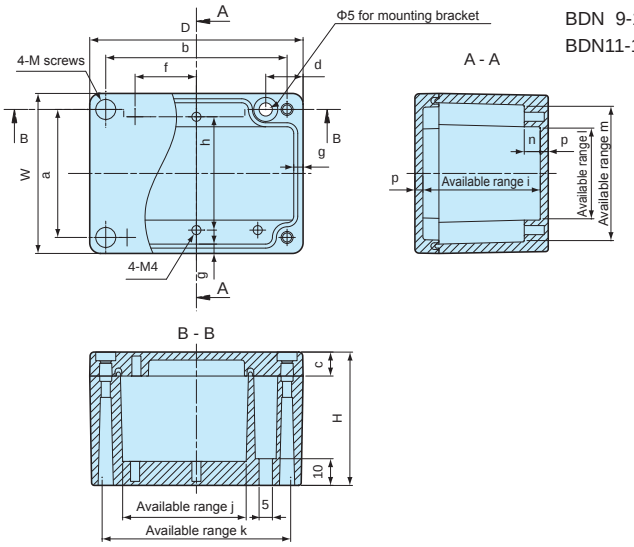

BDN 7-10-4
BDN 9-13-5
BDN11-16-6

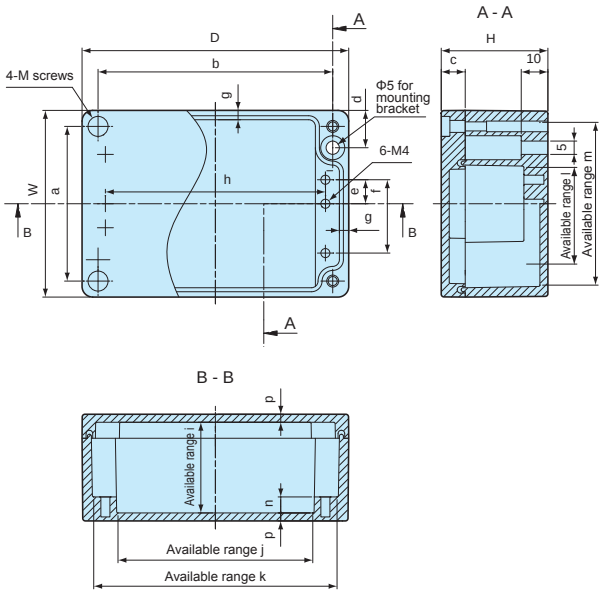

BDN 9- 9-6
BDN10-14-7
BDN12-22-8
BDN16-26-9

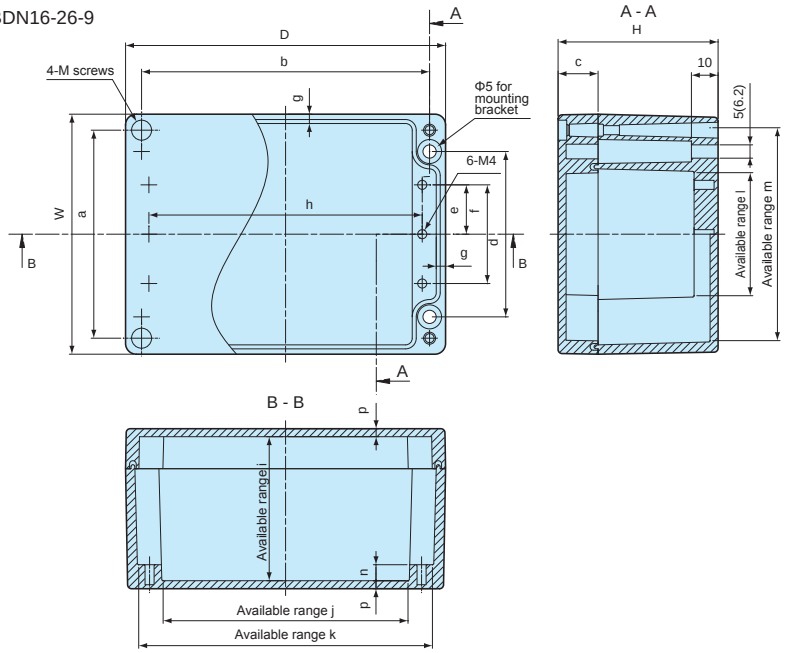

※Dimension in ( ) = BDN12-22-8
BDN16-26-9

Product no. / Dimensions

Product no.		Dimensions						Weight (g)
● Light gray	○ Natural Conductive	W	D	H	a	b	c	
BDN 6- 8-5G	BDN 6- 8-5N	60	80	50	48	68	9	240
BDN 7-10-4G	BDN 7-10-4N	70	100	40	58	88	9	250
BDN 9- 9-6G	BDN 9- 9-6N	90	90	60	78	78	15	395
BDN 9-13-5G	BDN 9-13-5N	90	130	50	78	118	9	420
BDN10-14-7G	BDN10-14-7N	100	140	70	88	128	15	635
BDN11-16-6G	BDN11-16-6N	110	160	60	98	148	15	640
BDN12-22-8G	BDN12-22-8N	120	220	80	105	205	20	1,155
BDN16-26-9G	BDN16-26-9N	160	260	90	140	240	20	2,145

Product no.		Dimensions												
● Light gray	○ Natural Conductive	d	e	f	g	h	i	j	k	ℓ	m	n	p	M
BDN 6- 8-5G	BDN 6- 8-5N	14	–	23	3.5	42.5	44	45	71	33	51	6	3	M4
BDN 7-10-4G	BDN 7-10-4N	14	11	31	3	85	34	75	92.5	38	62.5	6	3	M4
BDN 9- 9-6G	BDN 9- 9-6N	62	18.5	37	3.5	72	54	62	80	45	80	6	3	M4
BDN 9-13-5G	BDN 9-13-5N	14	19	47.5	3.5	112.5	44	104	121	56	81	6	3	M4
BDN10-14-7G	BDN10-14-7N	72	24	48	3.5	121	64	111	130	56	90	6	3	M4
BDN11-16-6G	BDN11-16-6N	14	29	67.5	3.5	142.5	54	134	151	76	101	6	3	M4
BDN12-22-8G	BDN12-22-8N	84.6	28	56	3.9	196	74	183	206	62	105	6	3	M5
BDN16-26-9G	BDN16-26-9N	110	36	72	4.8	230	82	216	247	87	146	9	4	M6

FTB SERIES

MOUNTING PLATE for BDN

FTB 5-7

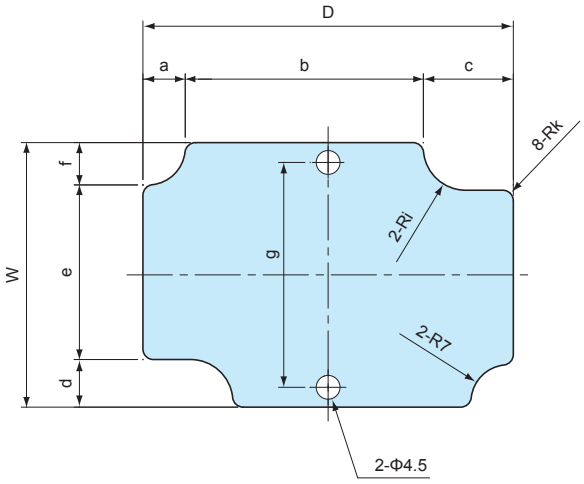

FTB 6-9

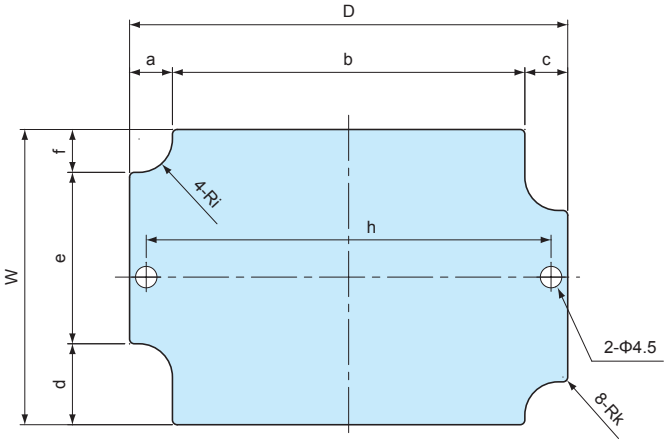

FTB 8-12
FTB10-15

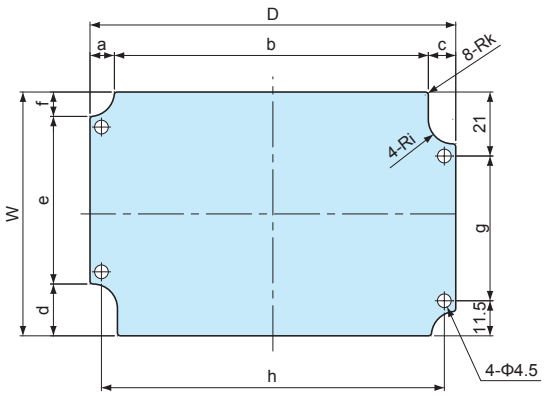

FTB 8- 8 FTB10-20
FTB 9-13 FTB14-24

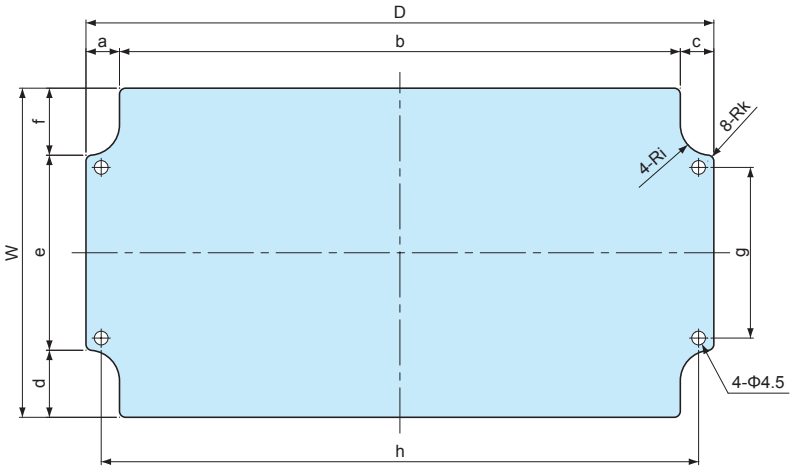

Material	Color / Finish
Aluminium A1050P t = 1.5	Silver / Anodized

Product no. / Dimensions

Product no.	Suiteble box	W	D	a	b	c	d	e	f	g	h	i	k
FTB 5- 7	BDN 6- 8-5	50	70	8	45	17	9	33	8	42.5	–	8	2
FTB 6- 9	BDN 7-10-4	62	92	9	74	9	17	36	9	–	85	7	1
FTB 8- 8	BDN 9- 9-6	80	80	9	62	9	17	46	17	37	72.5	8	2
FTB 8-12	BDN 9-13-5	80	120	8	103	9	17	55	8	47.5	112.5	8	1
FTB 9-13	BDN10-14-7	89	129	9	111	9	17	55	17	48	121	8.5	2
FTB10-15	BDN11-16-6	100	150	8	133	9	17	75	8	67.5	142.5	8	1
FTB10-20	BDN12-22-8	108	206	11	184	11	22	64	22	56	196	10	2
FTB14-24	BDN16-26-9	144	244	15	214	15	30	84	30	72	230	12	3

FDR SERIES DIN-RAIL

NEW SIZE

- DIN rail for installation of terminals, relays or switches inside enclosures.
- Available in different models and lengths to fit a wide variety of mounting boss pitch.
- FDR-1000 is available if customized length is required.

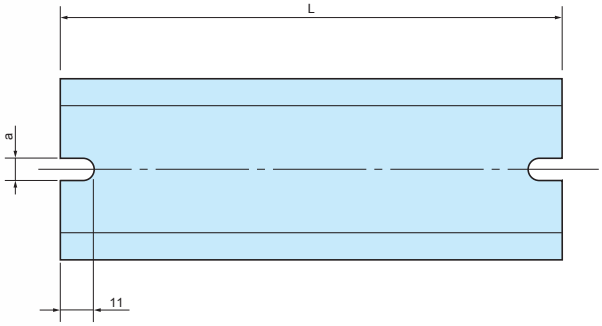

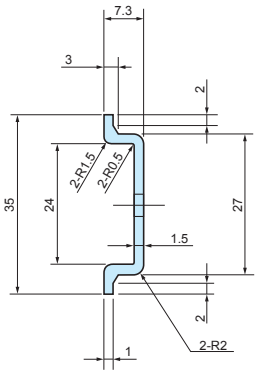

Feature

Material	Finish
Extruded Aluminium A6063S-T5	Silver anodized

Product no. / Dimensions

Product no.	L	a	Matching boss pitch
FDR- 50	50	4.2	32 ~ 42
57	57	4.2	39 ~ 49
66	66	4.2	48 ~ 58
77	77	4.2	59 ~ 69
80	80	4.2	62 ~ 72
87	87	4.2	69 ~ 79
92	92	4.2	74 ~ 84
100	100	4.2	82 ~ 92
106	106	4.2	88 ~ 98
110	110	4.2	92 ~ 102
120	120	4.2	102 ~ 112
128	128	4.2	110 ~ 120
137	137	4.2	119 ~ 129
142	142	4.2	124 ~ 134
146	146	4.2	128 ~ 138
150	150	4.2	132 ~ 142
168	168	4.2	150 ~ 160
170	170	4.2	152 ~ 162
186	186	4.2	168 ~ 178
202	202	4.2	184 ~ 194
205	205	4.2	187 ~ 197
223	223	4.2	205 ~ 215
226	226	4.2	208 ~ 218
235	235	4.2	217 ~ 227
242	242	4.2	224 ~ 234
249	249	4.2	231 ~ 241
283	283	4.2	265 ~ 275
300	300	4.2	282 ~ 292
350	350	4.2	332 ~ 342
450	450	4.2	432 ~ 442
550	550	4.2	532 ~ 542

Product no.	L	a	Matching boss pitch
FDR-B102	102	6.5	86 ~ 92
NEW B124	124	6.5	108 ~ 114
B142	142	6.5	126 ~ 132
B160	160	6.5	144 ~ 150
B165	165	6.5	149 ~ 155
B176	176	6.5	160 ~ 166
B183	183	6.5	167 ~ 173
B223	223	6.5	207 ~ 213
B260	260	6.5	244 ~ 250
B283	283	6.5	267 ~ 273
B303	303	6.5	287 ~ 293
B338	338	6.5	322 ~ 328
B360	360	6.5	344 ~ 350
B376	376	6.5	360 ~ 366
B383	383	6.5	367 ~ 373
B463	463	6.5	447 ~ 453
B560	560	6.5	544 ~ 550
B623	623	6.5	607 ~ 613
FDR-1000	1000	–	–

- FDR-1000 does not have mounting holes.

Matching DIN-Rail Chart

BC□□ series

Product no.		Matching DIN-Rail
BCAP BCPC BCPK BCAR BCPR	091207	FDR - 80
	091208	80
	101507	110
	101508	110
	112107	170
	112110	170
	112607	223
	112610	223
	131508	120
	131808	150
	131810	150
	151509	120
	151512	120
	162110	170
	162113	170
	162610	223
	162613	223
	172211	170
	172711	223

BDN series

Product no.		Matching DIN-Rail
BDN	6- 8- 5	FDR - 50
	7-10- 4	–
	9- 9- 6	FDR - 80
	9-13- 5	120
	10-14- 7	128
	11-16- 6	150
	12-22- 8	205
	16-26- 9	242

BCAS series

Product no.		Matching DIN-Rail
BCAS	071005	FDR - 92
	080806	66
	081104	92
	081107	92
	081108	92
	081110	92
	081307	110
	081308	110
	081807	168
	081808	168
	082507	235
	082508	235
	101007	77
	101010	77
	101807	150
	102007	170
	102307	202
	121207	80
	121210	80
	141709	146
	142309	205
	151507	120
	151510	120
	152004	170
	152007	170
	152010	170
	152013	170
	152016	170
	152510	226
	152513	226
	161607	137

SPCM • SPCP series

Product no.		Matching DIN-Rail
SPCM SPCP	081304	FDR - 50/100
	081305	50/100
	081306	50/100
	081308	50/100
	081310	50/100
	081313	50/100
	101004	80
	101006	80
	131304	100
	131305	100
	131306	100
	131308	100
	131310	100
	131313	100
	131804	100/150
	131805	100/150
	131806	100/150
	131808	100/150
	131810	100/150
	131813	100/150
	131815	100/150
	181808	150
	181810	150
	181813	150
	181815	150
	182508	150/223
	182510	150/223
	182515	150/223

Accessories (Optional parts)

DIN-Rail stopper bracket TKR series
See page DIN-ACC-2

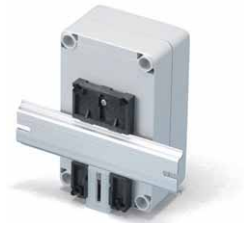

DIN-Rail mounting base DRA series
See page DIN-ACC-1

DIN-Rail mounting base DRT series
See page DIN-ACC-1

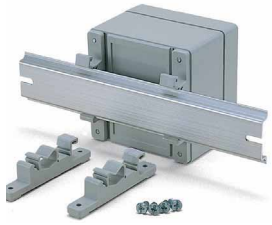

DIN-Rail mounting feet CKD series
See page DIN-ACC-2

DRA series DIN-RAIL MOUNTING BASE

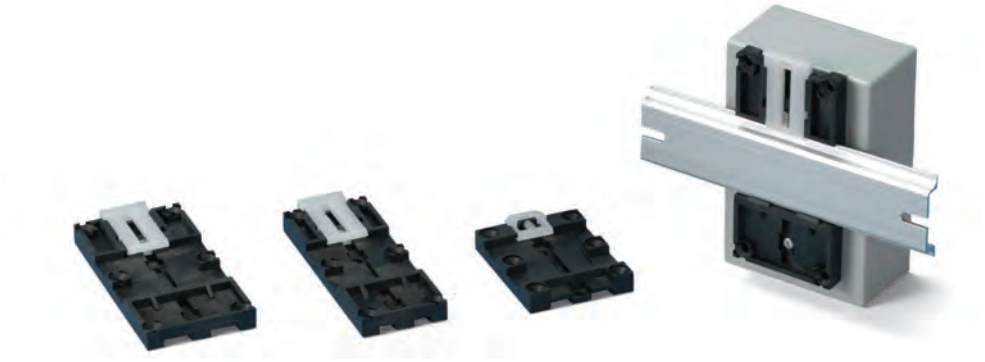

■ For installation of enclosures, PCB and other parts onto a DIN rail.
■ Simple installation and removal via the pull lever.

■ **NOTE**

Before installation, please ensure that the lever is not fully hidden behind the enclosure

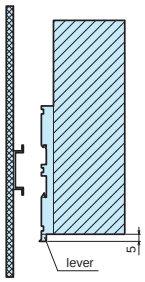

Technical Data
Max load : 5kg

DRA dimensions

DRA-1

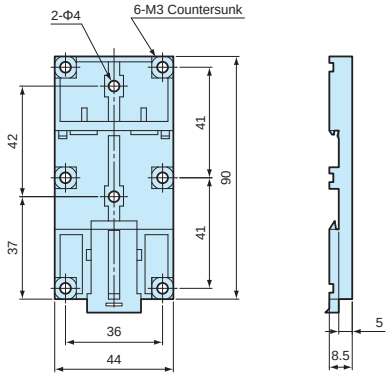

DRA-2

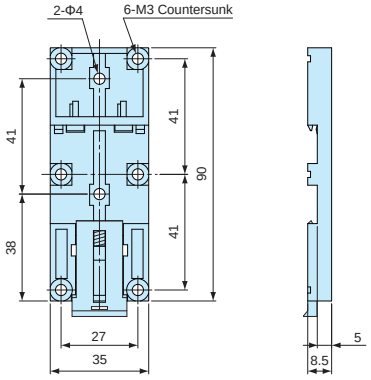

DRA-3

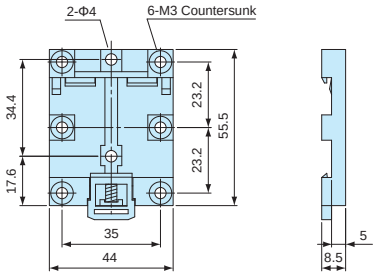

■ DXF/DWG/PDF drawings available on our website.

Product no. / Dimensions

Product no.	Material (body)	Material (lever)	Color	Weight (g)
DRA-1	PPE : SB UL94V-1	Nylon 66 UL94V-2	Black : White	16.4
DRA-2	PPE : SB UL94V-1	Nylon 66 UL94V-2	Black : White	14.5
DRA-3	PPE : SB UL94V-1	Nylon 66 UL94V-2	Black : White	10.4

DRT series DIN-RAIL MOUNTING BASE

DRT dimensions

■ DXF/DWG/PDF drawings available on our website.

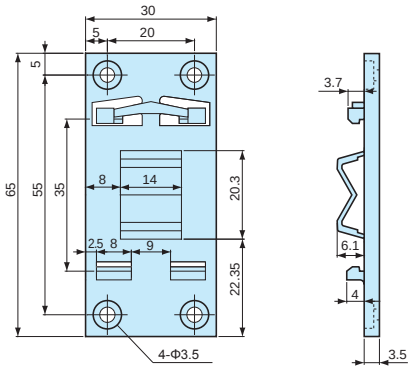

■ **NOTE**

Before installation, please ensure that the length (from top) of the enclosure is equal to, or less than 100mm from the center of the mounting base.

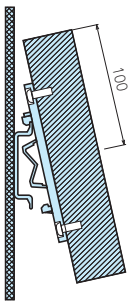

■ For installation of enclosures, PCB and other parts onto a DIN rail.
■ Simple installation and removal by tilting the case at an angle and sliding it in/out.

Technical Data
Max load : 1kg Operating temperature: -20°C ~ +70°C

Product no. / Dimensions

Product no.	Material	Color	Weight (g)
DRT-1	PC/ABS UL94V-0	Light gray	7.3

CKD SERIES DIN-RAIL MOUNTING FEET

Installation example

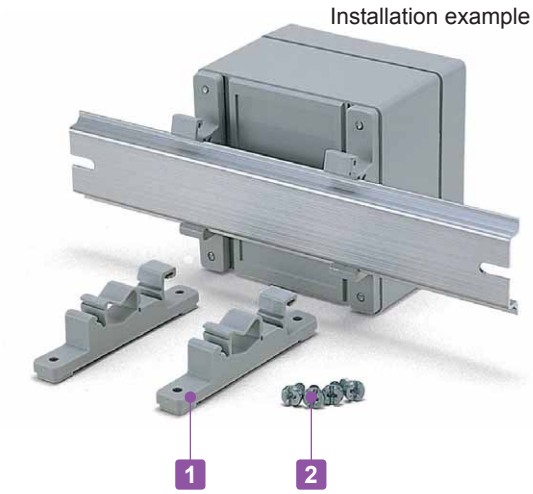

■ DXF/DWG/PDF drawings available on our website.

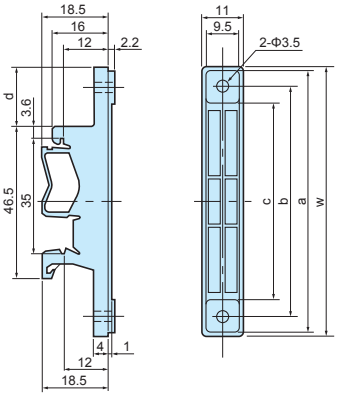

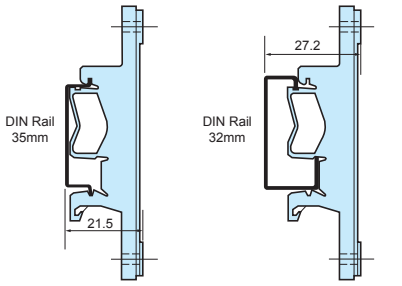

■ Mounting feet for installation of enclosures, PCB and other parts onto a DIN rail. Can be easily detached.

Technical Data
Max load : 3kg

Components

No.	Part name	Pcs	Material	Color / Finish
1	Mounting feet	2	Polyamide	White gray
2	Screw (special type 4.2 x 9.5)	4	Screw	Unichrome plated

Product no. / Dimensions

Product no.	W	a	b	c	d	Pack of
CKD- 80	77	75	66	56	17	2
CKD-120	117	115	106	96	37	2
CKD-160	157	155	147	136	57	2

TKR SERIES DIN-RAIL TERMINAL BLOCKS END STOPPER

■ DXF/DWG/PDF drawings available on our website.

TKR-TWE1

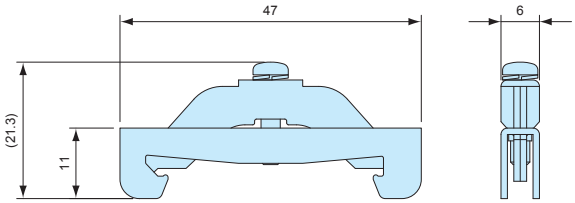

TKR-JTXE3

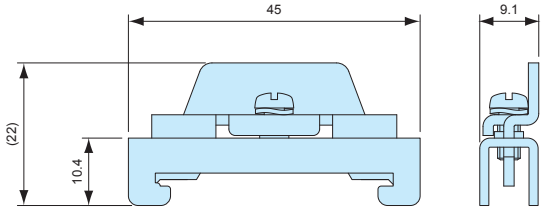

■ Stopper bracket for use with 35mm DIN-rail to keep an attachment at a fixed location.

■ TKR-TWE1 is used with small DIN rail attachment parts. For larger/ higher attachment parts, TKR-JTXE3 is recommended for providing additional support.

Product no. / Feature

Product no.	Material	Color / Finish	Pack of
TKR-TWE1	Steel sheet	Trivalent chromate	2
TKR-JTXE3	Steel sheet	Trivalent chromate	2

HQ SERIES IP67 EMC SHIELDED DIECAST ALUMINIUM BOX

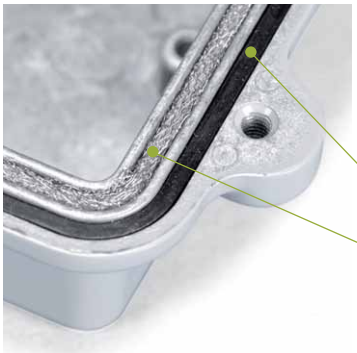

Technical Data
Protection class : IP67 Operating temperature : -40°C ~ +105°C Recommended torque : 1N • m

- A double gasket construction allows both IP67 protection and EMC shielding to be possible.
- 13 different sizes available with 2 different finish types.
- Suitable for CATV terminal, fiber optic transmitter, FA controller, and so on.
- Available in powder coated model and unfinished model.

APPLICATION EXAMPLE

CATV OPTICAL NODE

LPWA OUTDOOR GATEWAY

WIFI ACCESS POINT

Accessories (Optional parts)

Mounting bracket HQF series
See page HQ-7

Pole Mounting bracket SSK series
See page SSK-M-1 ~ SSK-M-3

Mounting plate HQP series
See page HQ-8

Mountng screw MT series
See page HQ-7

Cable gland
See cable gland pages

Protective vent PMF series
See PMF pages

Product no. / Dimensions

Product no.		Dimensions			Weight (g)
● Light gray	○ Unfinished	W	D	H	
HQ10-10- 5G	HQ10-10- 5N	96.3	96.8	45	302
HQ10-10- 7G	HQ10-10- 7N	96.8	96.8	67	335
HQ15-10- 5G	HQ15-10- 5N	150	100	50	442
HQ15-10- 8G	HQ15-10- 8N	150	99.5	75	494
HQ16-16- 6G	HQ16-16- 6N	162	162	55	626
HQ16-16- 8G	HQ16-16- 8N	162	162	80	715
HQ19-10- 5G	HQ19-10- 5N	192	96	45	507
HQ19-10- 7G	HQ19-10- 7N	192	96	67	590
HQ20-15- 5G	HQ20-15- 5N	200	150	50	753
HQ20-15- 8G	HQ20-15- 8N	200	150	75	849
HQ26-18- 6G	HQ26-18- 6N	262	181.5	55	961
HQ27-17- 7G	HQ27-17- 7N	274.2	173.2	66	1,129
HQ27-17-10G	HQ27-17-10N	274.2	172.7	100	1,287

HQ dimensions

HQ10-10-5
HQ10-10-7

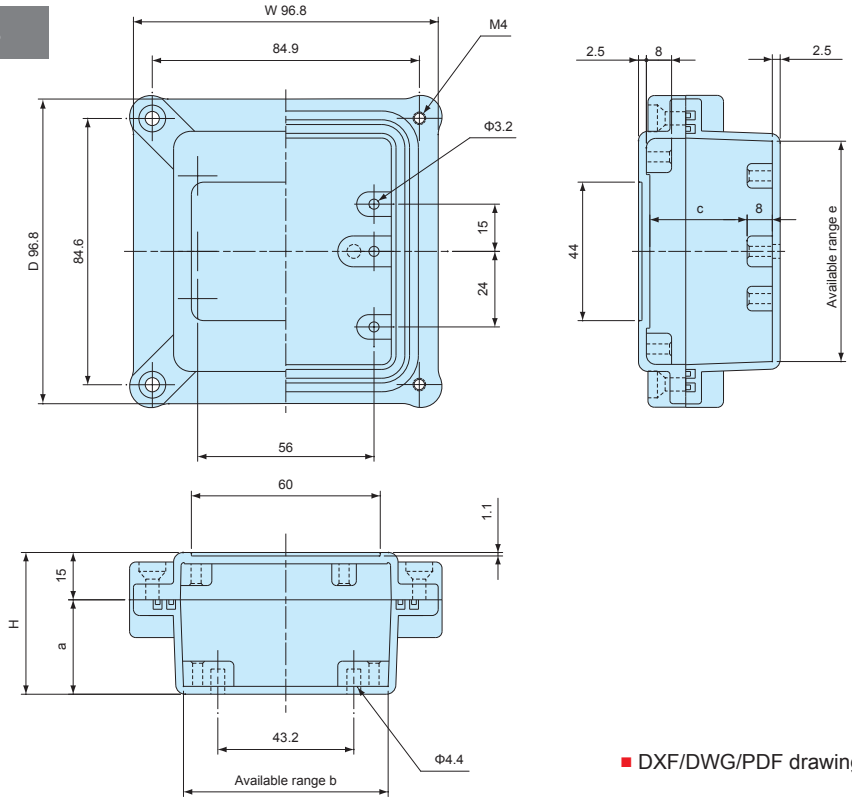

■ DXF/DWG/PDF drawings available on our website.

Product no.	W	D	H	a	b	c	e
HQ10-10- 5	96.3	96.8	45	30	64	30.9	69
HQ10-10- 7	96.8	96.8	67	52	64	52.9	69

HQ dimensions

■ DXF/DWG/PDF drawings available on our website.

HQ15-10-5
HQ15-10-8

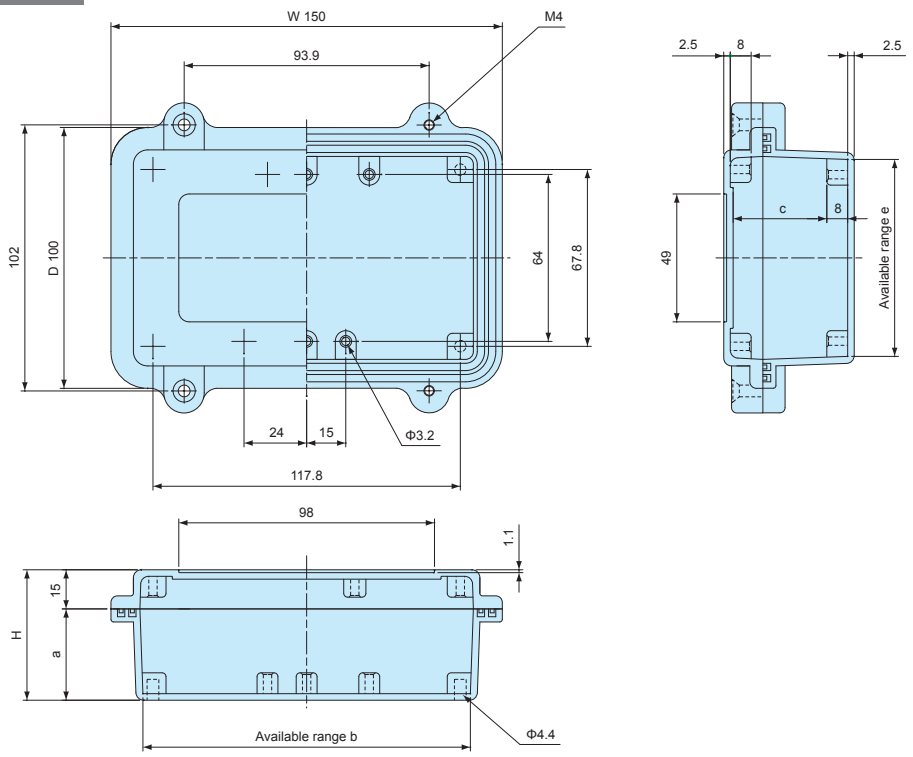

Product no.	W	D	H	a	b	c	e
HQ15-10- 5	150	100	50	35	125.5	35.9	75.5
HQ15-10- 8	150	99.5	75	60	123.7	60.9	73.7

HQ16-16-6
HQ16-16-8

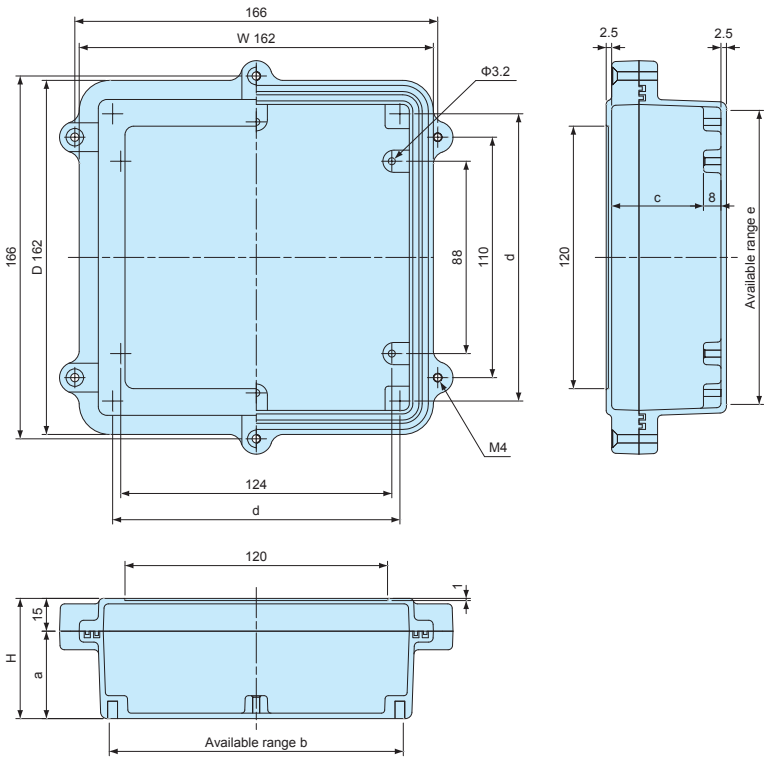

Product no.	W	D	H	a	b	c	d	e
HQ16-16- 6	162	162	55	40	134.5	42	131.41	134.5
HQ16-16- 8	162	162	80	65	132.7	67	129.66	132.7

HQ dimensions

■ DXF/DWG/PDF drawings available on our website.

HQ19-10-5
HQ19-10-7

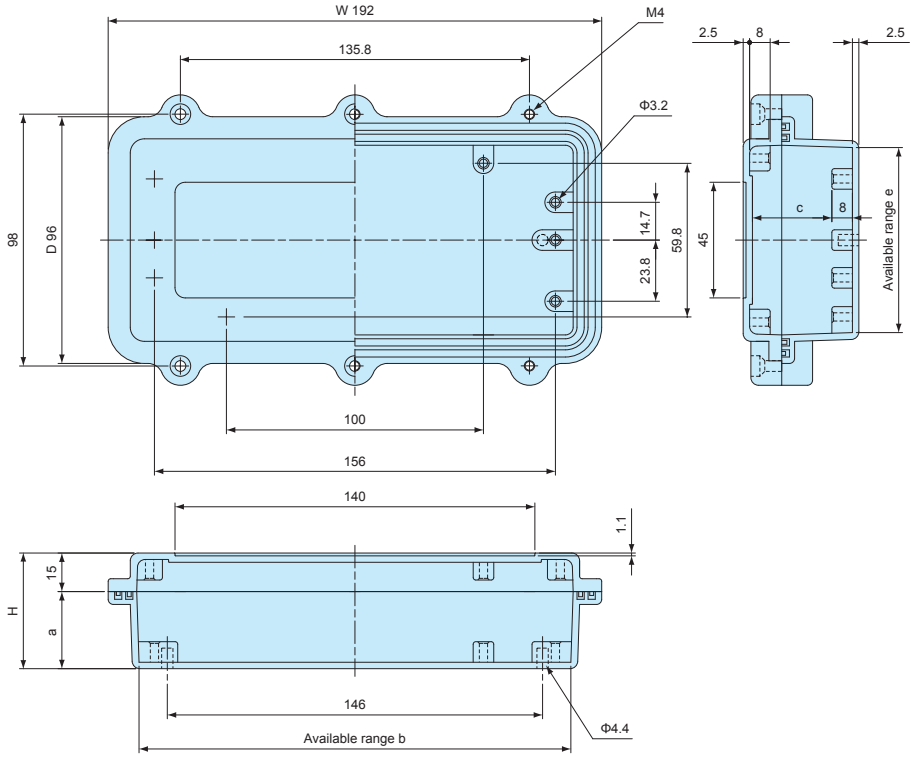

Product no.	W	D	H	a	b	c	e
HQ19-10- 5	192	96	45	30	168	30.9	72
HQ19-10- 7	192	96	67	52	166.6	52.9	70.6

HQ20-15-5
HQ20-15-8

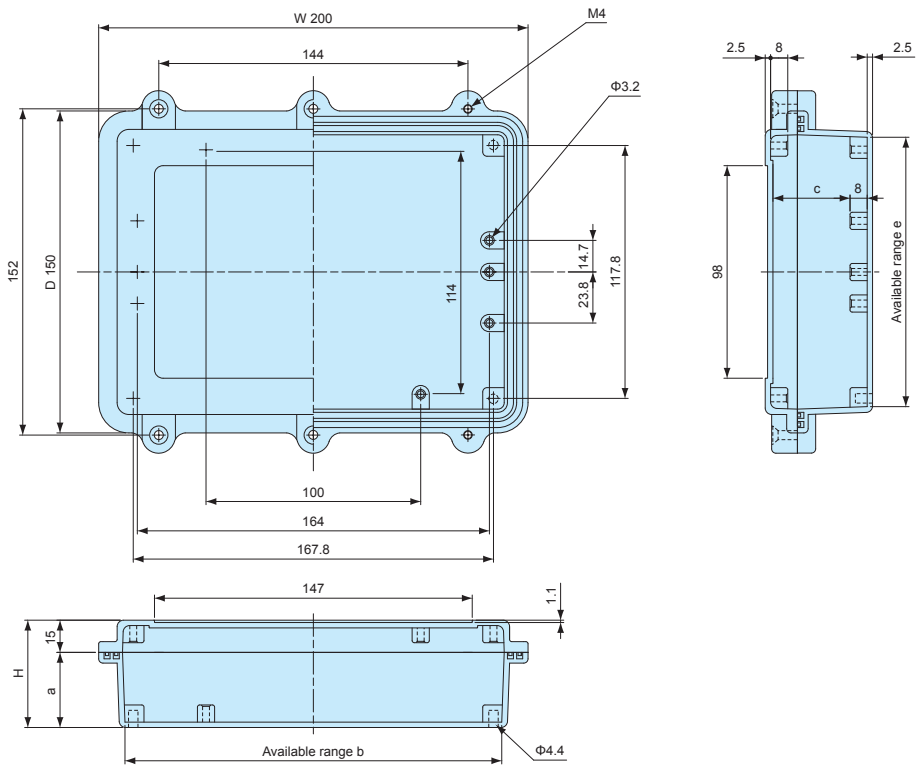

Product no.	W	D	H	a	b	c	e
HQ20-15- 5	200	150	50	35	175.5	35.9	125.5
HQ20-15- 8	200	150	75	60	173.7	60.9	123.7

HQ dimensions

■ DXF/DWG/PDF drawings available on our website.

HQ26-18-6

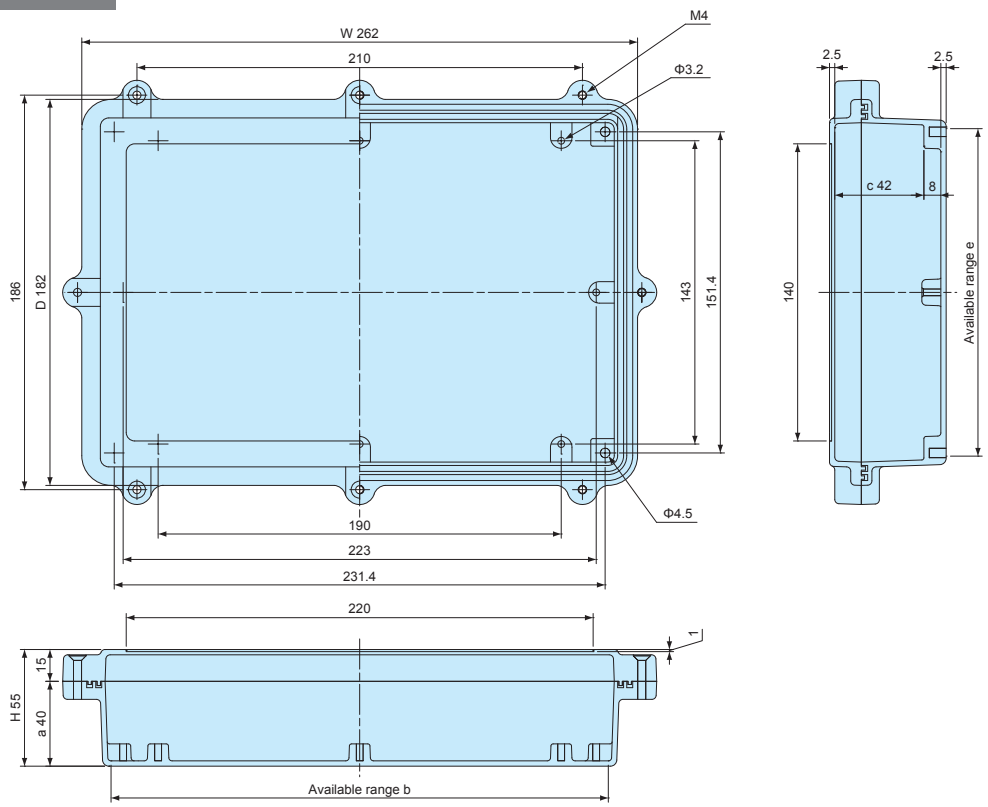

Product no.	W	D	H	a	b	c	e
HQ26-18- 6	262	181.5	55	40	234.4	42	154.4

HQ27-17- 7
HQ27-17-10

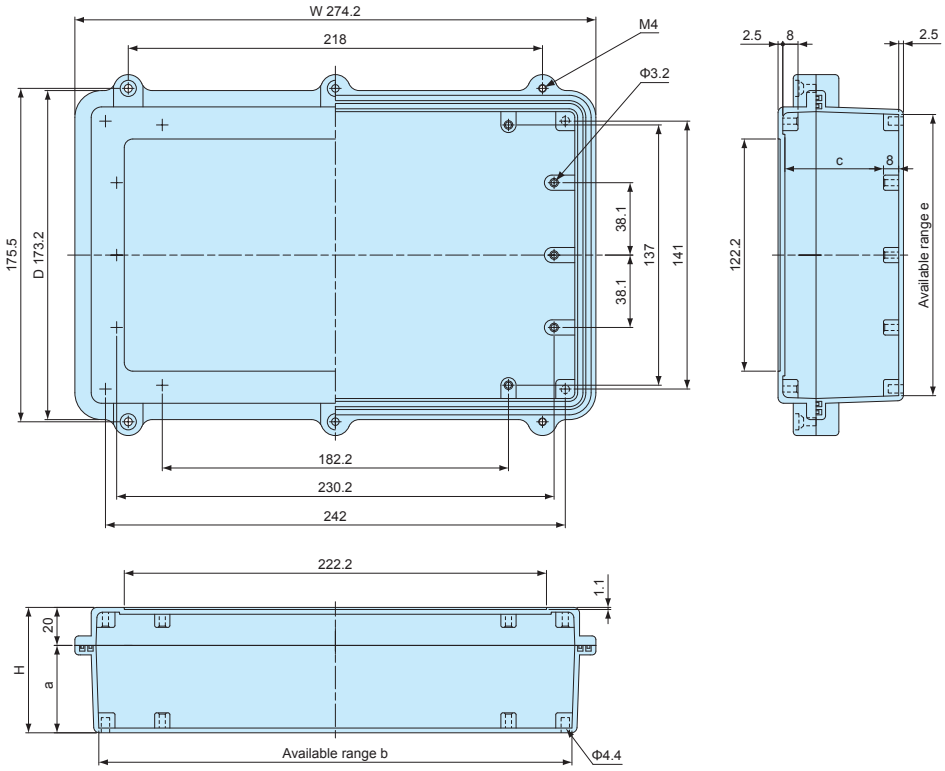

Product no.	W	D	H	a	b	c	e
HQ27-17- 7	274.2	173.2	66	46	249	51.9	148
HQ27-17-10	274.2	172.7	100	80	249	85.9	148

EMI SHIELDING TEST DATA

Test Result by Gestek

Date : 2007/12/20

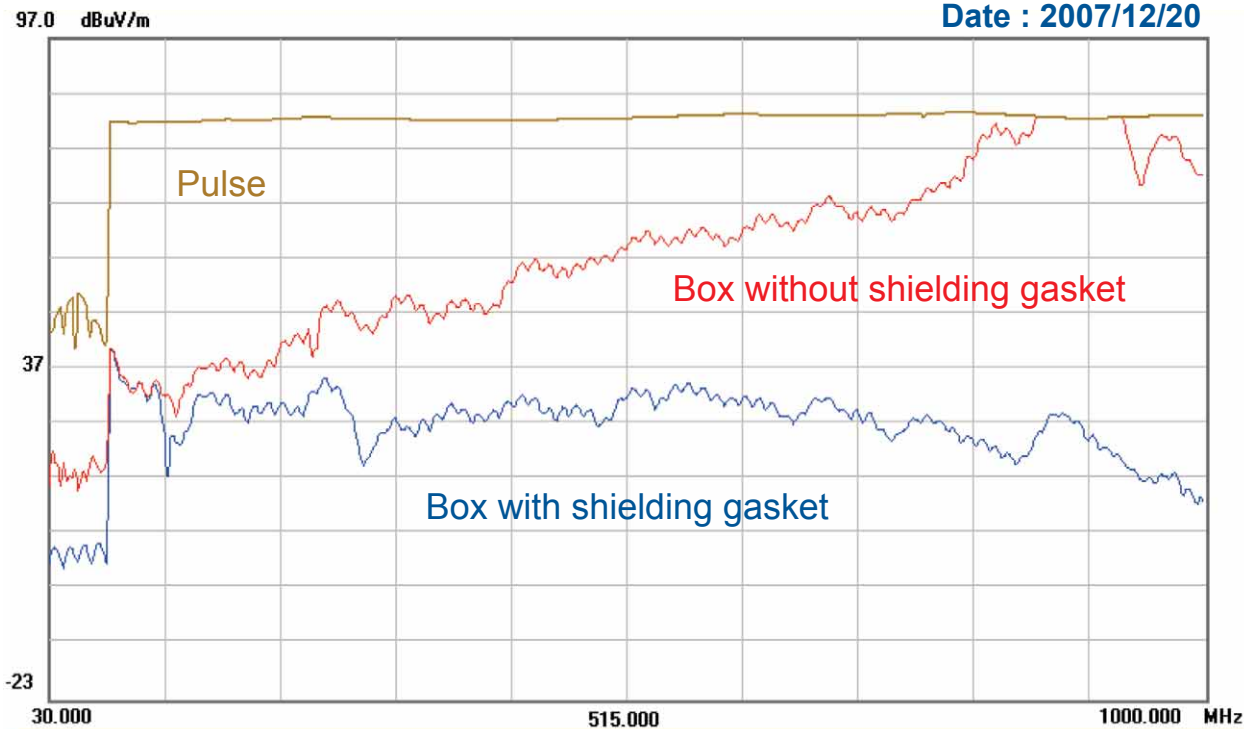

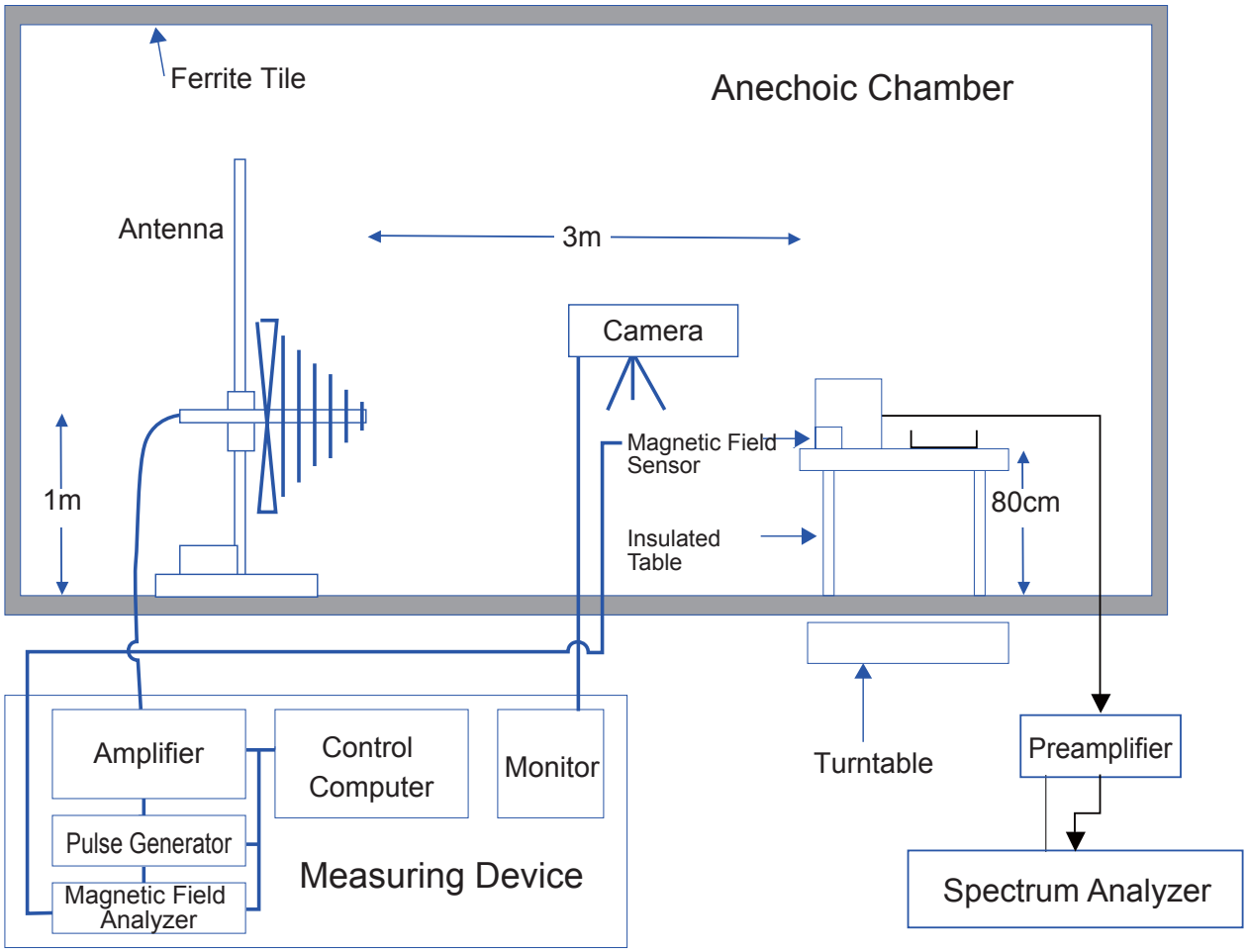

HQF SERIES MOUNTING BRACKET for HQ

■ DXF/DWG/PDF drawings available on our website.

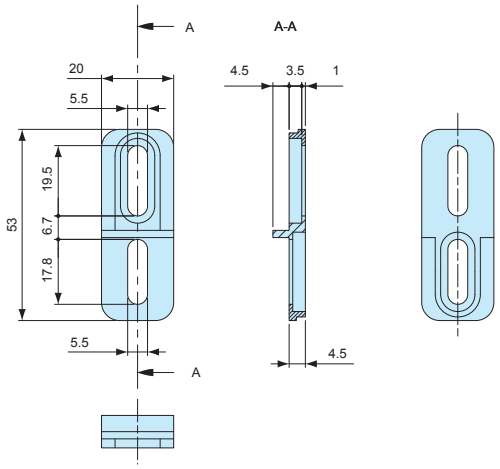

Components

Part name	Pcs	Material	Color / Finish
Mounting bracket	4	Diecast aluminium ADC12	Powder coated • Unfinished
Screw	4	Stainless steel	Unfinished

Product no. / Feature

Product no.	Color / Finish	Suitable box	Pack of
HQF-1G	Light gray / Powder coated	HQ all models	4
HQF-1N	Unfinished	HQ all models	4

MT SERIES MOUNTING SCREW for HQ

Product no. / Feature

Product no.	Material	Color / Finish	Pack of
MT3.5-8K	Steel	Trivalent chromate	4

HQG SERIES WATERPROOF GASKET for HQ

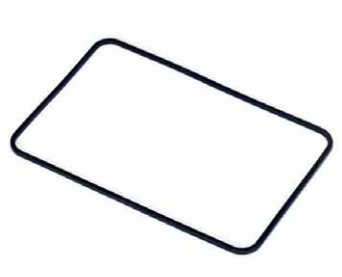

Product no. / Suitable box

Product no.	Suitable box
HQG1010	HQ10-10-□
HQG1510	HQ15-10-□
HQG1616	HQ16-16-□
HQG1910	HQ19-10-□
HQG2015	HQ20-15-□
HQG2618	HQ26-18-□
HQG2717	HQ27-17-□

■ Material : Silicone

HQE SERIES SHIELDING GASKET for HQ

EMC Shielding Effects

Product no. / Suitable box

Product no.	Suitable box
HQE1010	HQ10-10-□
HQE1510	HQ15-10-□
HQE1616	HQ16-16-□
HQE1910	HQ19-10-□
HQE2015	HQ20-15-□
HQE2618	HQ26-18-□
HQE2717	HQ27-17-□

■ Material : Stainless steel • Silicone (White)

HQP SERIES MOUNTING PLATE for HQ

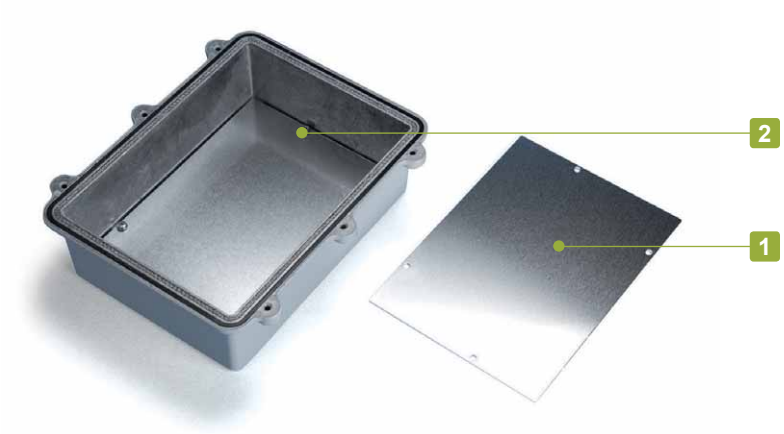

Components

No.	Part name	Pcs	Material	Color / Finish
1	Mounting plate	1	Aluminium A1050P t = 1.5	Unfinished
2	Screw (MT3.5-8K)	4	Steel	Trivalent chromate

■ Drawings below are reference examples only.
DXF/DWG/PDF drawings available on our website.

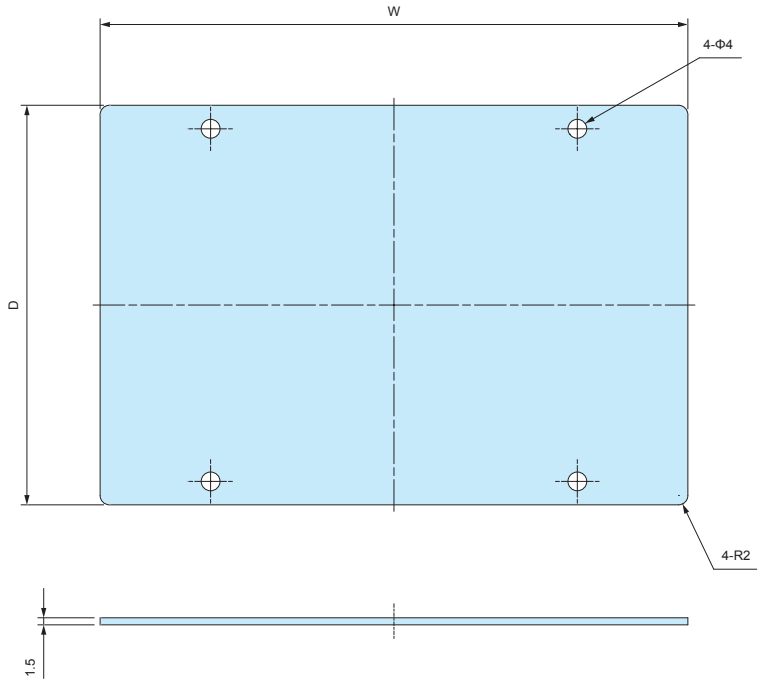

Product no. / Dimensions

Product no.	W	D	Suitable box
HQP10-10	63	68	HQ10-10-5 • HQ10-10-7
HQP15-10	122	72	HQ15-10-5 • HQ15-10-8
HQP16-16	132	132	HQ16-16-6 • HQ16-16-8
HQP19-10	166	70	HQ19-10-5 • HQ19-10-7
HQP20-15	172	122	HQ20-15-5 • HQ20-15-8
HQP26-18	235	155	HQ26-18-6
HQP27-17	248	147	HQ27-17-7 • HQ27-17-10

SSK SERIES POLE MOUNTING BRACKET

- Stainless steel pole mounting bracket.
- Welding onto stainless steel case can be performed to maintain waterproof ability.
- Use SSK-B series screws (see page SSK-M-2) for installation on diecast aluminium box.
- Use PKB mounting belt (see page PKB-1) for installation onto a pole.

SSK dimensions

■ DXF/DWG/PDF drawings available on our website.

SSK-S1

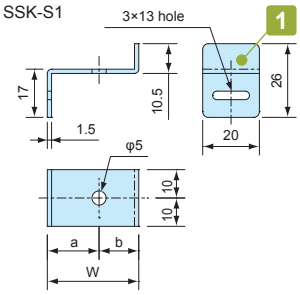

SSK-P50 • 60 • 75 • 80

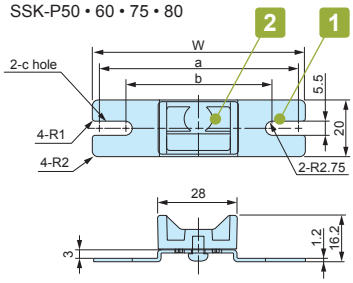

SSK-P100 • 120

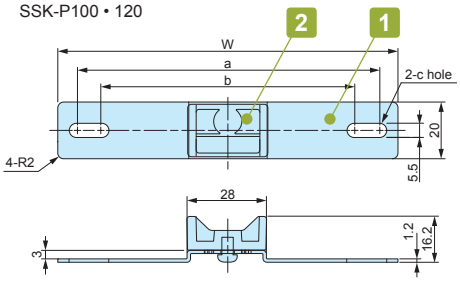

SSK-160 ~ 250

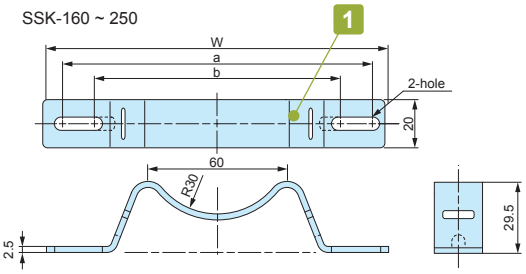

SSK-280 ~ 350

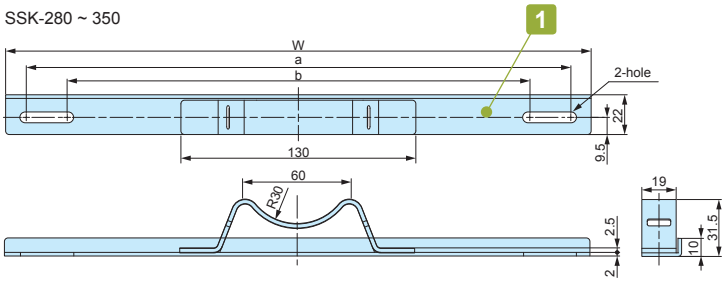

SSK-400

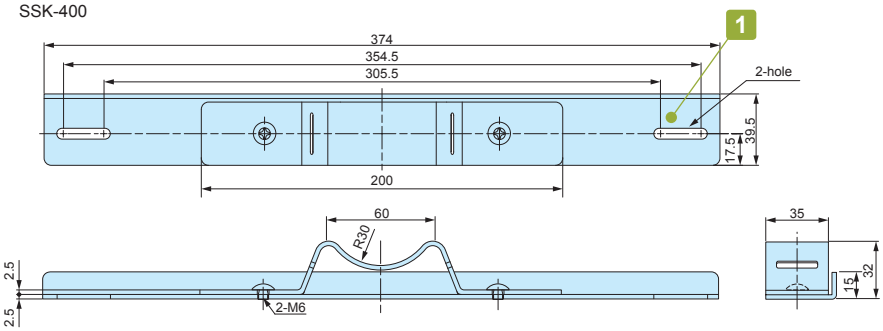

SSK-530

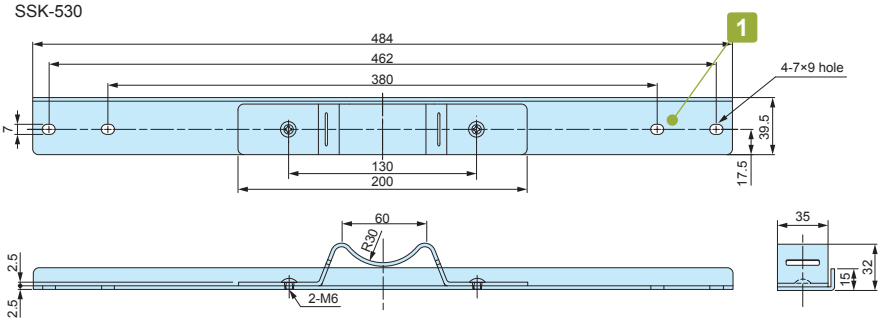

Components

No.	Part name	Pcs	Material	Color / Finish
1	Bracket	2	Stainless steel SUS304	Barrel finish
2	Mounting bracket (SSK-P models only)	2	ASA UL94HB	White gray

Product no. / Dimensions

Product no.	W	a	b	c	Suitable mounting belt	Pack of
SSK-S1	32.25	18.25	14	—	PKB-10PM, 10P, PKB-10S	4
SSK-P50	50	44.5	37.5	5.5× 9	PKB-10PM, 10P, PKB-10S	2
SSK-P60	60	54.5	47.5	5.5× 9	PKB-10PM, 10P, PKB-10S	2
SSK-P75	75	69.5	55.5	5.5×12.5	PKB-10PM, 10P, PKB-10S	2
SSK-P80	80	74.5	64.5	5.5×10.5	PKB-10PM, 10P, PKB-10S	2
SSK-P100	100	88.1	76.5	5.5×11.3	PKB-10PM, 10P, PKB-10S	2
SSK-P120	120	106.5	88.5	5.5×14.5	PKB-10PM, 10P, PKB-10S	2
SSK-160	142	129.5	106.5	–	PKB-10PM, 10P, PKB-10S	2
SSK-170	152	142.3	101	–	PKB-10PM, 10P, PKB-10S	2
SSK-200	174	161.5	112.5	–	PKB-10PM, 10P, PKB-10S	2
SSK-210	192	180.5	131.5	–	PKB-10PM, 10P, PKB-10S	2
SSK-250	230	215.5	166.5	–	PKB-10PM, 10P, PKB-10S	2
SSK-280	260	244.5	195.5	–	PKB-10PM, 10P, PKB-10S	2
SSK-300	280	264.5	215.5	–	PKB-10PM, 10P, PKB-10S	2
SSK-350	324	302.5	253.5	–	PKB-10PM, 10P, PKB-10S	2
SSK-400	374	354.5	305.5	–	PKB-20S	2
SSK-530	484	462	380	7×9	PKB-20S	2

SSK-B SERIES MOUNTING SCREW SET for SSK

- Mounting screw set for use with SSK pole mounting bracket.
- See below chart for appropriate screw / box combination.
- Material / Finish : Stainless steel / Unfinished.

Product no. / Dimensions

Product no.	Included screws	Suitable box	Pcs
SSK-B4-15N	M4-15 Pan head with nut	AW5-4-7 ~ AW8-5-18	4
SSK-B4-25N	M4-25 Pan head with nut	BDN9-9-6, BDN10-14-7	4
SSK-B5-8T	M5-8 Binding head tapping	HQ series	4
SSK-B5-15N	M5-15 Pan head with nut	AW9-9-10 ~ AW21-9-31	4
SSK-B5-25N	M5-25 Pan head with nut	BDN12-22-8, BDN16-26-9	4

- Installation Example

M5 thread fastening

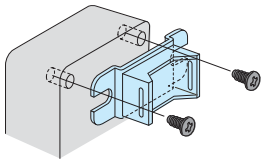

SSK-B5-8T

M4/M5 Pan head with nut fastening

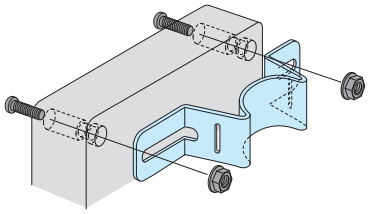

SSK-B4-15N SSK-B4-25N
SSK-B5-15N SSK-B5-25N
SSK-B5-35N SSK-B6-40N

POLE MOUNTING BRACKET / SCREW SET MATCHING CHART

BDN series

Box Product no.		SSK Product no.		Screw set Product no.
		Vertical mount	Horizontal mount	
BDN	9-9-6	SSK-P75	SSK-P100	SSK-B4-25-N
	10-14-7	SSK-P80	SSK-160	SSK-B4-25-N
	12-22-8	SSK-P100	SSK-250	SSK-B5-25-N
	16-26-9	SSK-160	SSK-280	SSK-B5-25-N

HQ series

Box Product no.		SSK Product no.		Screw set Product no.
		Vertical mount	Horizontal mount	
HQ	10-10-5 • 10-10-7	SSK-P50	–	SSK-B5-8T
	15-10-5 • 15-10-8	SSK-P80	SSK-160	SSK-B5-8T
	15-11-3	SSK-P100	SSK-160	SSK-B5-8T
	16-16-6 • 16-16-8	SSK-170	SSK-170	SSK-B5-8T
	19-10-5 • 19-10-7	–	SSK-200	SSK-B5-8T
	20-15-3 • 20-15-5 • 20-15-9	SSK-160	SSK-210	SSK-B5-8T
	26-18-6	SSK-200	SSK-280	SSK-B5-8T
	27-17-7 • 27-17-10	SSK-170	SSK-280	SSK-B5-8T

SSM • SSB series

■ Installation should be done by welding.

Box Product no.				SSK Product no.	
				Vertical mount	Horizontal mount
SSM SSB	121508			SSK-S1	–
	151508	152206	152210	SSK-160	–
	202010	202806		SSK-210	–
	202812	223312			
	304015			SSK-300	–

■ SSK bracket is different depending on mount type (Vertical or Horizontal).

Vertical mount
(Longer vertical side)

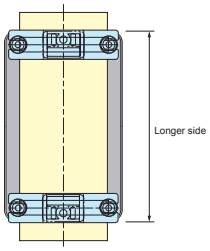

Horizontal mount
(Longer horizontal side)

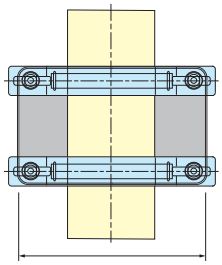

AW series

Box Product no.		SSK Product no.		Screw set Product no.
		Vertical mount	Horizontal mount	
AW	5-4-7	–	SSK-P100	SSK-B4-15N
	5-4-9	–	SSK-P120	SSK-B4-15N
	5-4-11	–	SSK-160	SSK-B4-15N
	5-4-14	–	SSK-200	SSK-B4-15N
	7-7-8	SSK-P50	SSK-P120	SSK-B4-15N
	7-7-11	SSK-P50	SSK-160	SSK-B4-15N
	7-7-15	SSK-P50	SSK-210	SSK-B4-15N
	7-7-20	SSK-P50	SSK-250	SSK-B4-15N
	7-7-25	SSK-P50	SSK-300	SSK-B4-15N
	8-5-9	SSK-P75	SSK-160	SSK-B4-15N
	8-5-12	SSK-P75	SSK-160	SSK-B4-15N
	8-5-14	SSK-P75	SSK-200	SSK-B4-15N
	8-5-18	SSK-P75	SSK-250	SSK-B4-15N
	9-9-10	SSK-P75	SSK-160	SSK-B5-15N
	9-9-13	SSK-P75	SSK-170	SSK-B5-15N
	9-9-17	SSK-P75	SSK-250	SSK-B5-15N
	9-9-22	SSK-P75	SSK-280	SSK-B5-15N
	9-9-28	SSK-P75	SSK-350	SSK-B5-15N
	11-6-11	SSK-P100	SSK-160	SSK-B5-15N
	11-6-15	SSK-P100	SSK-210	SSK-B5-15N
	11-6-19	SSK-P100	SSK-250	SSK-B5-15N
	11-6-24	SSK-P100	SSK-300	SSK-B5-15N
	12-8-11	SSK-P120	SSK-160	SSK-B5-15N
	12-8-14	SSK-P120	SSK-200	SSK-B5-15N
	12-8-17	SSK-P120	SSK-250	SSK-B5-15N
	12-8-22	SSK-P120	SSK-280	SSK-B5-15N
	16-9-14	SSK-160	SSK-200	SSK-B5-15N
	16-9-18	SSK-160	SSK-250	SSK-B5-15N
	16-9-23	SSK-160	SSK-280	SSK-B5-15N
	16-9-28	SSK-160	SSK-350	SSK-B5-15N
	21-9-17	SSK-210	SSK-250	SSK-B5-15N
	21-9-21	SSK-210	SSK-280	SSK-B5-15N
	21-9-26	SSK-210	SSK-350	SSK-B5-15N
	21-9-31	SSK-210	SSK-400	SSK-B5-15N

SNB series STAINLESS STEEL POLE MOUNTING STRAP NEW

SNB dimensions

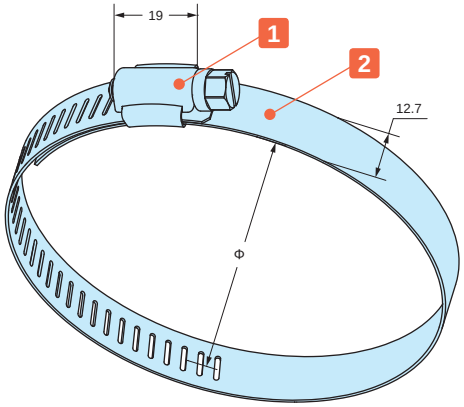

- Corrosion resistant stainless steel (SUS304) belt clamp.
- It can be installed securely by tightening the screw.
- 8 mm nut driver (box driver) is recommended for tightening. Minus screw driver can also be used.

Components

No.	Part name	Pcs	Material	Finish
1	Bracket	1	Stainless steel SUS304	Polished
2	Strap	1	Stainless steel SUS304	Polished

Product no. / Dimensions

Product no.	Applicable diameter (Φ)	Strap width	Strap thickness	Recommended torque N • m	Weight (g)	Pack of
SNB 52- 76	52 ~ 76	12.7	0.6	0.7 ~ 1.0	27.5	1
SNB 72- 95	72 ~ 95	12.7	0.6	0.7 ~ 1.0	30	1
SNB 91-114	91 ~ 114	12.7	0.6	0.7 ~ 1.0	34.5	1
SNB105-127	105 ~ 127	12.7	0.6	0.7 ~ 1.0	37.5	1
SNB117-140	117 ~ 140	12.7	0.6	0.7 ~ 1.0	39.5	1
SNB130-153	130 ~ 153	12.7	0.6	0.7 ~ 1.0	41.5	1
SNB142-165	142 ~ 165	12.7	0.6	0.7 ~ 1.0	43.5	1
SNB155-178	155 ~ 178	12.7	0.6	0.7 ~ 1.0	46.5	1
SNB168-191	168 ~ 191	12.7	0.6	0.7 ~ 1.0	49	1
SNB181-204	181 ~ 204	12.7	0.6	0.7 ~ 1.0	51	1
SNB194-217	194 ~ 217	12.7	0.6	0.7 ~ 1.0	52.5	1
SNB207-230	207 ~ 230	12.7	0.6	0.7 ~ 1.0	57	1
SNB220-243	220 ~ 243	12.7	0.6	0.7 ~ 1.0	59.5	1
SNB233-256	233 ~ 256	12.7	0.6	0.7 ~ 1.0	62.5	1
SNB246-269	246 ~ 269	12.7	0.6	0.7 ~ 1.0	64	1
SNB259-282	259 ~ 282	12.7	0.6	0.7 ~ 1.0	67.5	1
SNB272-295	272 ~ 295	12.7	0.6	0.7 ~ 1.0	70	1
SNB285-308	285 ~ 308	12.7	0.6	0.7 ~ 1.0	71	1

- Recommended torque listed is for reference only; actual may differ. Assemble after testing torque.

SNB Strap required

Suitable series	Suitable models						Required
SSK series	SSK-S1	SSK-160	SSK-170	SSK-200	SSK-210	SSK-250	2
	SSK-280	SSK-300	SSK-350	SSK-400	SSK-530		
WGMB series	WGMB-1W						1

PKB series POLE MOUNTING BELT

PKB−10PM, 10P

PKB−10S, 20S

- Pole mounting belt for attachment of enclosures with suitable pole mount brackets or construction onto poles.
- Designed for one time use only (not reusable).
- Strong stainless steel clamping type and easy installation plastic type are available.

PKB dimensions

- DXF/DWG/PDF drawings available on our website.

PKB-10PM, 10P

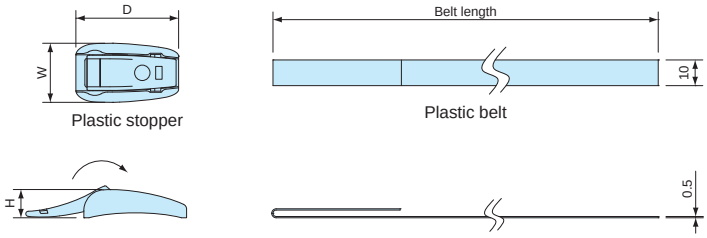

PKB-10S

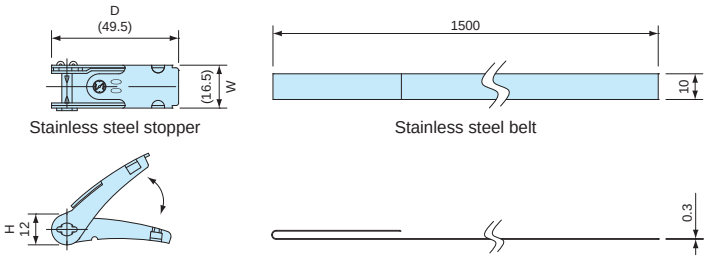

PKB-20S

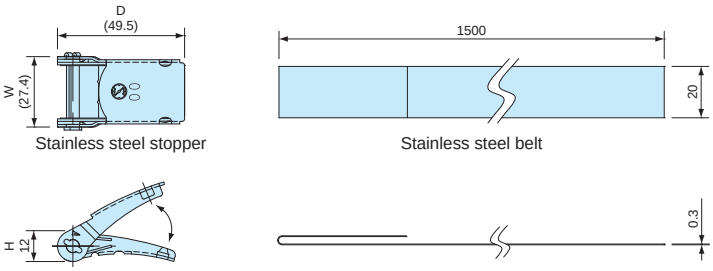

Components

No.	Part name	Material	Color / Finish
1	Stopper	Stainless steel SUS304 • POM	Barrel finish • Black
2	Belt	Stainless steel SUS430 • PET	Bright annealed finish • Gray

Product no. / Dimensions

Product no.	W	D	H	Belt length	Belt material	Tensile strength (horizontal)	Weight (g)	Pack of
PKB-10PM	24	23	11	500 mm	PET	0.8kN	14	2
PKB-10PM	23	40	11	1,500 mm	PET	1.3kN	31.8	2
PKB-10S	16.5	49.5	12	1,500 mm	Stainless steel SUS304	1.4kN	101.6	2
PKB-20S	27.4	49.5	12	1,500 mm	Stainless steel SUS430	2.9kN	182.2	2

TMA SERIES DIECAST ALUMINIUM TERMINAL JUNCTION BOX

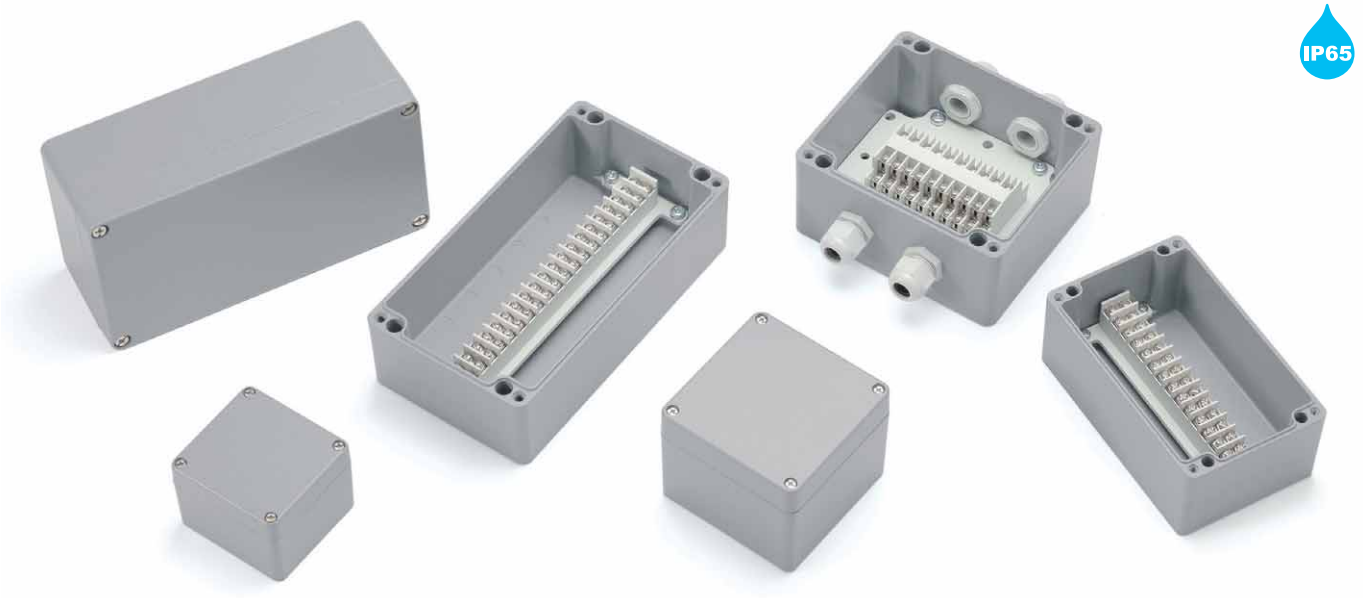

IP65

- IP65 protection class and impact resistant diecast aluminium terminal junction box.
- Diecast aluminum box has superior heat dissipation, heat resistance, and oil resistance compared to plastic box.
- Available in 6 different sizes with 6 to 30 poles configurations.

Technical Data

Protection class: IP65
Operating temperature: -40°C ~ +80°C
Recommended torque: 1N • m

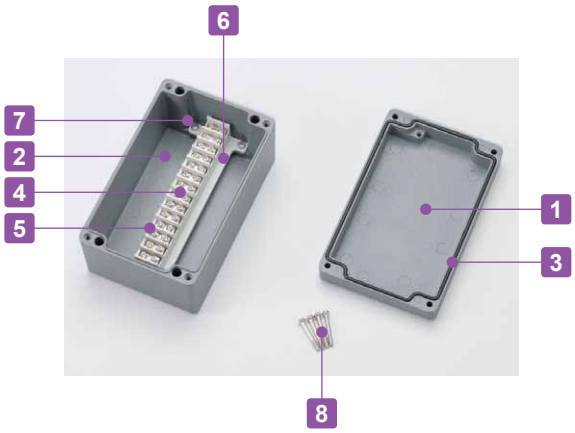

Terminal Block Specification

Rated voltage	400V
Rated current	17.5A
Applicable wire	1.5mm²
Standard tightening torque	0.8N • m

Applicable crimp terminal R1.25-3.5

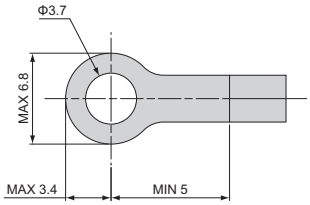

Components

No.	Part name	Pcs	Material	Color / Finish
1	Top cover	1	Diecast aluminium	Light gray / Painted
2	Body	1	Diecast aluminium	Light gray / Painted
3	Gasket	1	Polyurethane	Black
4	Conductive plate	6 ~ 30	Brass	Nickel plated
5	Terminal screw (M3.5 Pan head)	12 ~ 60	Steel	Nickel plated
6	Terminal base	1	PBT (UL94V-0)	Light gray
7	Terminal mount screw (M4 • M6 Pan head)	2 ~ 4	Steel	Trivalent chromate
8	Cover screw	4	Stainless steel	Unfinished

Accessories (Optional parts)

Shorting bar SBR series
See page SBR-1

Cable gland
See cable gland pages

Product no. / Dimensions

Product no.	L	W	H	Number of poles	Weight (g)
TMA- 6P	80	75	57.5	6P	341
TMA- 9P	100	100	80	9P	642
TMA-15P	100	160	80	15P	867
TMA-20P-AS	132	150	90	10P × 2	1,394
TMA-20P	120	220	80	20P	1,426
TMA-30P-AS	120	220	80	15P × 2	1,529

TMA dimensions

■ Drawings below are reference examples only.
DXF/DWG/PDF drawings available on our website.

TMA-6P

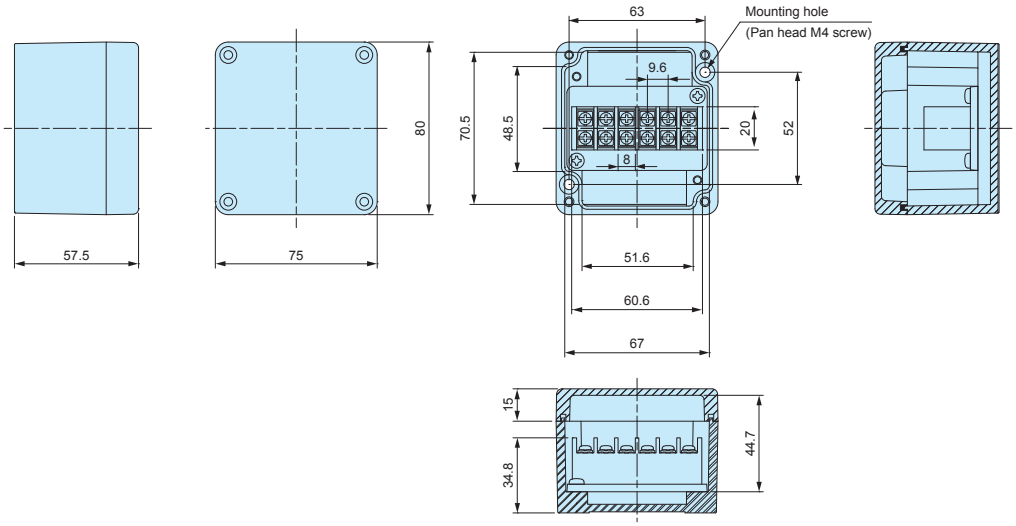

TMA-9P

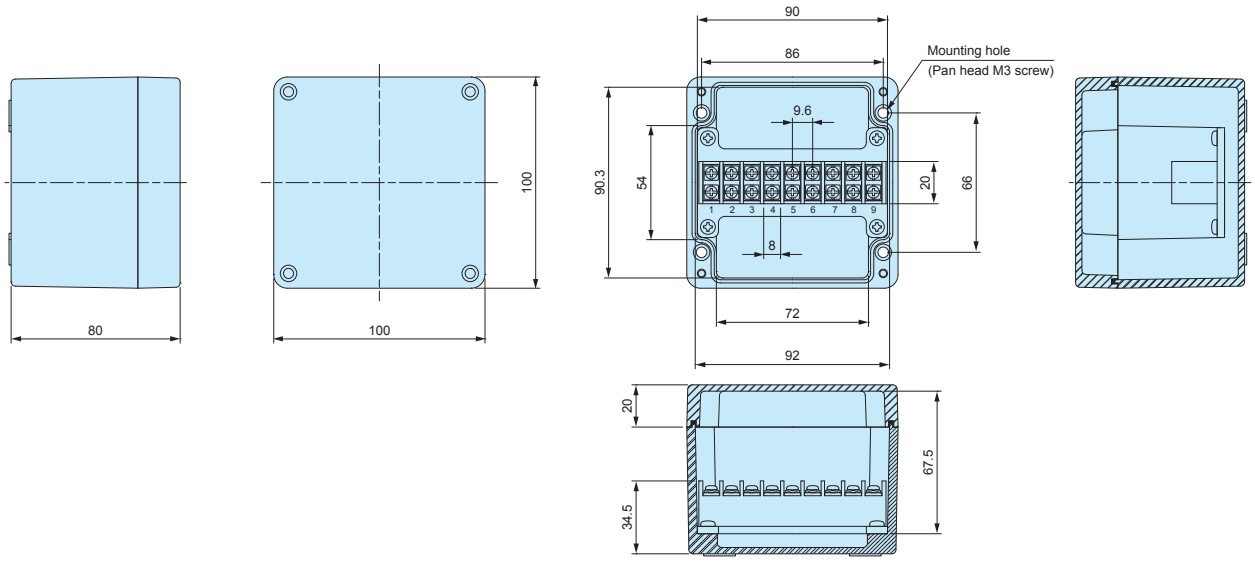

TMA-15P

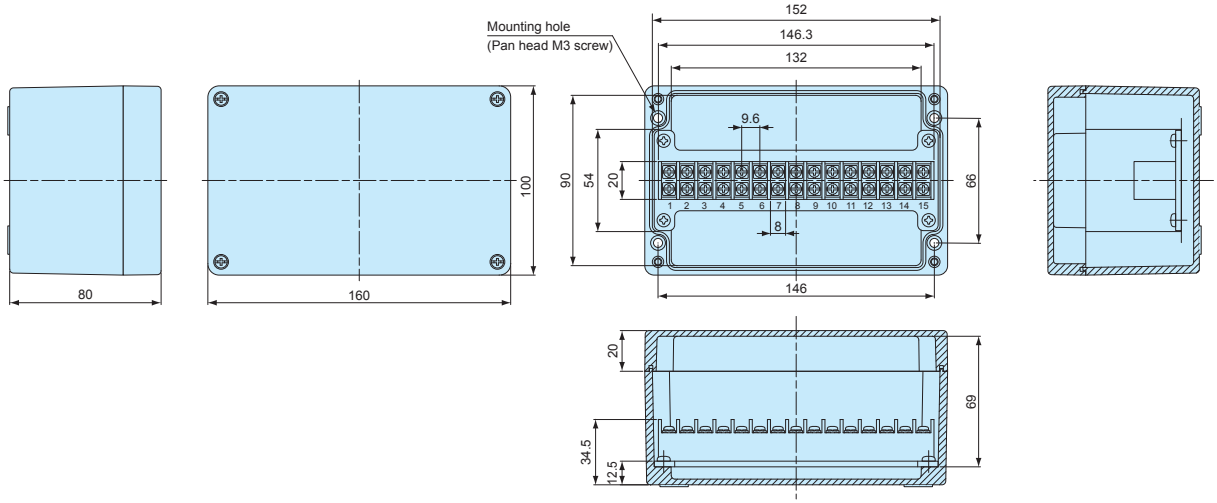

TMA-20P-AS

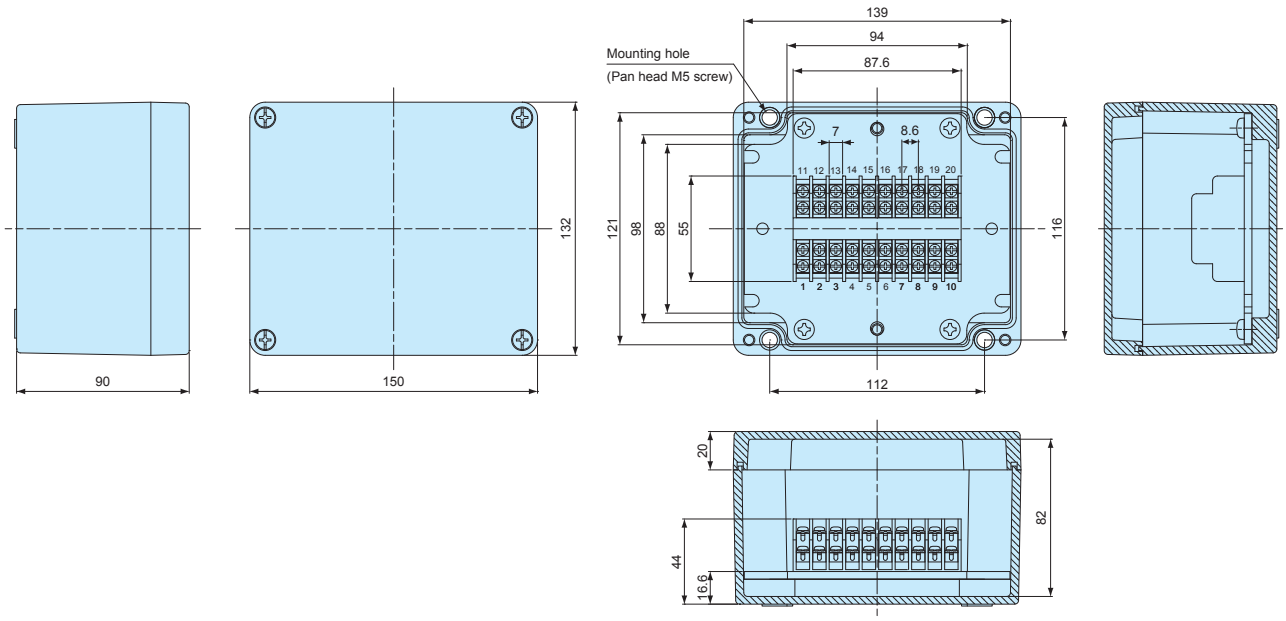

TMA-20P

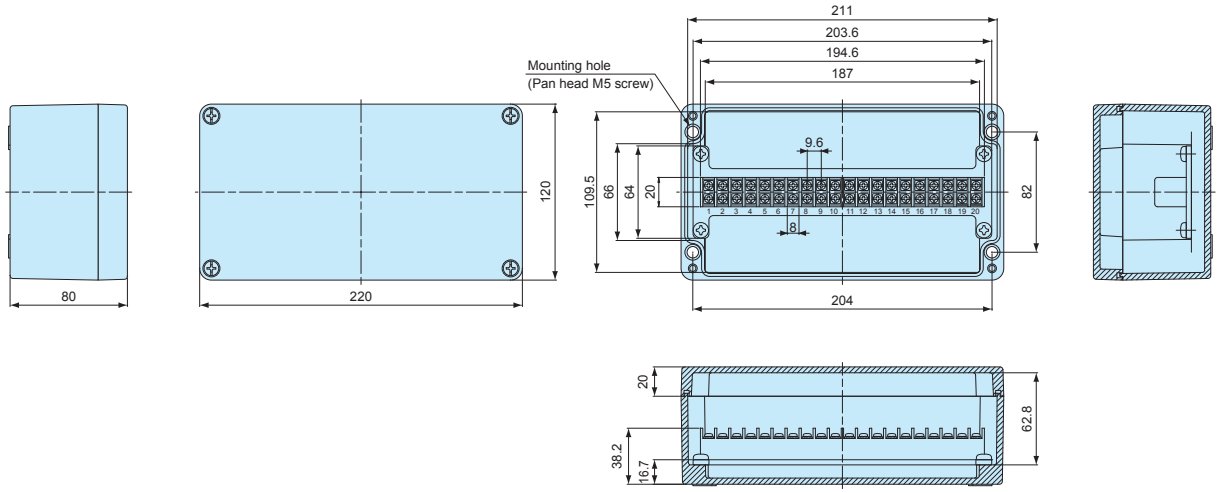

TMA-30P-AS

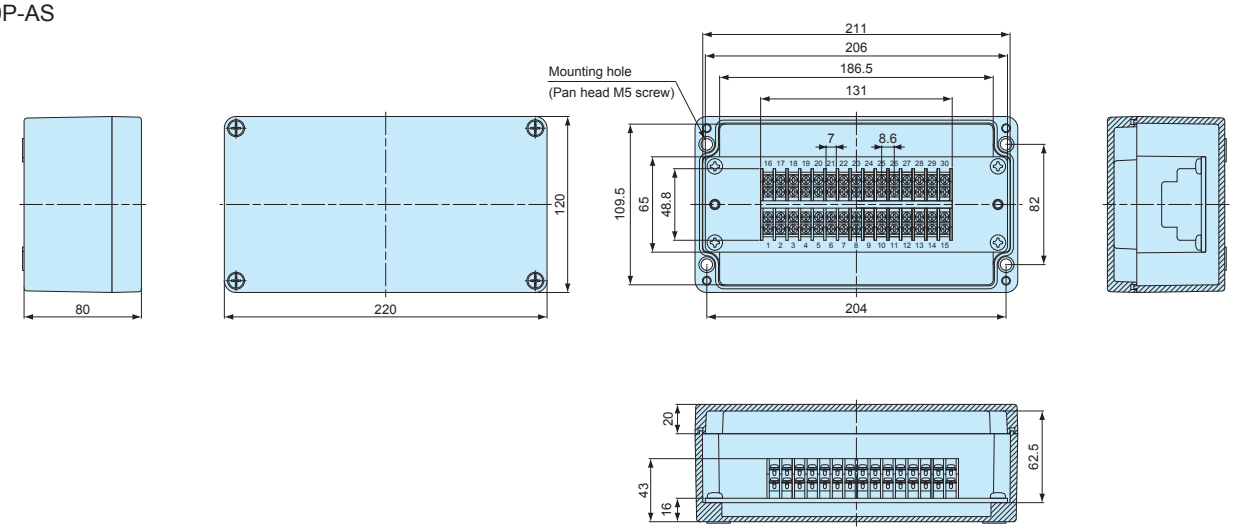

SBR SERIES SHORTING BAR

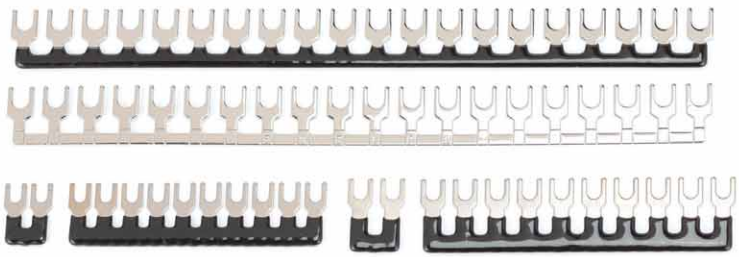

- Shorting bar for common-wiring.
- SBR70-10P, SBR85-10P, SBR95-20P, and SBR95-20N can be cut accordingly into required poles.
- PVC coated. SBR95-20 available in both PVC coated (SBR95-20P) and non PVC coated (SBR95-20N) models.
- See chart below for suitable box.

SBR70-2P

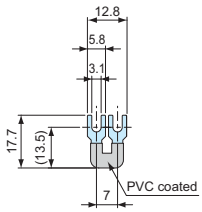

SBR70-10P

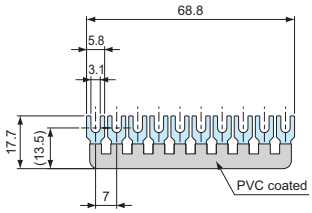

SBR85-2P

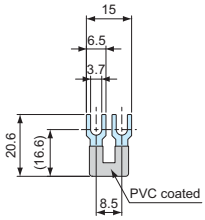

SBR85-10P

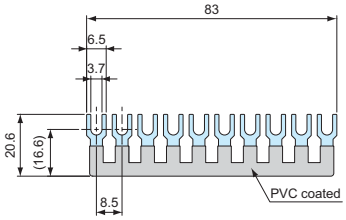

SBR95-20P

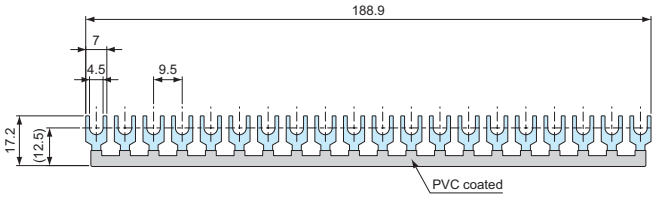

SBR95-20N

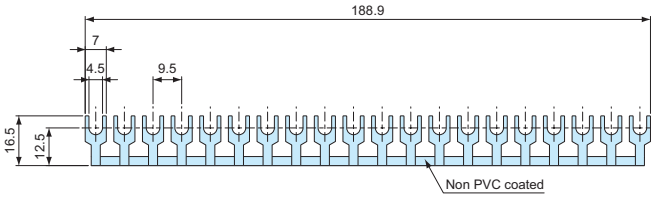

Suitable Box Chart

Product no.	Number of poles	Pole distance	Suitable box
SBR70 - 2P	2P	7.0mm	TMC series
SBR70 -10P	10P	7.0mm	TMC series
SBR85 - 2P	2P	8.6mm	TMB-20P, TMA-20P-AS, TMA30P-AS
SBR85 -10P	10P	8.6mm	TMB-20P, TMA-20P-AS, TMA30P-AS
SBR95 -20P	20P	9.6mm	TMA • TMB series (Not applicable for TMB-20P, TMA20P-AS, and TMA30P-AS models)
SBR95 -20N	20P	9.6mm	TMA • TMB series (Not applicable for TMB-20P, TMA20P-AS, and TMA30P-AS models)

Product no. / Feature

■ Pack quantity differs by models.

Product no.	Number of poles	Material	Finish	PVC coating	Pack of
SBR70 - 2P	2P	Brass	Nickel plated	Yes	10
SBR70 -10P	10P	Brass	Nickel plated	Yes	1
SBR85 - 2P	2P	Brass	Nickel plated	Yes	10
SBR85 -10P	10P	Brass	Nickel plated	Yes	1
SBR95 -20P	20P	Brass	Nickel plated	Yes	1
SBR95 -20N	20P	Brass	Nickel plated	No	1

RB-9 RUBBER BUSH

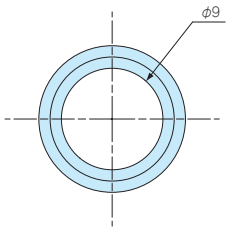

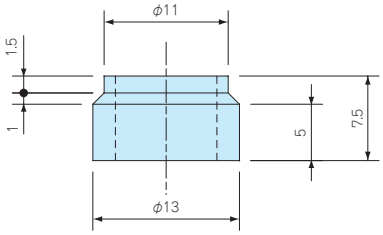

- Rubber bush for TMC series terminal junction box.
- Applicable for Φ8 ~ Φ9mm diameter cable.

Product no. / Feature

Product no.	Material	Color	Cable range	Pack of
RB-9	NBR	Black	Φ8 ~ Φ9mm	2

SZ SERIES WATERPROOF WASHER

- Waterproof washer for screwing onto waterproof boxes.
- NBR sealing material has superior oil resistance (N models only) .
- Silicone sealing material has wider operating temperature with superior temperature and water resistance (S models only).

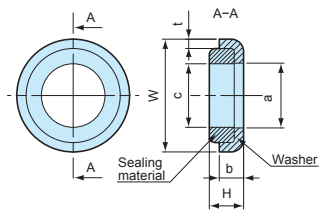

- Shape of the sealing material vary by product.

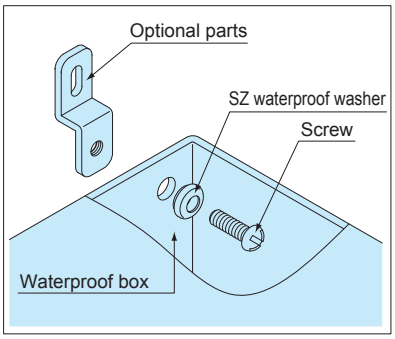

Technical Data

Water pressure resistance:
M3 ~ M10 : 200kg/cm^2 5min
M12 ~ M16 : 100kg/cm^2 5min

Product no. / Dimensions

Product no.	W	H	a	b	c	t	Washer material	Sealing material	Color	Screw size	Pack of
SZ- 3N	7	2.7	3.2	2.2	3.1	0.5	SUS304	NBR	Black	M 3	1
SZ- 3S	7	2.7	3.2	2.2	3.1	0.5	SUS304	Silicone	Brown	M 3	1
SZ- 4N	8	2.8	4.2	2.1	4.1	0.5	SUS304	NBR	Black	M 4	1
SZ- 4S	8	2.8	4.2	2.1	4.1	0.5	SUS304	Silicone	Brown	M 4	1
SZ- 5N	9.5	3.6	5.2	2.7	5.1	0.8	SUS304	NBR	Black	M 5	1
SZ- 5S	9.5	3.6	5.2	2.7	5.1	0.8	SUS304	Silicone	Brown	M 5	1
SZ- 6N	11.5	4	6.2	3	6.2	1	SUS304	NBR	Black	M 6	1
SZ- 6S	11.5	4	6.2	3	6.2	1	SUS304	Silicone	Brown	M 6	1
SZ- 8N	15.2	3.8	8.2	3.2	8.2	1	SUS304	NBR	Black	M 8	1
SZ- 8S	15.2	3.8	8.2	3.2	8.2	1	SUS304	Silicone	Brown	M 8	1
SZ-10N	18	5.3	10.2	4	10.2	1.5	SUS304	NBR	Black	M10	1
SZ-10S	18	5.3	10.2	4	10.2	1.5	SUS304	Silicone	Brown	M10	1
SZ-12N	24	6.1	14.2	4.8	12.2	1.5	SUS304	NBR	Black	M12	1
SZ-12S	24	6.1	14.2	4.8	12.2	1.5	SUS304	Silicone	Brown	M12	1
SZ-16N	30	6.8	18.4	5.3	16	1.9	SUS304	NBR	Black	M16	1
SZ-16S	30	6.8	18.4	5.3	16	1.9	SUS304	Silicone	Brown	M16	1

RMW series WEATHERPROOF CABLE GLAND

IP67

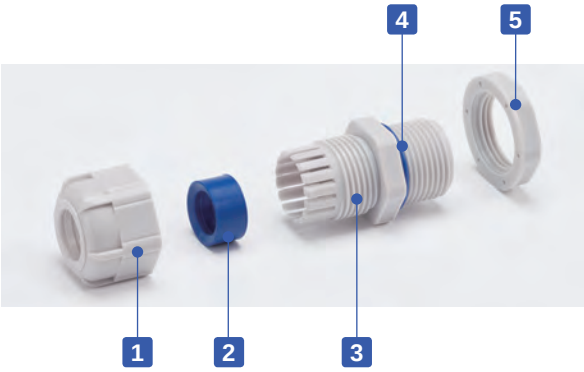

- Weatherproof cable gland equipped with high ultraviolet and degradation resistant silicone sealing insert and O-ring.
- Recommended to use outdoors where waterproofing is critical.
- IP67 protection class.

Components

■ PA = Polyamide

No.	Part name	Material
1	Cap	PA66 UL94V-2
2	Sealing insert	Silicone
3	Connector	PA66 UL94V-2
4	O-ring	Silicone
5	Lock nut	PA66 UL94V-2

RMW dimensions

■ DXF/DWG/PDF drawings available on our website.

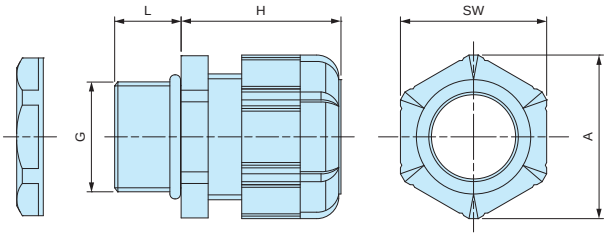

Technical Data

Protection class: IP67
Operating temperature: -20°C ~ +80°C

■ Lock nut is not included for RMW10S-6.
Please drill a proper thread hole into the enclosure for installation.

Product no. / Dimensions

Product no.		G		Cable range		L	H Max	SW	A	Pack of
● Black	● Light gray	Thread size	Mounting hole	Min	Max					
RMW8L-2.5B	RMW8L-2.5S	M8×1.25	Φ8.2	1	2.5	13	19.5	11.8	13.5	1
RMW8L-4B	RMW8L-4S	M8×1.25	Φ8.2	2.5	4	13	19.5	11.8	13.5	1
RMW10S-6B	RMW10S-6S	M10×1.5	—	3	6	8	20.5	13	14.4	1
RMW10L-6B	RMW10L-6S	M10×1.5	Φ10.2	3	6	13	20.5	13	14.4	1
RMW12S-7B	RMW12S-7S	M12×1.5	Φ12.2	3.5	7	9	20.5	16	17.6	1
RMW12L-7B	RMW12L-7S	M12×1.5	Φ12.2	3.5	7	14.5	20.5	16	17.7	1
RMW16S-8B	RMW16S-8S	M16×1.5	Φ16.2	4	8	9	23.5	19	21	1
RMW16L-8B	RMW16L-8S	M16×1.5	Φ16.2	4	8	15	24	19	21	1
RMW20S-12B	RMW20S-12S	M20×1.5	Φ20.2	6	12	10	29	24	26.2	1
RMW20L-12B	RMW20L-12S	M20×1.5	Φ20.2	6	12	15	28.5	24	26.2	1
RMW25L-17B	RMW25L-17S	M25×1.5	Φ25.2	11	17	15	35	33	36.2	1
RMW32L-21B	RMW32L-21S	M32×1.5	Φ32.3	13	21	15	38	36	39.5	1
RMW40L-27B	RMW40L-27S	M40×1.5	Φ40.3	18	27	18	43.5	45.7	50.5	1
RMW50L-38B	RMW50L-38S	M50×1.5	Φ50.4	27	38	20	50.5	60	66.5	1
RMW10L-6B-P	RMW10L-6S-P	M10×1.5	Φ10.2	3	6	13	20.5	13	14.4	100
RMW12S-7B-P	RMW12S-7S-P	M12×1.5	Φ12.2	3.5	7	9	20.5	16	17.6	100
RMW12L-7B-P	RMW12L-7S-P	M12×1.5	Φ12.2	3.5	7	14.5	20.5	16	17.7	100
RMW16S-8B-P	RMW16S-8S-P	M16×1.5	Φ16.2	4	8	9	23.5	19	21	100
RMW16L-8B-P	RMW16L-8S-P	M16×1.5	Φ16.2	4	8	15	24	19	21	100
RMW20S-12B-P	RMW20S-12S-P	M20×1.5	Φ20.2	6	12	10	29	24	26.2	100
RMW20L-12B-P	RMW20L-12S-P	M20×1.5	Φ20.2	6	12	15	28.5	24	26.2	100

RMW series silicone sealing insert weatherproof test report

Object: Cut into a piece of the silicone sealing insert from RMW series and attach it onto an aluminium plate.
For comparison, NBR sealing insert from our RM and EPDM sealing insert from another manufacturer is also attached for comparison purposes.

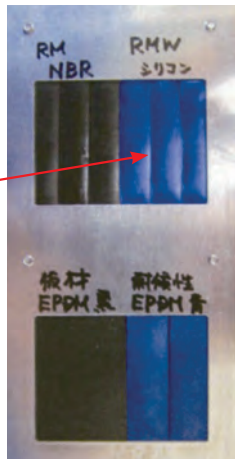

Before

After

Testing conditions

Equipment : 7.5kW Super Xenon Weather Meter SX75 (Suga Test Instruments Co., Ltd.- http://www.sugatest.co.jp/english/)
Conditions : JIS B7754 : 1991
Testing with an authorized Xenon arc lamp weathering test equipment under the conditions denoted below.
Irradiance : 180W/m^2 at 300-400nm
Black Panel Temperature : 63±3°C Humidity Range : 50±10%
Cycle Conditions : 120 minutes cycle (18 minutes irradiation + water spray - 102 minutes irradiation)
Time period : 2,000 hours (equivalent to a period of 4 years under natural conditions)
Total radiant exposure : 1296MJ/m^2

Test result (visual / touch inspection)

Silicone sealing insert material : No cracks, no gloss transition, no powder - no appearance change at all. Flexibility remains unchanged.

Before

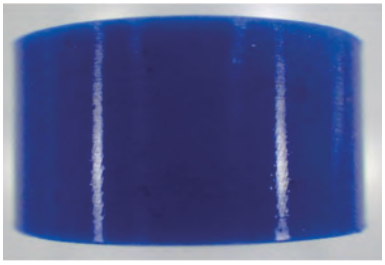

After

NBR material from our RM series : Lost glossiness on the surface and material is stiffened.

Before

After

EPDM material from weatherproof cable gland of another manufacturer : Cracked, color drastically faded and powder appeared on the surface.

Before

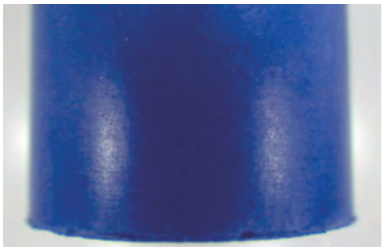

After

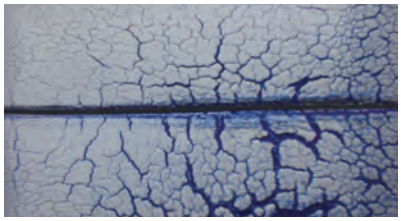

RM series POLYAMIDE CABLE GLAND

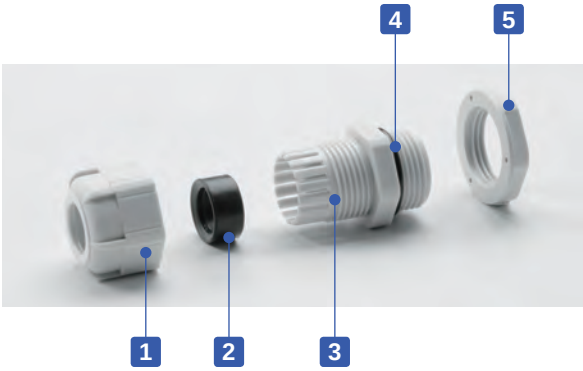

- Low cost cable glands made from polyamide material.
- Wide selection, for M8 ~ M63, suitable for Φ1mm ~ Φ44 mm cable.
- High oil resistant NBR rubber sealing and O-ring.
- IP67 protection class.

Components

■ PA = Polyamide

No.	Part name	Material
1	Cap	PA66 UL94V-2
2	Sealing insert	NBR
3	Connector	PA66 UL94V-2
4	O-ring	NBR
5	Lock nut	PA66 UL94V-2

RM dimensions

■ DXF/DWG/PDF drawings available on our website.

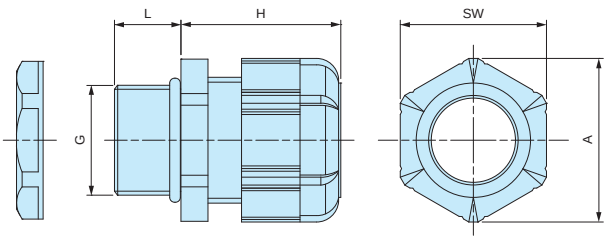

Technical Data

Protection class: IP67
Operating temperature: -20°C ~ +80°C

■ Lock nut is not included for RM8S-2.5, 8S-4, and 10S-6 models.
Please drill a proper thread hole into the enclosure for installation.

Product no. / Dimensions

Product no.		G		Cable range		L	H Max	SW	A	Pack of
● Black	● Light gray	Thread size	Mounting hole	Min	Max					
RM8S-2.5B	RM8S-2.5S	M8×1.25	—	1	2.5	7.5	19.5	11.8	13.5	1
RM8L-2.5B	RM8L-2.5S	M8×1.25	Φ8.2	1	2.5	13	19.5	11.8	13.5	1
RM8S-4B	RM8S-4S	M8×1.25	—	2.5	4	7.5	19.5	11.8	13.5	1
RM8L-4B	RM8L-4S	M8×1.25	Φ8.2	2.5	4	13	19.5	11.8	13.5	1
RM10S-6B	RM10S-6S	M10×1.5	—	3	6	8	20.5	13	14.4	1
RM10L-6B	RM10L-6S	M10×1.5	Φ10.2	3	6	13	20.5	13	14.4	1
RM12S-7B	RM12S-7S	M12×1.5	Φ12.2	3.5	7	9	20.5	16	17.6	1
RM12L-7B	RM12L-7S	M12×1.5	Φ12.2	3.5	7	14.5	20.5	16	17.7	1
RM16S-8B	RM16S-8S	M16×1.5	Φ16.2	4	8	9	23.5	19	21	1
RM16L-8B	RM16L-8S	M16×1.5	Φ16.2	4	8	15	24	19	21	1
RM20S-12B	RM20S-12S	M20×1.5	Φ20.2	6	12	10	29	24	26.2	1
RM20L-12B	RM20L-12S	M20×1.5	Φ20.2	6	12	15	28.5	24	26.2	1
RM25L-17B	RM25L-17S	M25×1.5	Φ25.2	11	17	15	35	33	36.2	1
RM32L-21B	RM32L-21S	M32×1.5	Φ32.3	13	21	15	38	36	39.5	1
RM40L-27B	RM40L-27S	M40×1.5	Φ40.3	18	27	18	43.5	45.7	50.5	1
RM50L-38B	RM50L-38S	M50×1.5	Φ50.4	27	38	20	50.5	60	66.5	1
RM63L-44B	RM63L-44S	M63×1.5	Φ63.4	37	44	20	53	68	75.5	1
RM10L-6B-P	RM10L-6S-P	M10×1.5	Φ10.2	3	6	13	20.5	13	14.4	100
RM12S-7B-P	RM12S-7S-P	M12×1.5	Φ12.2	3.5	7	9	20.5	16	17.6	100
RM12L-7B-P	RM12L-7S-P	M12×1.5	Φ12.2	3.5	7	14.5	20.5	16	17.7	100
RM16S-8B-P	RM16S-8S-P	M16×1.5	Φ16.2	4	8	9	23.5	19	21	100
RM16L-8B-P	RM16L-8S-P	M16×1.5	Φ16.2	4	8	15	24	19	21	100
RM20S-12B-P	RM20S-12S-P	M20×1.5	Φ20.2	6	12	10	29	24	26.2	100
RM20L-12B-P	RM20L-12S-P	M20×1.5	Φ20.2	6	12	15	28.5	24	26.2	100
RM25L-17B-P	RM25L-17S-P	M25×1.5	Φ25.2	11	17	15	35	33	36.2	100

RSP series STRAIN RELIEF CABLE GLAND

■ Strain relief cap protects cables by preventing it from bending beyond its limit and breaking.

Technical Data
Protection class : IP67 Operating temperature : -20°C ~ +80°C

RSP dimensions

■ DXF/DWG/PDF drawings available on our website.

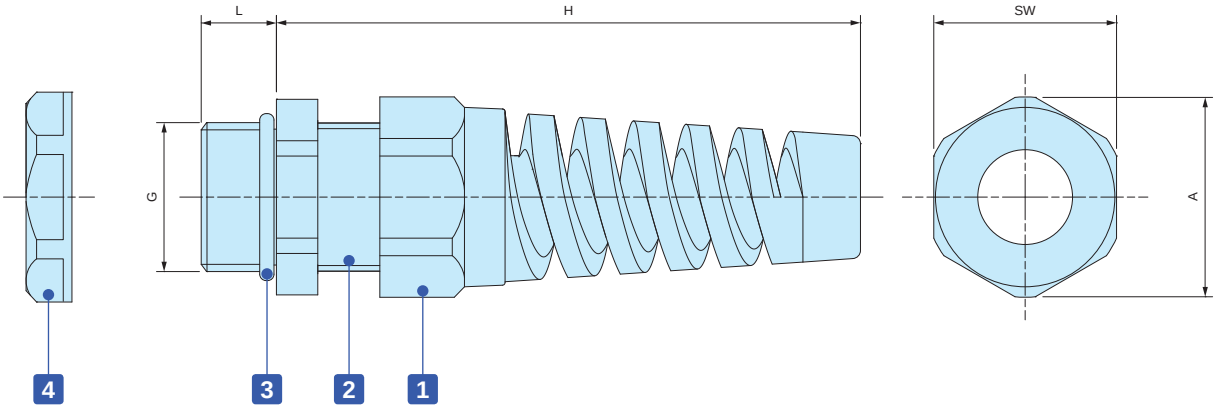

Components

No.	Part name	Material
1	Stain relief cap	PA66 UL94V-2
-	Sealing insert	NBR
2	Connector	PA66 UL94V-2
3	O-ring	NBR
4	Lock nut	PA66 UL94V-2

Product no. / Dimensions

Product no.		G		Cable range		L	H Max	SW	A	Pack of
● Black	● Light gray	Thread size	Mounting hole	Min	Max					
RSP12-6B	RSP12-6S	M12×1.5	Φ12.2	3.5	6	9	62	16	17	1
RSP16-8B	RSP16-8S	M16×1.5	Φ16.2	4	8	9	69	19.5	21	1
RSP20-11B	RSP20-11S	M20×1.5	Φ20.2	6	11	10	82	24	26	1
RSP25-16B	RSP25-16S	M25×1.5	Φ25.2	11	16	12	102	33	36	1

SP SERIES SEALING PLUG

SP dimensions

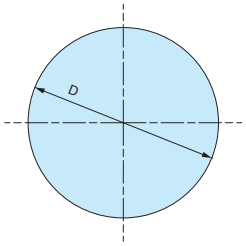

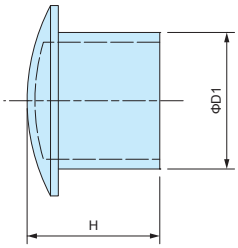

- Material : Nylon

- Sealing plug for cable glands when not in use.
- Maintain a waterproof seal when plugged into the sealing insert on cable glands.

Product no. / Dimensions

Product no.	D	D1	H	Suitable cable glands	Pack of
SP-12	10.2	6	15.5	RMW12, RM12, RMW16, RM16, RPG7, RPG9	10
SP-16	15.6	9.5	15.5	RMW20, RM20, RPG11, RPG13.5	10
SP-20	19.6	13.5	16.5	RPG16	10
SP-25	24.4	17.5	17	RMW25, RM25, RMW32, RM32, RPG21	5
SP-40	32.5	24.5	17.5	RMW40, RM40, RPG29	5
SP-50	47.2	38.9	17.6	RMW50, RM50	5

AG series HIGH WATER PROTECTION CABLE GLAND

- High water protection IP68 (1bar / 30min) polyamide cable gland.
- Wide selection, for M8 ~ M50, suitable for Φ2.5mm ~ Φ42 mm cable.
- Super tough and superior heat resistant PA6GF (glass fiber filled PA6) material on cap and connector.
- Safer halogen free, eco-friendly product.

Technical Data
Protection class: IP68 1bar / 30min Operating temperature: -20°C ~ +100°C Compliant with EN50262 Ver. A

AG series

Thicker sealing insert evenly hold a cable by having a larger holding area. Remains durable even after repeated tightening / loosening.

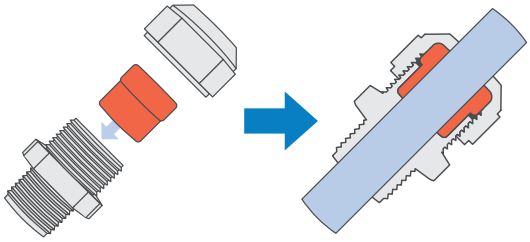

Lamellar insert type

If over-tightened, it can cause the rubber bush or cable to deform, which can allow water to seep in.

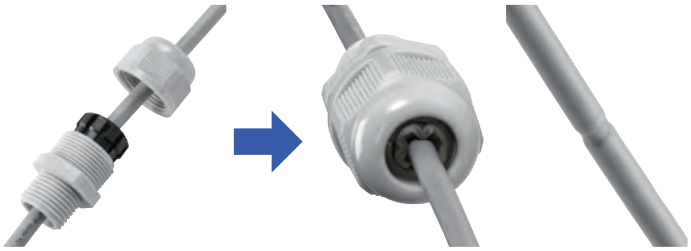

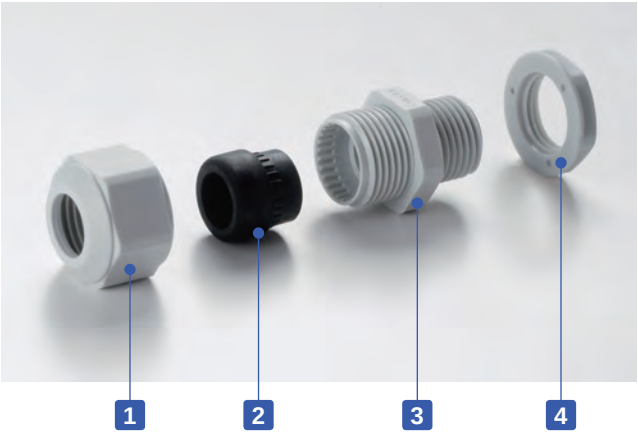

Components

■ PA6GF = Polyamide6 Glass Fiber Filled

No.	Part name	Material
1	Cap	PA6GF
2	Sealing insert	TPE
3	Connector	PA6GF
4	Lock nut	PA6

■ Lock nut is not included for M8 and M10 sizes.
Please drill a proper thread hole into the enclosure for installation.

■ Proper tightening torque varies by each cable diameter. Tighten the cap until top of the sealing insert forms a small bead between the cap and the cable.

- No optional sealing washer is required when installing on an even surface because of the built-in waterproof rib.

- An optional sealing washer is required when installing on an uneven surface. (See website for more information on the optional sealing washer)

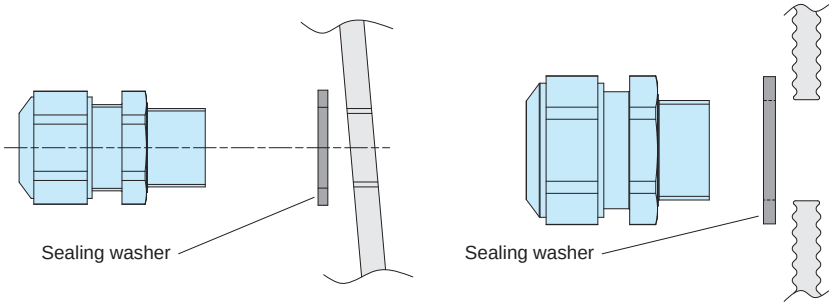

AG dimensions

- DXF/DWG/PDF drawings available on our website.

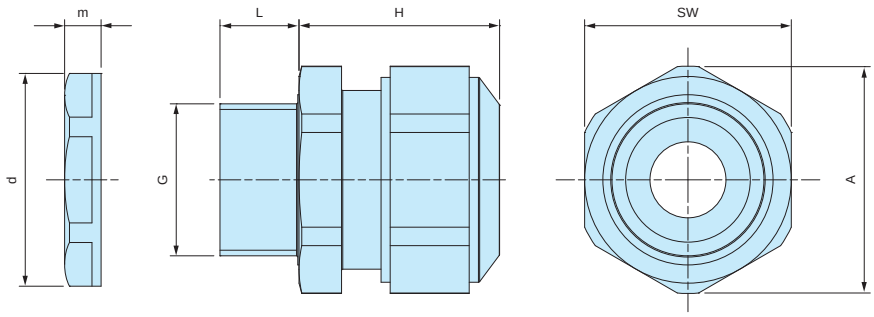

- Lock nut is not included for M8 and M10 sizes.
  Please drill a proper thread hole into the enclosure for installation.

Product no. / Dimensions

Product no.		G		Cable range		L	H Max	SW	A	d	m	Pack of
● Black	● Light gray	Thread size	Mounting hole	Min	Max							
AG8-3.5B	AG8-3.5S	M8×1.0	—	2.5	3.5	10	17	12	13.2	—	—	1
AG8-5B	AG8-5S	M8×1.0	—	3.5	4.7	10	17	12	13.2	—	—	1
AG10-6B	AG10-6S	M10×1.0	—	4	6	10	19	15	16.5	—	—	1
AG12-5B	AG12-5S	M12×1.5	Φ12.2	3.5	4.7	12	23.5	17	18.7	18.8	5	1
AG12-6.5B	AG12-6.5S	M12×1.5	Φ12.2	5	6.5	12	23	17	18.7	18.8	5	1
AG12-8B	AG12-8S	M12×1.5	Φ12.2	6.5	7.8	12	23	17	18.7	18.8	5	1
AG16-10B	AG16-10S	M16×1.5	Φ16.2	8	10	12	26	21	23.1	24.3	5	1
AG20-15B	AG20-15S	M20×1.5	Φ20.2	11	15	13	27	27	29.7	29	6	1
AG25-16B	AG25-16S	M25×1.5	Φ25.2	12.5	16	13	34	34	37.4	36	6.7	1
AG25-20B	AG25-20S	M25×1.5	Φ25.2	16	20	13	34	34	37.4	36	6.7	1
AG32-25.5B	AG32-25.5S	M32×1.5	Φ32.3	21	25.5	15	36	41	45.6	46	8	1
AG40-28.5B	AG40-28.5S	M40×1.5	Φ40.3	24	28.5	15	41	50	55.4	53.5	9	1
AG40-33B	AG40-33S	M40×1.5	Φ40.3	28.5	33	15	41	50	55.4	53.5	9	1
AG50-37B	AG50-37S	M50×1.5	Φ50.4	33	37	16	45	60	65.5	66	9.6	1
AG50-42B	AG50-42S	M50×1.5	Φ50.4	37	42	16	45	60	65.5	66	9.6	1

AGP SERIES SEALING WASHER for AG • AGSP

- Sealing washer for AG series.
- Made from oil resistant NBR material.
- Use in the case of installation on a rough or uneven surfaces.
- Selectable in 7 sizes (from M12 to M50)
- Sealing washer is not necessary for installation on flat surfaces.

AGP Dimensions

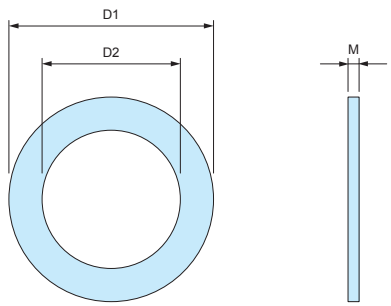

- Material : NBR

Product no. / Dimensions

Product no.	D1	D2	M	Suitable cable gland	Pack of
AGP-12	20	12	1.6	AG12	10
AGP-16	23.5	16.5	2.0	AG16	10
AGP-20	29	20	2.0	AG20	10
AGP-25	37	25	2.0	AG25	10
AGP-32	44	32	2.2	AG32	5
AGP-40	52	40	2.2	AG40	5
AGP-50	64	50	3.1	AG50	5

AGM series METAL CABLE GLAND

- High water protection IP68 (1bar / 30min) metal cable gland.
- Wide selection, for M6 ~ M50 and PG7 ~ PG16.
  Suitable for Φ2 mm ~ Φ42 mm cable.

Technical Data
Protection class: IP68 1bar / 30min Operating temperature: -40°C ~ +100°C Compliant with EN50262 Ver. A

AGM series

Thicker sealing insert evenly hold a cable by having a larger holding area. Remains durable even after repeated tightening / loosening.

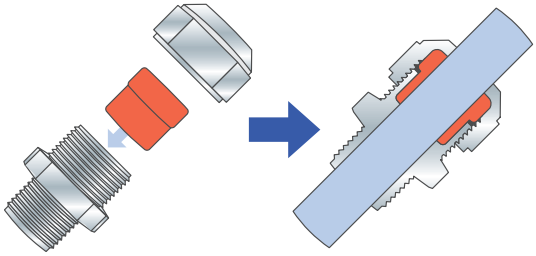

Lamellar insert type

If over-tightened, it can cause the rubber bush or cable to deform, which can allow water to seep in.

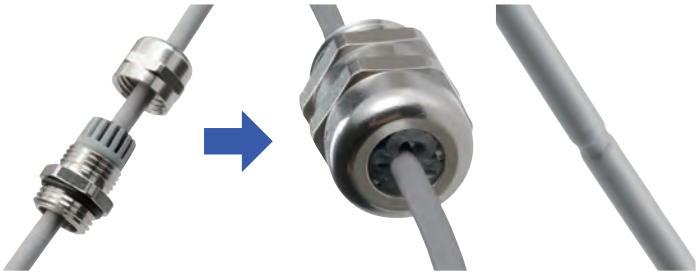

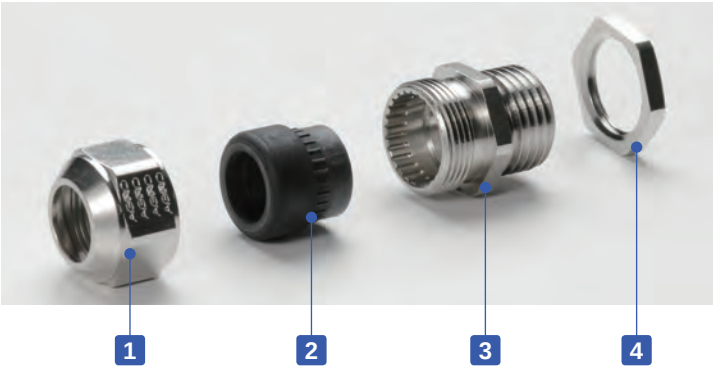

- Proper tightening torque varies by each cable diameter.
  Tighten the cap until top of the sealing insert forms a small bead between the cap and the cable.

Components

No.	Part name	Material	Color / Finish
1	Cap	Brass	Nickel plated
2	Sealing insert	TPE	Black
3	Connector	Brass	Nickel plated
-	O-ring	NBR	Black
4	Lock nut	Brass	Nickel plated

AGM dimensions

■ DXF/DWG/PDF drawings available on our website.

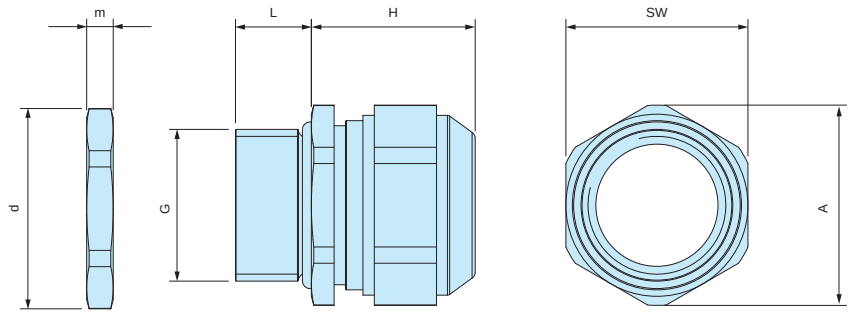

Product no. / Dimensions

Product no.	G			Cable range		L	H Max	SW	A	d	m	Pack of
	Thread size	Thread outer dia.	Mounting hole	Min	Max							
AGM6-2.5	M6×1.0	—	Φ6.2	2	2.5	8	12	8	9	10	2.8	1
AGM6-3	M6×1.0	—	Φ6.2	2.5	3.0	8	12	8	9	10	2.8	1
AGM6-3.5	M6×1.0	—	Φ6.2	3.0	3.5	8	12	8	9	10	2.8	1
AGM8-5	M8×1.25	—	Φ8.2	3.5	4.7	10	14	11	12	12	3	1
AGM10-6	M10×1.5	—	Φ10.2	4.0	6.0	10	15	13	14.3	14	2.8	1
AGM12-8	M12×1.5	—	Φ12.2	6.5	8.0	10	17	15	16.5	16.5	2.8	1
AGM16-10.5	M16×1.5	—	Φ16.2	8.0	10.5	10	21	18	20	21	3	1
AGM20-15	M20×1.5	—	Φ20.2	11.0	15.0	10	23	24	26.5	26.5	3.5	1
AGM25-20	M25×1.5	—	Φ25.2	16.0	20.0	11	28	30	33	33	4	1
AGM32-25.5	M32×1.5	—	Φ32.3	21.0	25.5	13	29.5	36	39.5	39.5	4	1
AGM40-28.5	M40×1.5	—	Φ40.3	24.0	28.5	13	32	46	50.7	51	5	1
AGM40-33	M40×1.5	—	Φ40.3	28.5	33.0	13	32	46	50.7	51	5	1
AGM50-37	M50×1.5	—	Φ50.4	33.0	37.0	14	34	55	59.7	60	5.5	1
AGM50-42	M50×1.5	—	Φ50.4	37.0	42.0	14	34	55	59.7	60	5.5	1

AGE SERIES EMC SHIELDED CABLE GLAND

- Optimal contact spring provides excellent shield contact and the smallest possible transfer impedance.
- Clawed lock nut makes a good EMC shield contact possible on conductive enclosures.
- Shape of the contact spring not only allows for a large clamping range to the shield but also enables easy and faster installation and re-installation.
- 2-piece detachable sealing inserts can be adapted to the wider existing cable diameter on site.
  (AGE12 available only with 1-piece sealing insert)

Technical Data

Protection class : IP68 2bar / 30min, IP69K
20m depth immersion in 30 minutes
Operating temperature : -60°C ~ +100°C
Compliant with IEC62444 Var. A

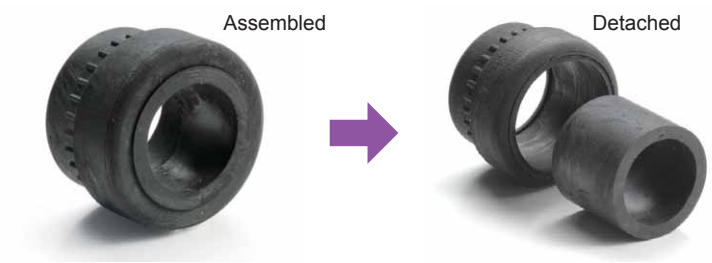

Cable Range

No.	Sealing insert type	
	Assembled	Detached
AGE16-10.5	Φ 6 ~ Φ 7.5	Φ 7.5 ~ Φ10.5
AGE20-15	Φ 8 ~ Φ10.5	Φ10.5 ~ Φ15
AGE25-20	Φ12.5 ~ Φ15	Φ15 ~ Φ20
AGE32-25	Φ17 ~ Φ20	Φ20 ~ Φ25

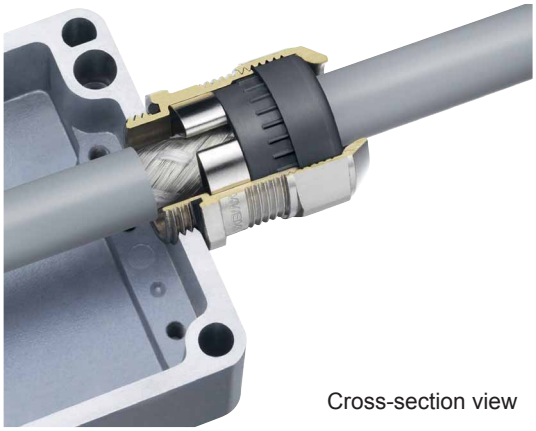

Cross-section view

Components

No.	Part name	Material	Color / Finish
1	Cap	Brass	Nickel plated
2	Sealing insert	TPE	Black
3	Connector	Brass	Nickel plated
4	Contact spring	Stainless steel	Unfinished
-	O-Ring	NBR	Black
5	Lock-nut	Brass	Nickel plated

INSTALLATION Instruction

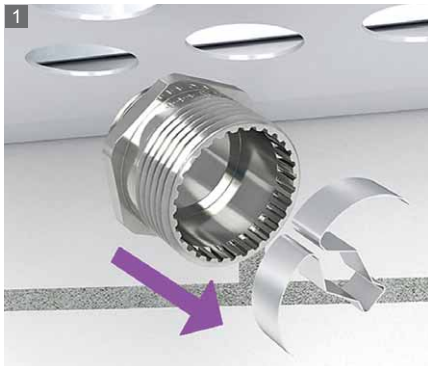

Remove the contact spring from the connector.

Install the connector onto the enclosure.

Strip the cable.

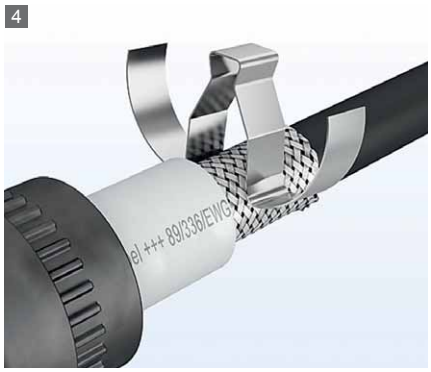

Clip the contact spring on the shielded cable.

Pass the cable through the Sealing insert and cap.

Tighten the cap to complete.

AGE dimensions

■ DXF/DWG/PDF drawings available on our website.

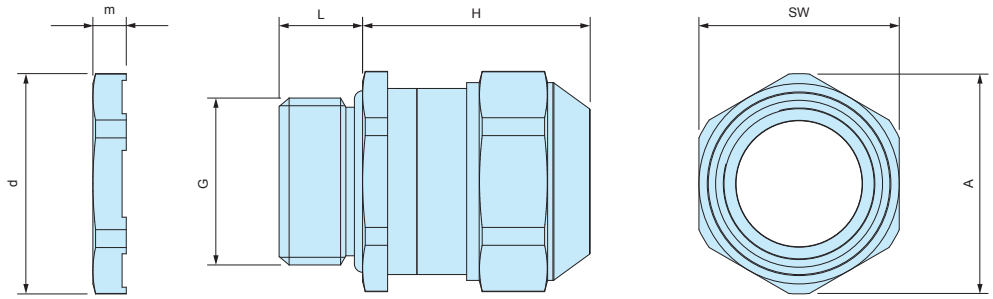

Product no. / Dimensions

Product no.	G		Cable range		L	H Max	SW	A	d	m	Pack of
	Thread size	Mounting hole	Min	Max							
AGE12-5	M12×1.5	Φ12.2	3.5	5.0	10	22	15	16.5	16.5	3.5	1
AGE12-6.5	M12×1.5	Φ12.2	5.0	6.5	10	22	15	16.5	16.5	3.5	1
AGE16-10.5	M16×1.5	Φ16.2	6.0	10.5	10	25	18	20	21	3.5	1
AGE20-15	M20×1.5	Φ20.2	8.0	15.0	10	27	24	26.5	26.5	4	1
AGE25-20	M25×1.5	Φ25.2	12.5	20.0	11	33	30	33	33	4	1
AGE32-25	M32×1.5	Φ32.3	17.0	25.0	13	34	36	39.5	39.5	5	1

AGH SERIES HEAT RESISTANT METAL CABLE GLAND

- Heat resistant sealing insert made of FPM material. Resistant up to 200°C
- IP68 1bar / 30min high performance waterproof cable gland.

Technical Data
Protection class : Protection class IP68 1bar / 30min 10m depth immersion in 30 minutes Operating temperature : -40°C ~ +200°C Compliant with EN50262 Var. A

AGH series

Thicker sealing insert evenly clasp onto the cable by having a larger area. Remains durable even after repeated tightening / loosening.

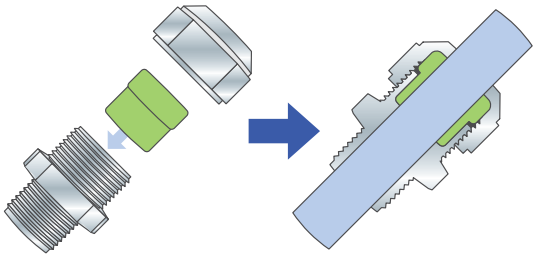

Conventional cable gland

If over-tightened, it can cause the rubber bush or cable to deform, which may allow water to seep in.

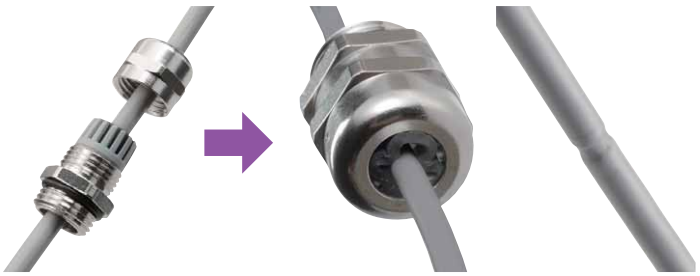

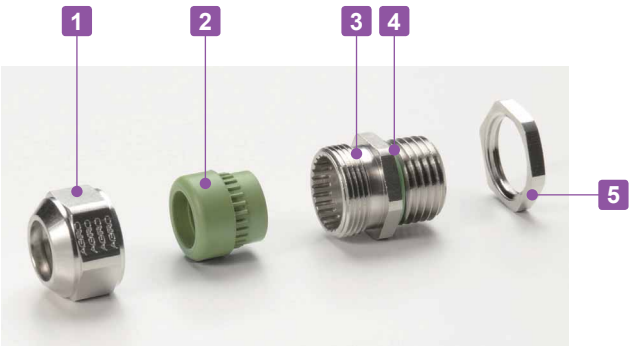

- Tightening torque varies depending on the cable diameter. Tighten until the sealing insert protrudes slightly from the cap.

Components

No.	Part name	Material	Color / Finish
1	Cap	Brass	Nickel plated
2	Sealing insert	FPM	Green
3	Connector	Brass	Nickel plated
4	O-Ring	FPM	Green
5	Lock-nut	Brass	Nickel plated

AGH dimensions

■ DXF/DWG/PDF drawings available on our website.

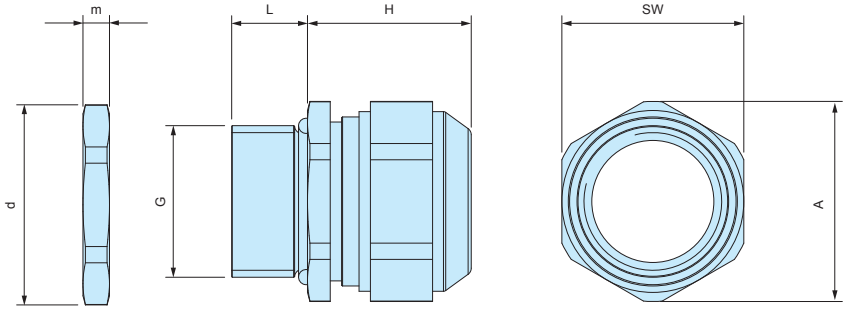

Product no. / Dimensions

Product no.	G		Cable range		L	H Max	SW	A	d	m	Pack of
	Thread size	Mounting hole	Min	Max							
AGH10-6	M10×1.5	Φ10.2	4.0	6.0	10	15	13	14.3	14.2	3	1
AGH12-8	M12×1.5	Φ12.2	6.5	8.0	10	17	15	16.5	16.5	3	1
AGH16-10.5	M16×1.5	Φ16.2	8.0	10.5	10	20	18	20	21	3	1
AGH20-15	M20×1.5	Φ20.2	11.0	15.0	10	23	24	26.5	26.3	3.5	1
AGH25-20	M25×1.5	Φ25.2	16.0	20.0	11	27	30	33	33	4	1
AGH32-25.5	M32×1.5	Φ32.3	21.0	25.5	13	28.5	36	39.7	39.7	4	1

PMF-6B SMALL PROTECTIVE VENT

NEW

IP68

Application example

- Small and screw-in protective vent suitable for compact, and hand-held type devices.
- IP68 protection class (water depth 2 meters / 60 mins) and -40°C ~ +150°C operating temperature range allows it to be used in various environments.
- Suitable for enclosures with capacities of 2.0 litres or under.
- For outdoor use, installation on the side of the enclosure unit is recommended.

PMF-6B dimensions

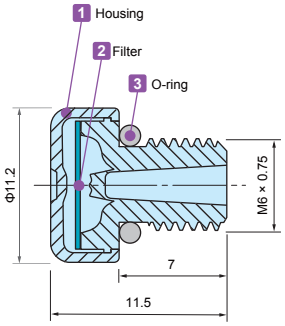

Hole milling drawings

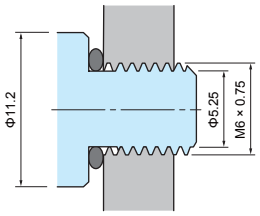

Installation drawings

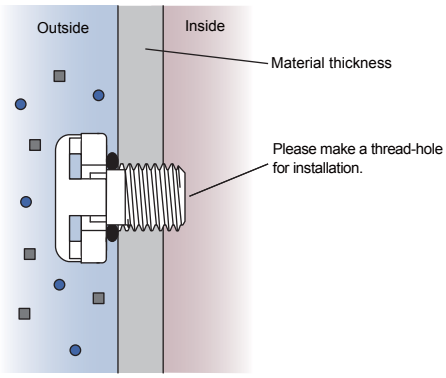

Technical Data

Airflow	300ml / min (dp = 7 kPa)
Recommended Torque	0.2 ~ 0.4 N • m
Certifications	IEC60529 (Protection class test) : IP66 • IP67 • IP68 IEC60068-2-1, 2, 14 (Heat resistance test) : -40°C ~ +150°C IEC60068-2-78 (Humidity test) : 85°C • 85% humidity • 1000 hours IEC60068-2-64 (Vibration test) UL94V-0 (Flame-resistant) • UL746C f1

Product no. / Dimensions

Product no.	Material			G	
● Black	1 Housing	2 Filter	3 O-ring	Thread size	Mount hole
PMF-6B	PA6 (Body) • PA66 (Cap)	PTFE	Silicone	M6 x 0.75	—

PMF-12M STAINLESS STEEL PROTECTIVE VENT

NEW

IP68 IP69K

- Stainless steel protective vent for superior durability and chemical resistance.
- IP68 protection class (water depth 2 meters / 60 mins) and -40°C ~ +125°C operating temperature range allows it to be used in various environments.
- Suitable for enclosures with capacities of 20 liters or under.
- For outdoor use, installation on the side of the enclosure unit is recommended.

PMF-12M dimensions

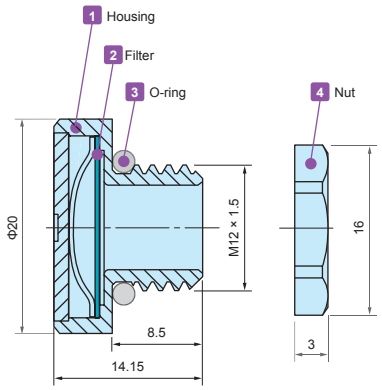

Hole milling drawings

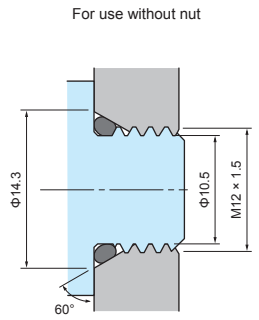

- While Φ12.2mm through-hole is sufficient for installation, 60° angle tapered hole is recommended to prevent deformation of the O-ring.

Installation drawings

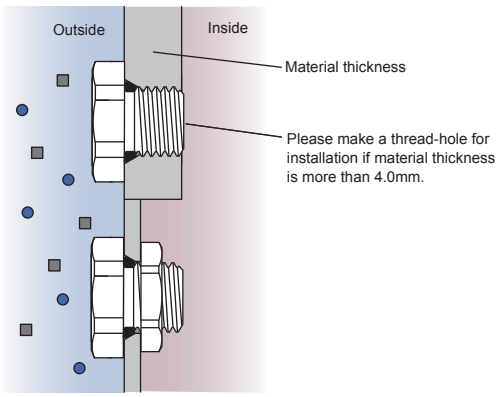

- If used with a lock nut, material thickness should not exceed 4.0mm.

Technical Data

Airflow	1600ml / min (dp = 7 kPa)
Recommended Torque	0.6 ~ 1.2 N • m
Certifications	IEC60529 (Protection class test) : IP66 • IP67 • IP68 • IP69K IEC60068-2-1, 2, 14 (Heat resistance test) : -40°C ~ +125°C IEC60068-2-78 (Humidity test) : 85°C • 85% humidity • 1000 hours IEC60068-2-64 (Vibration test)

Product no. / Dimensions

Product no.	Material				G		Nut SW
Metalic	1 Housing	2 Filter	3 O-ring	4 Nut	Thread size	Mount hole	
PMF-12M	Stainless steel	PTFE	Silicone	Brass • Nickel plated	M12 x 1.5	Φ12.2	15

PMF series PROTECTIVE VENT

Pressure Equalization / Ventilation

Application Example

- Protective vent protects the enclosure from deformation by equalizing internal and external pressure differences, as well as venting the gas generated within the enclosure.
- IP68 protection class (water depth 2 meters / 60 mins) with an operating temperature range -40°C ~ +125°C allows them to be used in harsh environments.
- PMF-6B model is suitable for enclosures with capacities of up to 2.0 liters. PMF-12 and PMF-12HS models are suitable for up to 5 and 50 liters respectively.
- Recommended to be installed at the sides of the enclosure.
- Use in industrial and electrical / electronic products only; not suitable to be used in medical, food and beverage, and cosmetic industries and related industrial equipment.

PMF dimensions

- DXF/DWG/PDF drawings available on our website.

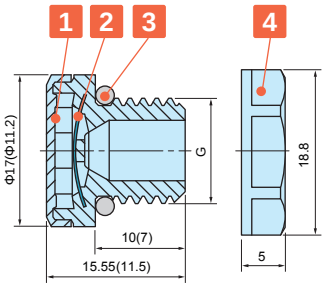

( ) values are for PMF-6B.
Lock nut is not available for PMF-6B

Hole milling drawings

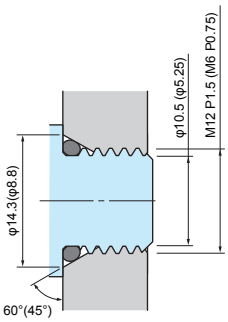

- Recommended for prevention of O-ring deformation during tightening.
  If tightened with a lock nut, a standard through-hole is sufficient for installation.

Installation drawings

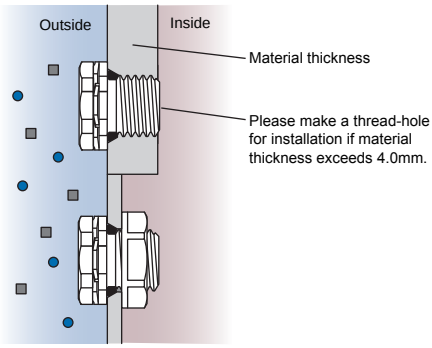

- If used with a lock nut, material thickness should not exceed 4.0mm.

Technical Data

Product no.	PMF-6B	PMF-12	PNF-12HA
Airflow	300ml / min (dp = 7kPa)	450ml / min (dp = 7kPa)	4,000ml / min (dp = 7kPa)
Recommended torque	0.2 ~ 0.4N • m	0.6 ~ 0.8N • m	0.6 ~ 0.8N • m
Certifications	IEC60529 (Protection class test) : IP65 • IP66 • IP67 • IP68 • IP69K (Not for PMF-6B) IEC60068-2-1, 2, 14 (Heat resistance test) : - 40°C ~ +125°C (~+150°C for PMF-6B) IEC60068-2-78 (Humidity test) : 85°C • 85% humidity • 1,000 hours IEC60068-2-11, 52 (Salt spray test) IEC60068-2-64 (Vibration test) GR-3108-CORE (Corrosive gas test) UL94V-0 (Flame-resistant) • UL746C f1		

Product no. / Dimensions

Product no.		Material				G		Lock nut SW
● Light gray	● Black	1 Housing	2 Filter	3 O-ring	4 Lock nut	Thread size	Mount hole	
—	PMF- 6B	PA6 / 66	PTFE	Silicone	—	M6 x P0.75	—	—
PMF-12S	PMF-12B	PA66 / 6	PTFE	Silicone	PA66 (UL94V-2)	M12 x P1.5	Φ12.2	17
PMF-12HAS	PMF-12HAB	PA66 / 6	PTFE	Silicone	PA66 (UL94V-2)	M12 x P1.5	Φ12.2	17

PMF-32S LARGE PROTECTIVE VENT

Pressure Equalization / Ventilation

IP68 IP69K

- Maintaining high airflow for large enclosures in an outdoor environment.
- Protective vent protects the enclosure from deformation by equalizing internal and external pressure differences, as well as venting the gas generated within the enclosure.
- Simple and flat design allows it to be used on a wide variety of enclosure types.
- IP68 protection class rated with an operating temperature range of -40°C ~ +125°C allows it to be used in harsh environments.
- Compliant with Solar industry testing IEC62108 standards.
- Recommended to be installed at the sides of the enclosure.
- Use in industrial and electrical / electronic products only; not suitable to be used in medical, food and beverage, and cosmetic industries and related industrial equipment.

PMF-32 dimensions

- DXF/DWG/PDF drawings available on our website.

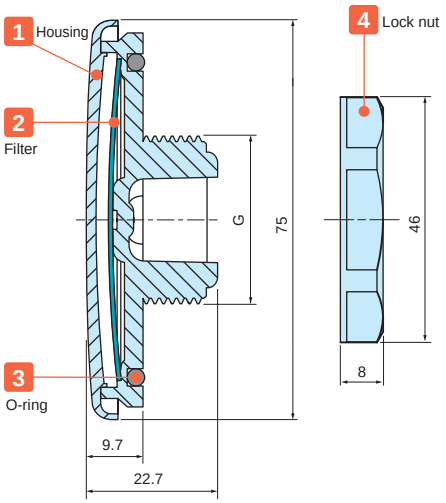

Hole milling drawings

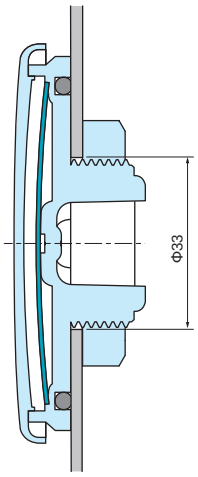

Installation drawings

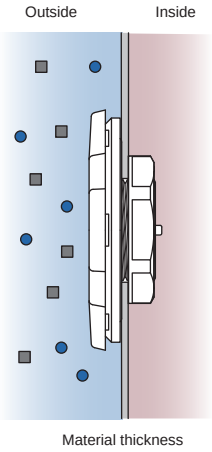

- If used with a lock nut, material thickness should not exceed 5.0mm.

Technical Data

Airflow	16ℓ / min (dp = 1.2kPa)
Recommended torque	5 N • m
Certifications	IEC529, 2nd (Protection class test) : IP66 • IP67 • IP68 • IP69K IEC60068-2-1, 2, 14 (Heat resistance test) : - 40°C ~ +125°C IEC60068-2-78 (Humidity test) : 85°C • 85% humidity • 1,000 hours IEC60068-2-11, 52 (Salt spray test) IEC60068-2-64 (Vibration test) IEC62108, 10.8 • 9 (Solar industry test) : Freezing • High temperature tes • Hail impact test GR-3108-CORE (Corrosive gas test) UL94V-0 (Flame-resistant) • UL746C f1

Product no. / Dimensions

Product no.	Material				G			Lock nut SW
	1 Housing	2 Filter	3 O-ring	4 Lock nut	Thread size	Thread diameter	Mount hole	
PMF-32S	Polycarbonate	PTFE	Silicone	PA66	M32 x P1.5	Φ32	Φ33	41.5

VE8 series ADHESIVE PROTECTIVE VENT FILTER NEW

Technical Data
Protection class : Dustproof IP6X Waterproof IPX4, IPX7 Airflow: 3,300ml/min/cm2 (at 7Kpa) Operating temperature: -40°C ~ +100°C

- Improved airflow of 3,300ml/min/cm2 as compared to previous VSC series.
- Vent filter protects the enclosure from deformation by equalizing internal and external pressure differences, as well as venting the gas generated within the enclosure.
- Allows water vapor molecules to diffuse through the microporous membrane.
- Highly water and oil repellent membrane protects electronic components from water, corrosive liquids, salts and dust.
- Easy installation adhesive filter.
- Recommended to be adhered onto flat plastic or metallic surfaces.

CAUTION

- Install only on the inner surface of the case / box with the membrane and adhesive side facing outwards.
- An initial period of 24 hours is required for the adhesive to properly bond to the surface. Avoid using the vent filter with a heavy load.
- Please do not adhere onto the top-side of enclosures. Rain water etc. will collect on the filter, which will weaken the adhesive seal and prevent proper ventilation.
- After degreasing and cleaning, adhere the filter without touching the center part of the vent filter.
- Use in industrial and electrical / electronic products only; not suitable to be used in medical, food and beverage, and cosmetic industries and related industrial equipment.

VE8 drawings

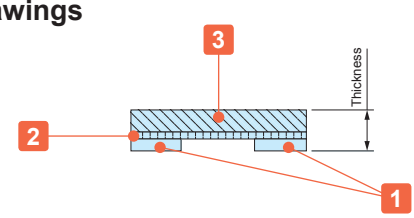

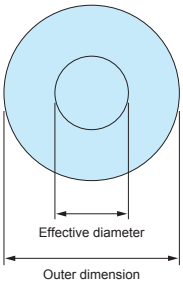

Installation drawings

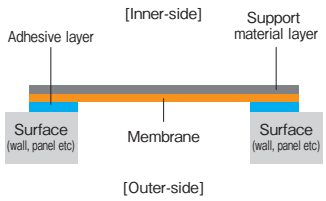

Adhesive type protective vent filter can be installed on any flat surface.

Components

No.	Part name	Material	Color
1	Adhesive	Acrylic adhesive	Transparent
2	Filter	ePTFE (Oil-repellent type)	White
3	Support material	Polyester fabric	White

Product no. / Dimensions

Product no.	Outer dimension (Φ·mm)	Effective diameter (Φ·mm)	Thickness (mm)	Sales unit
VE80308	7.6	3.3	0.26	8 pcs (per pack)
VE80814	14.0	8.0	0.26	4 pcs (per pack)
VE81221	21.5	12.5	0.26	4 pcs (per pack)
NEW VE82029S	29.0	20.0	0.35	2 pcs (per pack)
VE80308-S	7.6	3.3	0.26	96 pcs (per sheet)
VE80814-S	14.0	8.0	0.26	56 pcs (per sheet)
VE81221-S	21.5	12.5	0.26	20 pcs (per sheet)
NEW VE82029S-S	29.0	20.0	0.35	10 pcs (per sheet)

VSC SERIES ADHESIVE PROTECTIVE VENT FILTER

Technical Data
Water Entry Pressure (WEP): ≧ 20.0kPa Airflow: 450cc/cm^2 • min at 1.29Kpa

- Prevents ingression of a variety of contaminants, such as water, dust and other particles.
- Allows water vapor molecules to diffuse through the microporous membrane.
- Recommended to be adhered onto flat plastic or metallic surfaces.

NOTE

- Surface must be wiped dry before adhering.
- An initial period of a few hours is required for the adhesive to properly bond to the surface.
- Please do not adhere onto the top-side of enclosures. Rain water etc will collect on the filter, which will weaken the adhesive seal and prevent ventilation.

Drawing

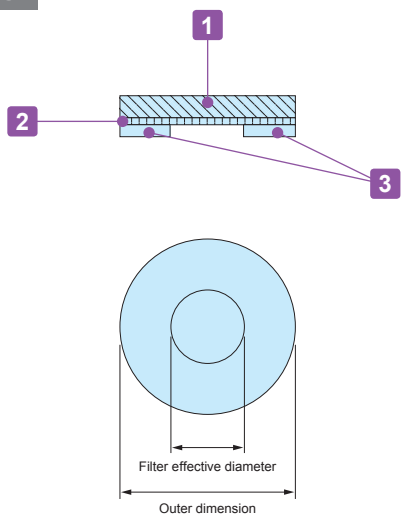

Installation drawing

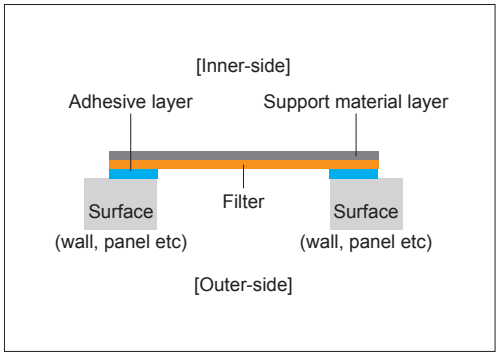

Components

No.	Part name	Material	Color
1	Adhesive	Acrylic adhesive	Transparent
2	Filter	PTFE	White
3	Support material	Polyester fabric	White

Product no. / Dimensions

Product no.	Outer dimension (Φ)	Filter effective diameter (Φ)	Thickness	Sales unit
VSC075	7.5	4.0	0.35	5 pcs (per pack)
VSC130	13.0	8.0	0.35	4 pcs (per pack)
VSC240	24.0	16.0	0.35	4 pcs (per pack)
VSC075-S	7.5	4.0	0.35	100 pcs (per sheet)
VSC130-S	13.0	8.0	0.35	56 pcs (per sheet)
VSC240-S	24.0	16.0	0.35	20 pcs (per sheet)

CNC MACHINING

CNC milling is a form of computer controlled machining. Similar in operation to drilling and cutting, it is able to create various hole styles and shapes by using a rotating cutting tool to bore into the object.

Extruded aluminium

- Mainly used for plastic, aluminium die-cast, and aluminium extrusion material types.
- Able to perform milling for various shapes and sizes.
- Recommended for small quantity customization.

Aluminium sheet

Diecast aluminium

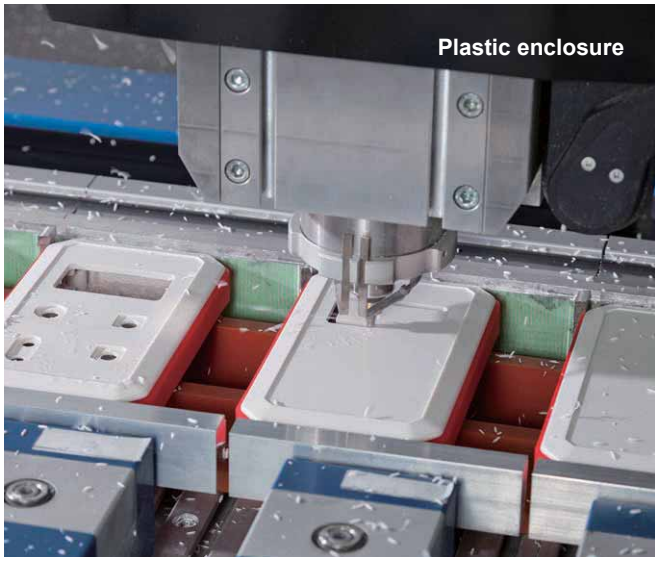
Plastic enclosure

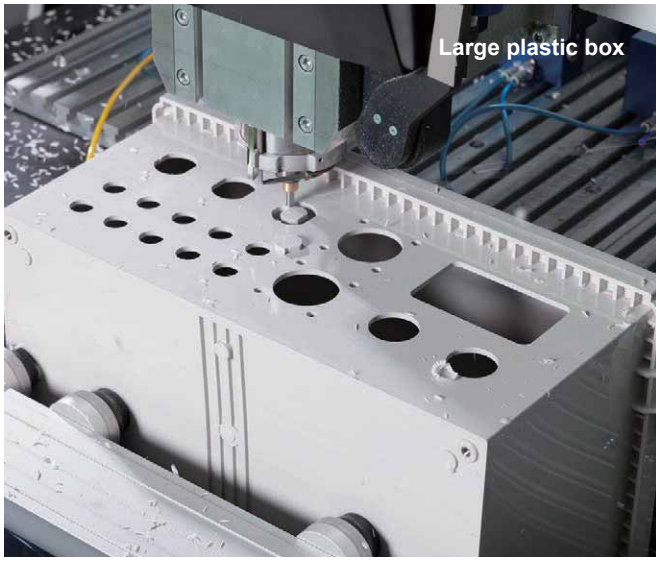
Large plastic box

ENGRAVING

By having the drill-head slightly milling the surface, the engraving of fine text or complex designs is able to be performed on a variety of surfaces, be it flat, curved, and so on.
Suitable for small batch print, and/or simple lettering. Font shall be similar to VAG Rounded font type.

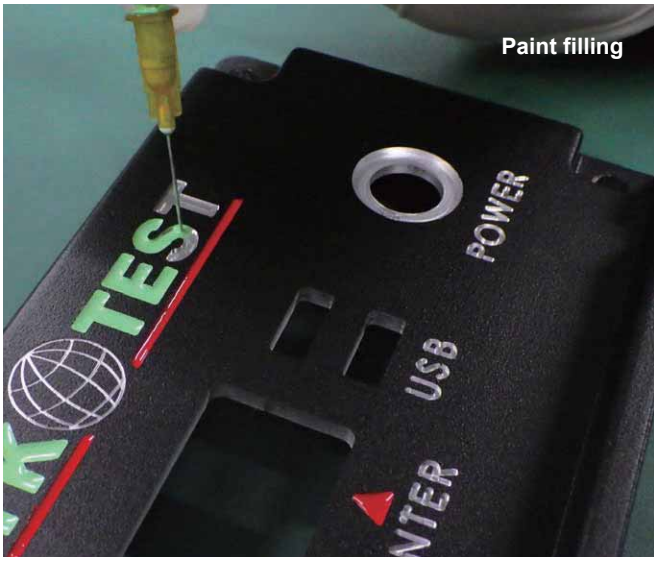

INKJET PRINTING

Full color digitally designed image can be printed in 1 run.
No cost difference regardless of the number of colors used.

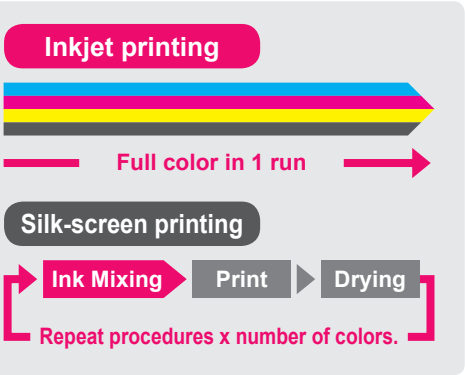

Low printing cost

Full color print possible in small quantities

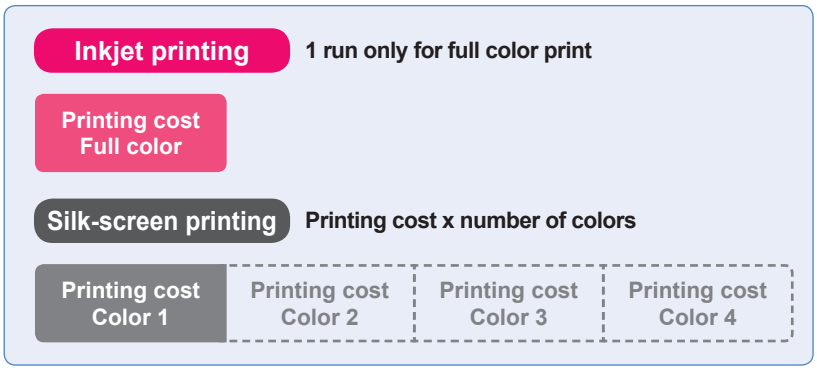

High quality printing of photo image and color gradation.

Print photo images in maximum 1,800 x 1,800 dpi quality.
Pictures, logos and unique designs with color gradation can be recreated in a high quality print.

Maximum printable enclosure size

D 420mm × W 594mm × H 270mm

Printable on surfaces with height differential

Printing is possible on recessed, sloped and rounded sections.

Gap difference is less than 2.0mm.

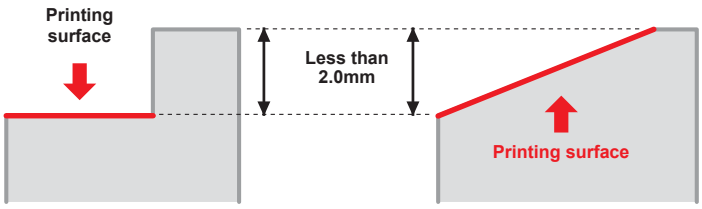

*Not suitable if height difference is more than 2.0mm.

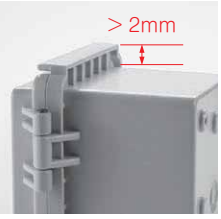

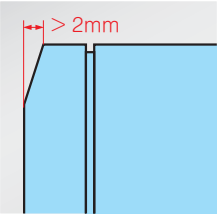

Printed example