# MULTI-FUNCTION EXTRUDED ALUMINIUM CASE

## EXPT • EXP • EXPE • EXW • EXPF • EXEF • EXWF series

**The following series, by utilizing similar extrusion frames, are available in 7 different types, such as having IP65, or EMC shielded functions, among others.**
**73 different sizes are available for each version.**

### CORNER GUARD

EXP series Page 203 ~ 204

### FLANGED

EXPF series Page 209 ~ 210

### IP65 CORNER GUARD

EXW series Page 207 ~ 208

### IP65 FLANGED

EXWF series Page 213 ~ 214

### EMC CORNER GUARD

EXPE series Page 205 ~ 206

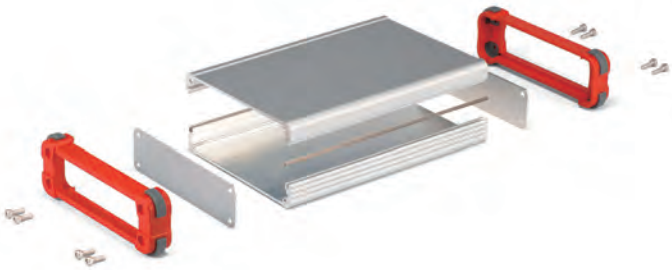

### EMC FLANGED

EXEF series Page 211 ~ 212

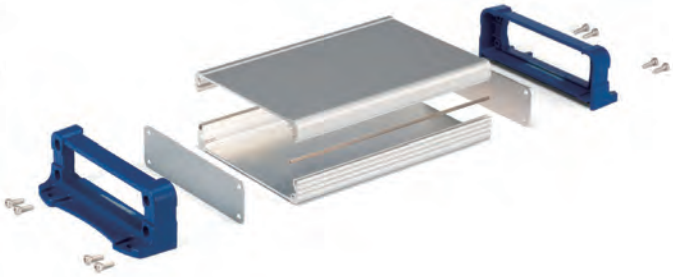

### WITH TILT LEG

EXPT series Page 201 ~ 202

**Custom length available in 1mm intervals**

# 16 COLOR COMBINATIONS

**EXP series is available in 2 different body frame and 8 different exterior frame colors for a total of 16 different color types.**

# APPLICATION EXAMPLE

## Measuring Instrument

Accessories (Optional parts)
Tilt leg TLW series
See page 222

## Network / Communication Box

## Controller

## Ultrasonic Thickness Gauge

Product by NOVOTEST (Ukraine)

## Radio Communication Tester

Product by RFNetworks (Japan)

## Tank Gauging System Interface Unit

Product by Tokyo Keiso (Japan)

## Fiber Laser Projector

Product by NEOARK (Japan)

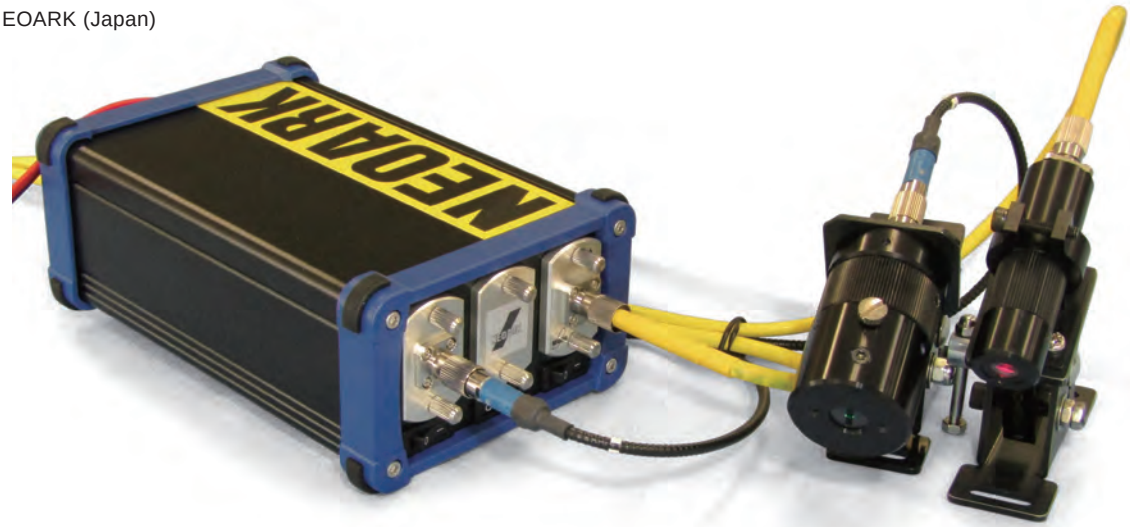


## Desktop Load Cell Amplifier

Product by IMADA (Japan)

## Magnet Elongation Measurement System

Product by Taikou Testing Equipment Industry (Japan)

## Peristaltic DC Pump

Product by Technic (USA)

## Multi-Show Controller

Product by Kuwatec (Japan)

# EXW series IP65 ALUMINIUM CASE with CORNER GUARD

- IP65 is made possible by the sealing of between top & bottom covers and end panels with gaskets.
- Available in 39 different sizes and 6 different color combinations by 2 body frame and 3 end panel colors.
- Custom length is available.

| Technical Data |
|---|
| Protection class : IP65<br>■ Not suitable for environments with direct rainfall. |

Included screws
EXW7-□, 9-□ models : M2.5-8 x 8 pcs
EXW12-□, 15-□ models: M3-10 x 8 pcs
※Hexagonal wrench included.

## Components

| No. | Part name | Pcs | Material | Color / Finish |
|---|---|---|---|---|
| 1 | Panel | 2 | PC+ABS Flame-resistant | Black • Gray / Unpainted<br>Navy / Painted |
| 2 | Top cover | 1 | Extruded aluminium A6063S-T5 | Silver • Black / Anodized with clear coating |
| 3 | Bottom cover | 1 | Extruded aluminium A6063S-T5 | Silver • Black / Anodized with clear coating |
| 4 | Panel gasket | 2 | Silicone | Charcoal gray* |
| 5 | Cover gasket | 2 | Silicone sponge | White gray |
| 6 | Screw (Hexagonal) | 8 | Stainless steel | Unfinished |

*Dark gray and black color panel gasket will be changed to charcoal gray upon depletion of inventory.

■ See page 217 ~ 220 for Top / Bottom cover dimensions

## Color Type

| Code | SB Silver / Black | SG Silver / Gray | SN Silver / Navy |
|---|---|---|---|
| Color | | | |
| **Code** | **BB Black / Black** | **BG Black / Gray** | **BN Black / Navy** |
| Color | | | |

## EXW dimensions

■ DXF/DWG/PDF/STP drawings available on our website.
※c = Top / Bottom cover length.

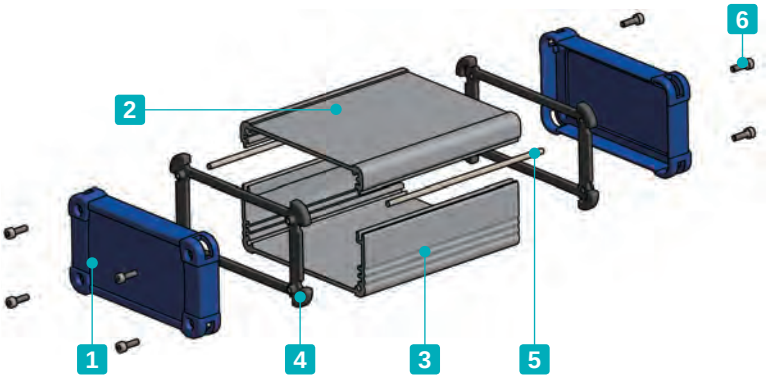


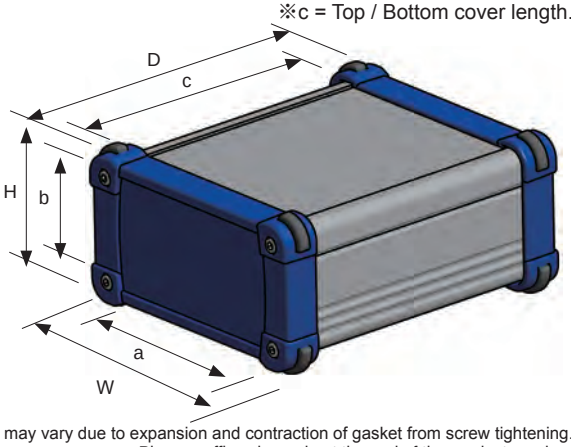


### Product no. / Dimensions

■ Listed D dimension may vary due to expansion and contraction of gasket from screw tightening.
■ Please suffix color code at the end of the product number.

| Product no. | External dimensions | | | Internal dimensions | | |
|---|---|---|---|---|---|---|
| | W | H | D | a | b | c |
| EXW 7- 3- 6□□ | 69 | 34 | 57 | 47 | 20 | 46 |
| EXW 7- 3- 9□□ | 69 | 34 | 84 | 47 | 20 | 73 |
| EXW 7- 3-11□□ | 69 | 34 | 107 | 47 | 20 | 96 |
| EXW 7- 4- 6□□ | 69 | 44 | 57 | 47 | 30 | 46 |
| EXW 7- 4- 9□□ | 69 | 44 | 84 | 47 | 30 | 73 |
| EXW 7- 4-11□□ | 69 | 44 | 107 | 47 | 30 | 96 |
| EXW 7- 6- 6□□ | 69 | 59 | 57 | 47 | 45 | 46 |
| EXW 7- 6- 9□□ | 69 | 59 | 84 | 47 | 45 | 73 |
| EXW 7- 6-11□□ | 69 | 59 | 107 | 47 | 45 | 96 |
| EXW 9- 4- 7□□ | 89 | 39 | 68 | 67 | 25 | 56 |
| EXW 9- 4-10□□ | 89 | 39 | 98 | 67 | 25 | 86 |
| EXW 9- 4-13□□ | 89 | 39 | 128 | 67 | 25 | 116 |
| EXW 9- 5- 7□□ | 89 | 49 | 68 | 67 | 35 | 56 |
| EXW 9- 5-10□□ | 89 | 49 | 98 | 67 | 35 | 86 |
| EXW 9- 5-13□□ | 89 | 49 | 128 | 67 | 35 | 116 |
| EXW 9- 6- 7□□ | 89 | 64 | 68 | 67 | 50 | 56 |
| EXW 9- 6-10□□ | 89 | 64 | 98 | 67 | 50 | 86 |
| EXW 9- 6-13□□ | 89 | 64 | 128 | 67 | 50 | 116 |
| EXW12- 4- 9□□ | 116 | 41 | 87 | 89 | 24 | 74 |
| EXW12- 4-13□□ | 116 | 41 | 127 | 89 | 24 | 114 |
| EXW12- 4-18□□ | 116 | 41 | 173 | 89 | 24 | 160 |
| EXW12- 6- 9□□ | 116 | 56 | 87 | 89 | 39 | 74 |
| EXW12- 6-13□□ | 116 | 56 | 127 | 89 | 39 | 114 |
| EXW12- 6-18□□ | 116 | 56 | 173 | 89 | 39 | 160 |
| EXW12- 7- 9□□ | 116 | 71 | 87 | 89 | 54 | 74 |
| EXW12- 7-13□□ | 116 | 71 | 127 | 89 | 54 | 114 |
| EXW12- 7-18□□ | 116 | 71 | 173 | 89 | 54 | 160 |
| EXW15- 5-11□□ | 151 | 46 | 106 | 107 | 29 | 93 |
| EXW15- 5-15□□ | 151 | 46 | 146 | 107 | 29 | 133 |
| EXW15- 5-20□□ | 151 | 46 | 196 | 107 | 29 | 183 |
| EXW15- 6-11□□ | 151 | 61 | 106 | 107 | 44 | 93 |
| EXW15- 6-15□□ | 151 | 61 | 146 | 107 | 44 | 133 |
| EXW15- 6-20□□ | 151 | 61 | 196 | 107 | 44 | 183 |
| EXW15- 8-11□□ | 151 | 81 | 106 | 107 | 64 | 93 |
| EXW15- 8-15□□ | 151 | 81 | 146 | 107 | 64 | 133 |
| EXW15- 8-20□□ | 151 | 81 | 196 | 107 | 64 | 183 |
| EXW15-10-11□□ | 151 | 101 | 106 | 107 | 84 | 93 |
| EXW15-10-15□□ | 151 | 101 | 146 | 107 | 84 | 133 |
| EXW15-10-20□□ | 151 | 101 | 196 | 107 | 84 | 183 |

■ Custom length is available

### How to install cover gaskets

■ Insert cover gaskets into the joint-grooves on both sides of the bottom cover.

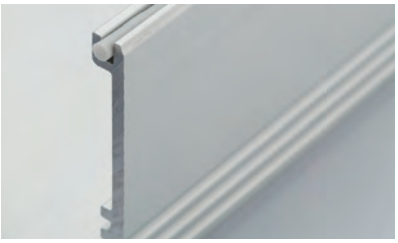

■ Ensure that a small portion of the cover gaskets protrude out in order to maintain connections with the end panels.

# EXWF series IP65 FLANGED ALUMINIUM CASE

NEW SIZE

IP65 IP54

- Waterproof case available in 73 different sizes and 6 different color combinations.
- Equipped with flanged frame for easy wall mounting. Suitable to be used as wall mounted controller and transmitter.
- Custom length is available.

**Technical Data**

Protection class : IP65 • IP54
Protection class varies by size.
■ Not suitable for environments with direct rainfall.

Included screws
EXWF7-□, 9-□ models : M2.5-8 x 8 pcs
EXWF11-□, 15-□ models : M3-10 x 8 pcs
EXWF20-□ models : M4-12 x 8 pcs
EXWF24-□, 30-□ models : M5-12 x 8 pcs
※Hexagonal wrench included.

## Components

■ See page 217 ~ 220 for Top / Bottom cover dimensions.

| No. | Part name | Pcs | Material | Color / Finish |
|---|---|---|---|---|
| 1 | Flanged end panel | 2 | PC+ABS Flame-resistant | Black • Gray / Unpainted<br>Navy / Painted |
| 2 | Top cover | 1 | Extruded aluminium A6063S-T5 | Silver • Black / Anodized with clear coating |
| 3 | Bottom cover | 1 | Extruded aluminium A6063S-T5 | Silver • Black / Anodized with clear coating |
| 4 | Panel gasket | 2 | Silicone • EPDM sponge | Black |
| 5 | Cover gasket | 2 | Silicone sponge | White gray |
| 6 | Screw (Hexagonal) | 8 | Stainless steel | Unfinished |
| – | O-ring* | 8 | NBR | Black |

*O-ring is only available for EXWF20-□, 24-□, and 30-□ models.

■ Panel gasket material : Silicone : EXWF7-□ ~ 15-□ models • EPDM sponge : EXWF20-□ ~ 30-□ models.

## Color Type

| Code | S B Silver / Black | S G Silver / Gray | S N Silver / Navy |
|---|---|---|---|
| Color | | | |
| **Code** | **B B Black / Black** | **B G Black / Gray** | **B N Black / Navy** |
| Color | | | |

## EXWF dimensions

■ DXF/DWG/PDF/STP drawings available on our website.

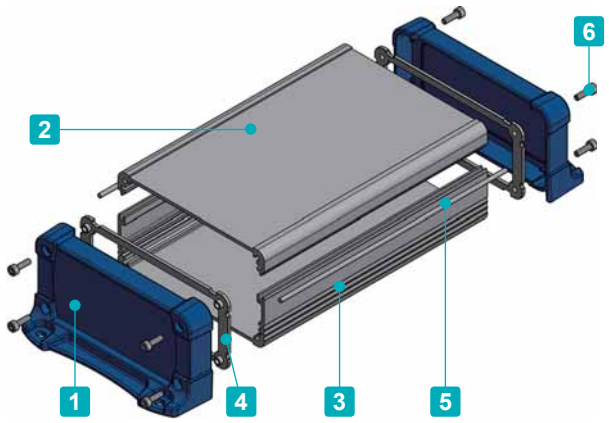


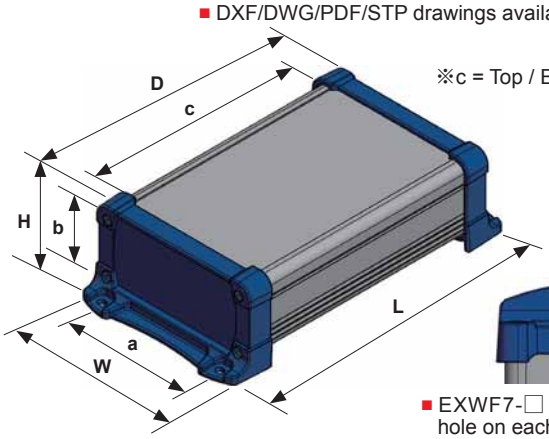


※c = Top / Bottom cover length.

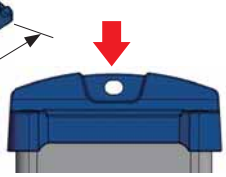

■ EXWF7-□ models have one hole on each flanged end panel

■ Listed D dimension may vary due to expansion and contraction of gasket from screw tightening.

■ Please suffix color code at the end of the product number.

### Product no. / Dimensions

| Product no. | IP Code | External dimensions | | | | Internal dimensions | | |
|---|---|---|---|---|---|---|---|---|
| | | W | H | D | L | a | b | c |
| EXWF 7- 3- 6□□ | IP65 | 66 | 34 | 57 | 82 | 47 | 20 | 46 |
| EXWF 7- 3- 9□□ | IP65 | 66 | 34 | 84 | 109 | 47 | 20 | 73 |
| EXWF 7- 3-11□□ | IP65 | 66 | 34 | 107 | 132 | 47 | 20 | 96 |
| EXWF 7- 4- 6□□ | IP65 | 66 | 44 | 57 | 82 | 47 | 30 | 46 |
| EXWF 7- 4- 9□□ | IP65 | 66 | 44 | 84 | 109 | 47 | 30 | 73 |
| EXWF 7- 4-11□□ | IP65 | 66 | 44 | 107 | 132 | 47 | 30 | 96 |
| EXWF 7- 6- 6□□ | IP65 | 66 | 59 | 57 | 82 | 47 | 45 | 46 |
| EXWF 7- 6- 9□□ | IP65 | 66 | 59 | 84 | 109 | 47 | 45 | 73 |
| EXWF 7- 6-11□□ | IP65 | 66 | 59 | 107 | 132 | 47 | 45 | 96 |
| EXWF 9- 4- 7□□ | IP65 | 86 | 39 | 68 | 94.8 | 67 | 25 | 56 |
| EXWF 9- 4-10□□ | IP65 | 86 | 39 | 98 | 124.8 | 67 | 25 | 86 |
| EXWF 9- 4-13□□ | IP65 | 86 | 39 | 128 | 154.8 | 67 | 25 | 116 |
| EXWF 9- 5- 7□□ | IP65 | 86 | 49 | 68 | 94.8 | 67 | 35 | 56 |
| EXWF 9- 5-10□□ | IP65 | 86 | 49 | 98 | 124.8 | 67 | 35 | 86 |
| EXWF 9- 5-13□□ | IP65 | 86 | 49 | 128 | 154.8 | 67 | 35 | 116 |
| EXWF 9- 6- 7□□ | IP65 | 86 | 64 | 68 | 94.8 | 67 | 50 | 56 |
| EXWF 9- 6-10□□ | IP65 | 86 | 64 | 98 | 124.8 | 67 | 50 | 86 |
| EXWF 9- 6-13□□ | IP65 | 86 | 64 | 128 | 154.8 | 67 | 50 | 116 |
| EXWF11- 4- 9□□ | IP65 | 113 | 41.5 | 87 | 119.8 | 89 | 24 | 74 |
| EXWF11- 4-13□□ | IP65 | 113 | 41.5 | 127 | 159.8 | 89 | 24 | 114 |
| EXWF11- 4-17□□ | IP65 | 113 | 41.5 | 173 | 205.8 | 89 | 24 | 160 |
| EXWF11- 6- 9□□ | IP65 | 113 | 56.5 | 87 | 119.8 | 89 | 39 | 74 |
| EXWF11- 6-13□□ | IP65 | 113 | 56.5 | 127 | 159.8 | 89 | 39 | 114 |
| EXWF11- 6-17□□ | IP65 | 113 | 56.5 | 173 | 205.8 | 89 | 39 | 160 |
| EXWF11- 7- 9□□ | IP65 | 113 | 71.5 | 87 | 119.8 | 89 | 54 | 74 |
| EXWF11- 7-13□□ | IP65 | 113 | 71.5 | 127 | 159.8 | 89 | 54 | 114 |
| EXWF11- 7-17□□ | IP65 | 113 | 71.5 | 173 | 205.8 | 89 | 54 | 160 |
| EXWF15- 5-11□□ | IP65 | 148 | 47 | 106 | 146.2 | 107 | 29 | 93 |
| EXWF15- 5-15□□ | IP65 | 148 | 47 | 146 | 186.2 | 107 | 29 | 133 |
| EXWF15- 5-20□□ | IP65 | 148 | 47 | 196 | 236.2 | 107 | 29 | 183 |
| EXWF15- 6-11□□ | IP65 | 148 | 62 | 106 | 146.2 | 107 | 44 | 93 |
| EXWF15- 6-15□□ | IP65 | 148 | 62 | 146 | 186.2 | 107 | 44 | 133 |
| EXWF15- 6-20□□ | IP65 | 148 | 62 | 196 | 236.2 | 107 | 44 | 183 |
| EXWF15- 8-11□□ | IP65 | 148 | 82 | 106 | 146.2 | 107 | 64 | 93 |
| EXWF15- 8-15□□ | IP65 | 148 | 82 | 146 | 186.2 | 107 | 64 | 133 |
| EXWF15- 8-20□□ | IP65 | 148 | 82 | 196 | 236.2 | 107 | 64 | 183 |
| EXWF15-10-11□□ | IP65 | 148 | 102 | 106 | 146.2 | 107 | 84 | 93 |
| EXWF15-10-15□□ | IP65 | 148 | 102 | 146 | 186.2 | 107 | 84 | 133 |
| EXWF15-10-20□□ | IP65 | 148 | 102 | 196 | 236.2 | 107 | 84 | 183 |

| Product no. | IP Code | External dimensions | | | | Internal dimensions | | |
|---|---|---|---|---|---|---|---|---|
| | | W | H | D | L | a | b | c |
| EXWF20- 6-14□□ | IP54 | 195 | 57 | 138 | 186.6 | 132 | 35 | 120 |
| EXWF20- 6-19□□ | IP54 | 195 | 57 | 190 | 238.6 | 132 | 35 | 172 |
| EXWF20- 6-25□□ | IP54 | 195 | 57 | 243 | 291.6 | 132 | 35 | 225 |
| EXWF20- 6-30□□ | IP54 | 195 | 57 | 298 | 346.6 | 132 | 35 | 280 |
| EXWF20- 8-14□□ | IP54 | 195 | 75 | 138 | 186.6 | 132 | 53 | 120 |
| EXWF20- 8-19□□ | IP54 | 195 | 75 | 190 | 238.6 | 132 | 53 | 172 |
| EXWF20- 8-25□□ | IP54 | 195 | 75 | 243 | 291.6 | 132 | 53 | 225 |
| EXWF20- 8-30□□ | IP54 | 195 | 75 | 298 | 346.6 | 132 | 53 | 280 |
| EXWF20-10-14□□ | IP54 | 195 | 95 | 138 | 186.6 | 132 | 73 | 120 |
| EXWF20-10-19□□ | IP54 | 195 | 95 | 190 | 238.6 | 132 | 73 | 172 |
| EXWF20-10-25□□ | IP54 | 195 | 95 | 243 | 291.6 | 132 | 73 | 225 |
| EXWF20-10-30□□ | IP54 | 195 | 95 | 298 | 346.6 | 132 | 73 | 280 |
| EXWF20-12-14□□ | IP54 | 195 | 120 | 138 | 186.6 | 132 | 98 | 120 |
| EXWF20-12-19□□ | IP54 | 195 | 120 | 190 | 238.6 | 132 | 98 | 172 |
| EXWF20-12-25□□ | IP54 | 195 | 120 | 243 | 291.6 | 132 | 98 | 225 |
| EXWF20-12-30□□ | IP54 | 195 | 120 | 298 | 346.6 | 132 | 98 | 280 |
| EXWF24- 7-17□□ | IP54 | 240 | 65 | 165 | 213.6 | 177 | 43 | 147 |
| EXWF24- 7-23□□ | IP54 | 240 | 65 | 225 | 273.6 | 177 | 43 | 207 |
| EXWF24- 7-29□□ | IP54 | 240 | 65 | 285 | 333.6 | 177 | 43 | 267 |
| EXWF24- 7-35□□ | IP54 | 240 | 65 | 345 | 393.6 | 177 | 43 | 327 |
| EXWF24- 9-17□□ | IP54 | 240 | 90 | 165 | 213.6 | 177 | 68 | 147 |
| EXWF24- 9-23□□ | IP54 | 240 | 90 | 225 | 273.6 | 177 | 68 | 207 |
| EXWF24- 9-29□□ | IP54 | 240 | 90 | 285 | 333.6 | 177 | 68 | 267 |
| EXWF24- 9-35□□ | IP54 | 240 | 90 | 345 | 393.6 | 177 | 68 | 327 |
| EXWF24-12-17□□ | IP54 | 240 | 115 | 165 | 213.6 | 177 | 93 | 147 |
| EXWF24-12-23□□ | IP54 | 240 | 115 | 225 | 273.6 | 177 | 93 | 207 |
| EXWF24-12-29□□ | IP54 | 240 | 115 | 285 | 333.6 | 177 | 93 | 267 |
| EXWF24-12-35□□ | IP54 | 240 | 115 | 345 | 393.6 | 177 | 93 | 327 |
| NEW EXWF30- 9-25□□ | IP54 | 298 | 93 | 247 | 295.6 | 231 | 68 | 228 |
| NEW EXWF30- 9-32□□ | IP54 | 298 | 93 | 317 | 365.6 | 231 | 68 | 298 |
| NEW EXWF30- 9-40□□ | IP54 | 298 | 93 | 397 | 445.6 | 231 | 68 | 378 |
| NEW EXWF30-14-25□□ | IP54 | 298 | 143 | 247 | 295.6 | 231 | 118 | 228 |
| NEW EXWF30-14-32□□ | IP54 | 298 | 143 | 317 | 365.6 | 231 | 118 | 298 |
| NEW EXWF30-14-40□□ | IP54 | 298 | 143 | 397 | 445.6 | 231 | 118 | 378 |

### How to install cover gaskets

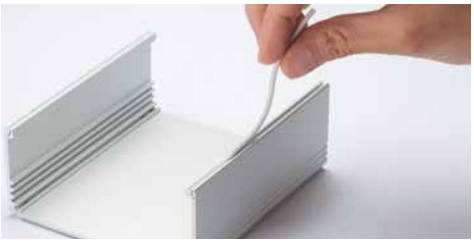

■ Insert cover gasket into the joint-grooves on the bottom cover.

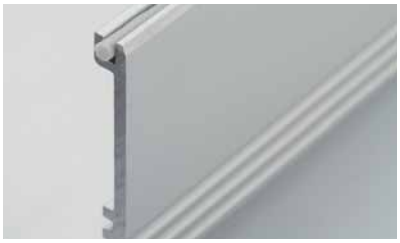

■ Ensure that a small portion of the cover gasket protrudes out in order to maintain a connection with the end panel.

## Cross-section view of top & bottom covers

■ DXF/DWG/PDF/STP drawings available on our website.

EXP • EXPE • EXW • EXPF • EXEF • EXWF7-3-□
EX6-3-□

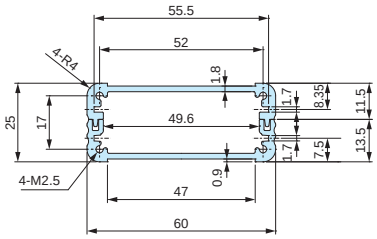


EXP • EXPE • EXW • EXPF • EXEF • EXWF7-4-□
EX6-4-□

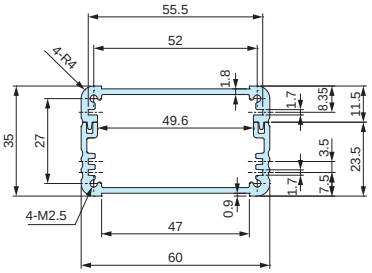


EXP • EXPE • EXW • EXPF • EXEF • EXWF7-6-□
EX6-5-□

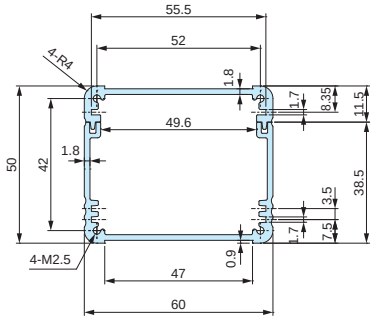


EXP • EXPE • EXW • EXPF • EXEF • EXWF9-4-□
EX8-3-□

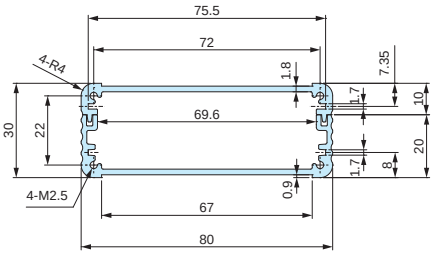


EXP • EXPE • EXW • EXPF • EXEF • EXWF9-5-□
EX8-4-□

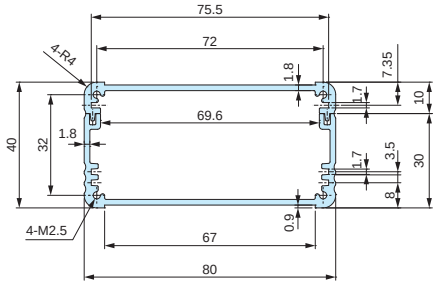


EXP • EXPE • EXW • EXPF • EXEF • EXWF9-6-□
EX8-6-□

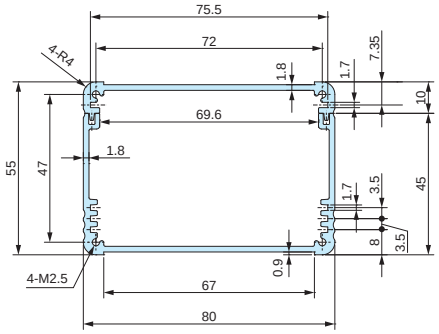


EXP • EXPE • EXW12-4-□
EXPF • EXEF • EXWF11-4-□
EX11-3-□

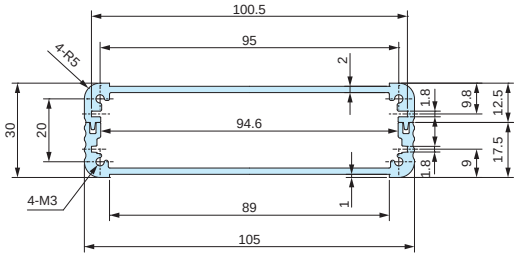


EXP • EXPE • EXW12-6-□
EXPF • EXEF • EXWF11-6-□
EX11-5-□

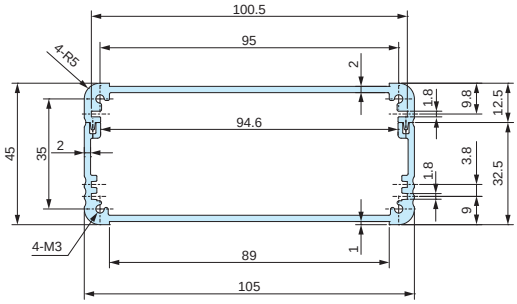

EXP • EXPE • EXW12-7-□
EXPF • EXEF • EXWF11-7-□
EX11-6-□

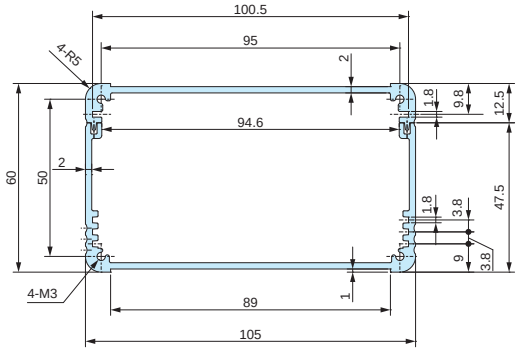


EXP • EXPE • EXW • EXPF • EXEF • EXWF15-5-□
EX14-4-□

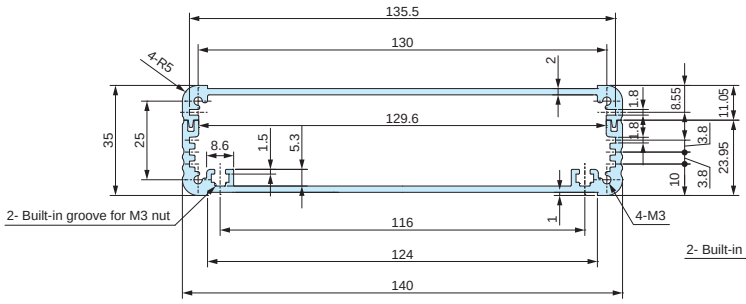


EXP • EXPE • EXW • EXPF • EXEF • EXWF15-6-□
EX14-5-□

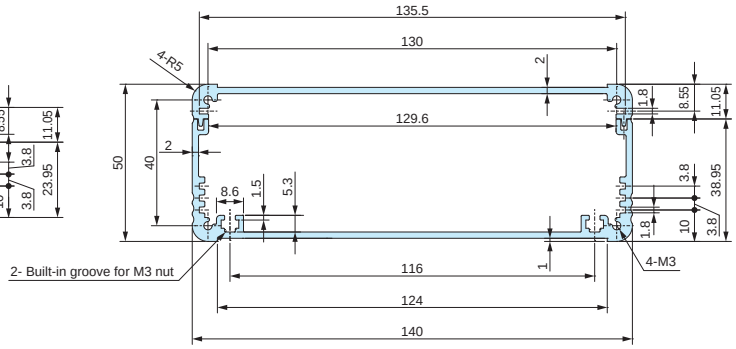


EXP • EXPE • EXW • EXPF • EXEF • EXWF15-8-□
EX14-7-□

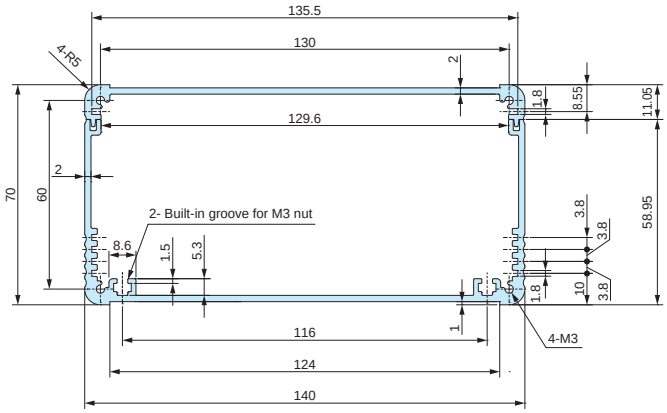


EXP • EXPE • EXW • EXPF • EXEF • EXWF15-10-□
EX14-9-□

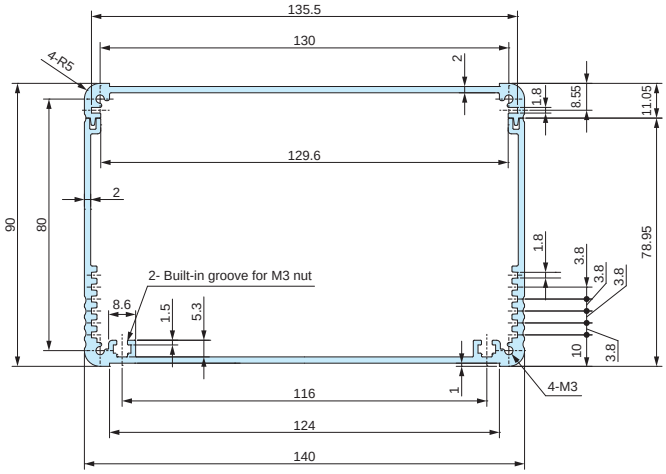


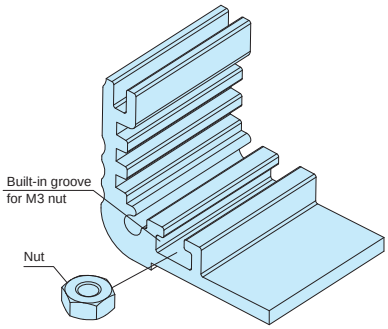


■ Optional sliding nut is available to be used for width 140mm or larger bottom covers.
See page 221 for further details.

## Cross-section view of top & bottom covers

■ DXF/DWG/PDF/STP drawings available on our website.

EXPT • EXP • EXPE • EXPF • EXEF • EXWF20-6-□
EX19-4-□

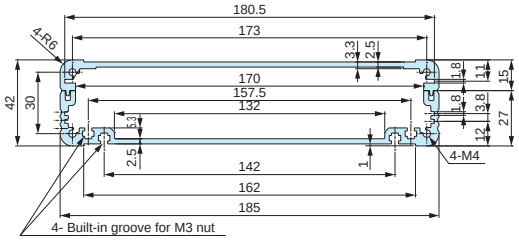


EXPT • EXP • EXPE20-7-□
EXPF • EXEF • EXWF20-8-□
EX19-6-□

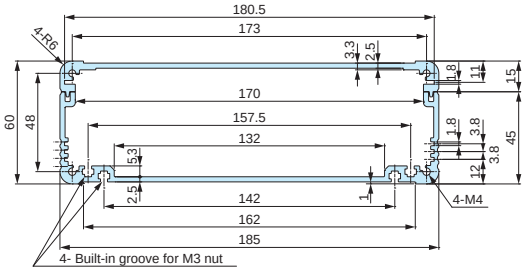


EXPT • EXP • EXPE20-9-□
EXPF • EXEF • EXWF20-10-□
EX19-8-□

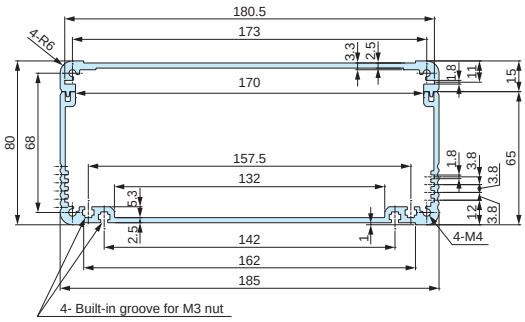


EXPT • EXP • EXPE • EXPF • EXEF • EXWF20-12-□
EX19-11-□

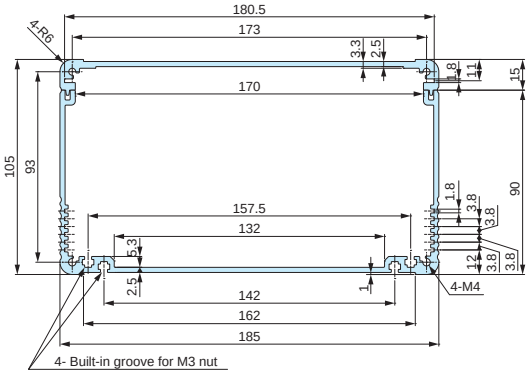


EXPT • EXP • EXPE24-6-□
EXPF • EXEF • EXWF24-7-□
EX23-5-□

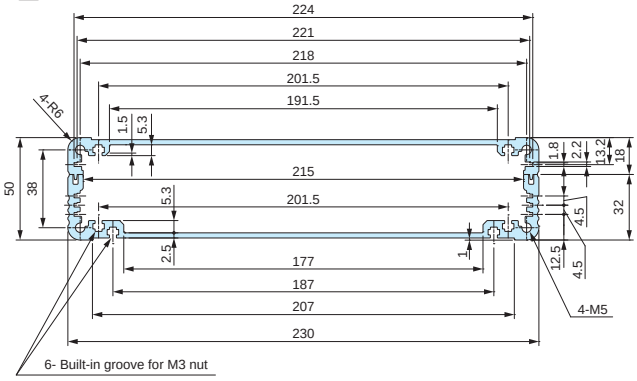


EXPT • EXP • EXPE • EXPF • EXEF • EXWF24-9-□
EX23-8-□

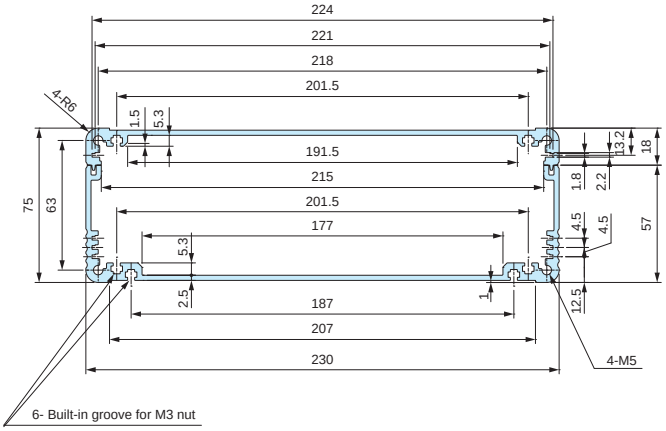


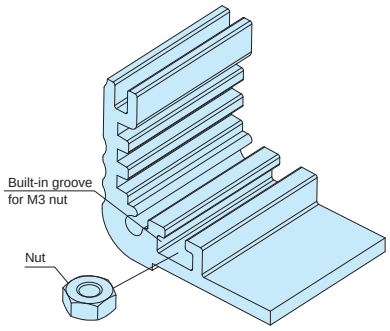


■ Optional sliding nut is available to be used for width 140mm or larger bottom covers.

See page 221 for further details.

EXPT • EXP • EXPE24-11-□
EXPF • EXEF • EXWF24-12-□
EX23-10-□

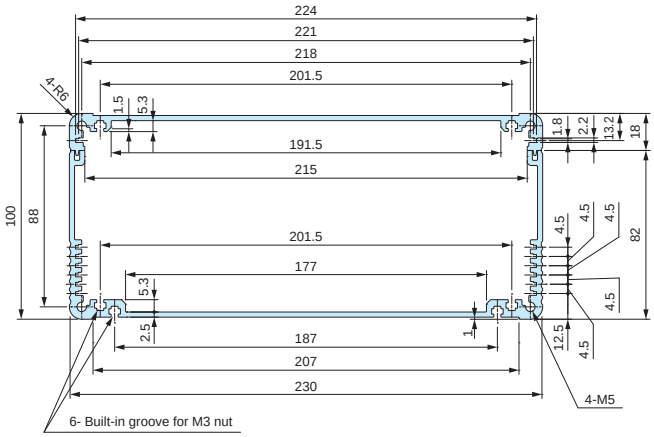


EXPT • EXP • EXPE • EXPF • EXEF • EXWF30-9-□
EX29-8-□

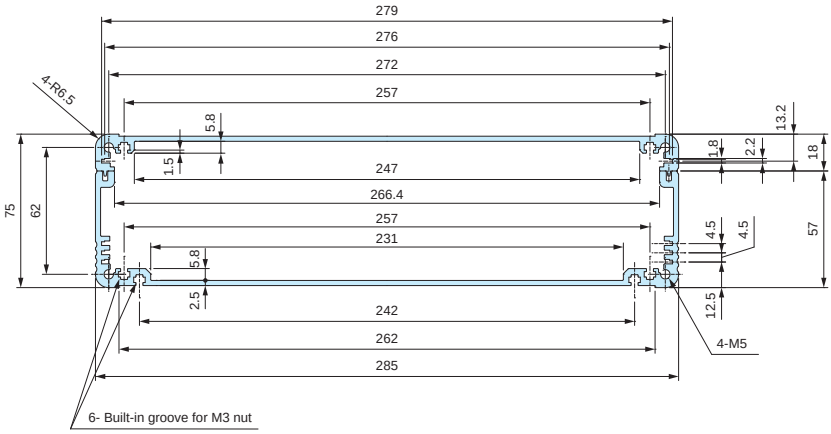


EXPT • EXP • EXPE • EXPF • EXEF • EXWF30-14-□
EX29-13-□

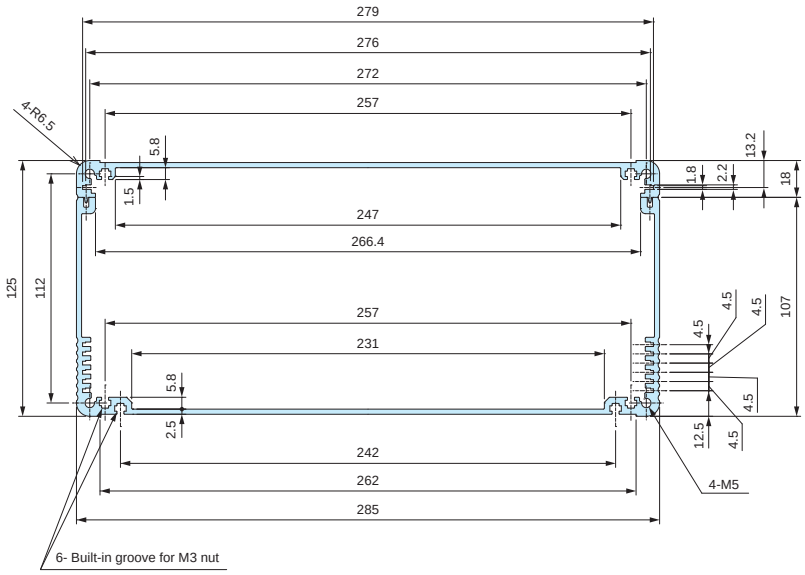

# MT-3N SLIDING NUT for EX□ • EXH□

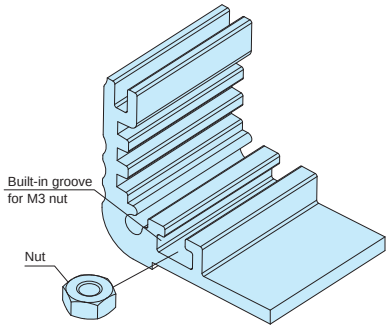


## MT-3N dimensions

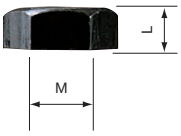


### Product no. / Dimensions

| Product no. | M | L | Material | Finish | Pack of |
|---|---|---|---|---|---|
| MT-3N | 3 | 2.4 | Steel | Black trivalent chromate | 50 |

■ Sliding nut can be used on all EXPT • EXP • EXPE • EXW • EXPF • EXEF • EXWF • EX models with width 140mm or larger bottom covers, as well as with width 230mm and 285mm top covers, on all EXH • EXHE • EXHF • EXHFE models with width 140mm or larger bottom covers, as well as all heat-sink top covers.

# EXEG series EMC SHIELDING FABRIC-OVER-FOAM GASKET

■ Exclusive EMC shielding fabric-over-foam gasket for EXPE • EXEF • EXHE • EXHFE models.

### Suitable Models

| Product no. | Suitable models |
|---|---|
| EXEG-2.5 | EXPE7-□, 9-□, 12-□, 15-□, EXEF7-□, 9-□, 11-□, 15-□<br>EXHE8-□, 11-□, 14-□, EXHFE8-□, 11-□, 14-□ |
| EXEG-3.2 | EXPE20-□, 24-□, 30-□, EXEF20-□, 24-□<br>EXHE19-□, 23-□, 29-□, EXHFE19-□, 23-□, 29-□ |

### Product no. / Dimensions

| Product no. | Dimensions | Pack of |
|---|---|---|
| EXEG-2.5 | Φ2.5×500mm | 1 |
| EXEG-3.2 | Φ3.2×500mm | 1 |

Length tolerance = +/- 10%

EMC Shielding Effects

■ Material / Color : Conductive fiber • TPE / Metallic gray

# EX series APPLICATION EXAMPLE

## Tube Amplifier

Product by MJ Audio Technology

## IoT Relay Module

Product by Bunnyhop (Japan)

## Premain Power Amplifier

Product by AY-densi (Japan)

## USB Edge Node

Product by SHINWA (Japan)

# TLW series TILT LEG

APPLICATION EXAMPLE

- Double shot injection molded feet with soft and well-designed rounded shape.
- Non-slip design with Elastomer (TPE) pad.
- Available in 3 different color patterns (2 color patterns for TLW-70 models).
- TLW-70E models are exclusively for use with width 185mm or larger bottom covers of EXP • EXPE • EXW • EX • EXH • EXHE aluminium enclosures.

| Technical Data |
|---|
| Max load : 7kg |

**Components**

| No. | Part name | Pcs | Material | Color / Finish |
|---|---|---|---|---|
| 1 | Front foot | 2 | PC + ABS UL94V-0 • TPE | Black & Black • Navy & Gray • Light gray & Gray |
| 2 | Rear foot | 2 | PC + ABS UL94V-0 • TPE | Black & Black • Navy & Gray • Light gray & Gray |
| – | Screw | 4 | Steel M3-8 pan head | Black trivalent chromate |
| – | Nut | 4 | Steel M3 | Black trivalent chromate |

## TLW dimensions

- DXF/DWG/PDF/STP drawings available on our website.

Mounting hole (Front)

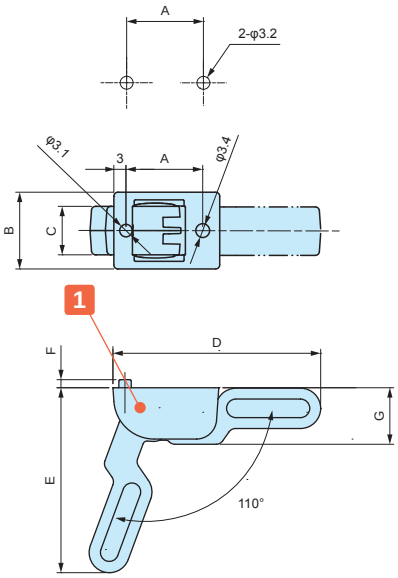


Mounting hole (Rear)

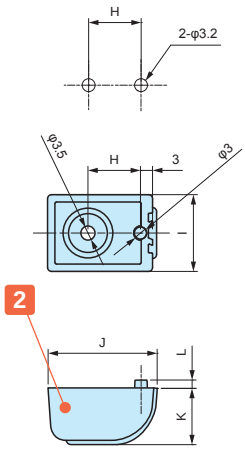


- TLW-70E□□ models are for installation (with M3 nut) into the built-in grooves on bottom-covers of EXP • EXPE 20-6, EXH • EXHE • EX 19-4 or larger models.
- Hole milling is required to install TLW-46□□ and TLW-70□□ models.
- Max installation panel thickness : t = 3.5mm

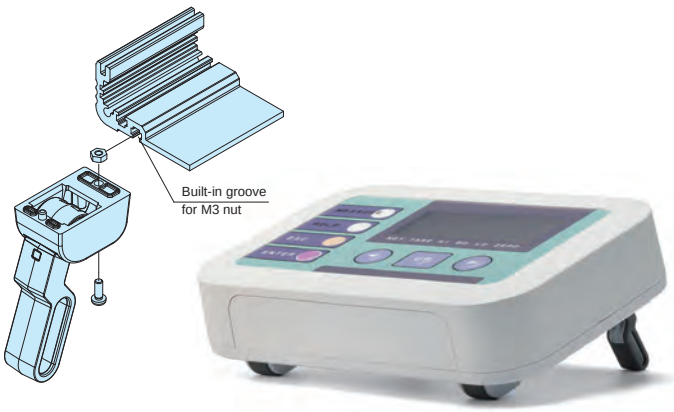


**Product no. / Dimensions**

| Product no. | A | B | C | D | E | F | G | H | I | J | K | L | Color (plastic) | Color (TPE) | Weight (g) |
|---|---|---|---|---|---|---|---|---|---|---|---|---|---|---|---|
| TLW-46BB | 19 | 19 | 12 | 51.2 | 45.9 | 2 | 14 | 13 | 19 | 27 | 14 | 2 | Black | Black | 23 |
| TLW46-NG | 19 | 19 | 12 | 51.2 | 45.9 | 2 | 14 | 13 | 19 | 27 | 14 | 2 | Navy | Gray | 23 |
| TLW-46LG | 19 | 19 | 12 | 51.2 | 45.9 | 2 | 14 | 13 | 19 | 27 | 14 | 2 | Light gray | Gray | 23 |
| TLW-70EBB | – | 25 | 16 | 75.4 | 69 | 3 | 21.5 | – | 25 | 39 | 21.5 | 3 | Black | Black | 59 |
| TLW-70ENG | – | 25 | 16 | 75.4 | 69 | 3 | 21.5 | – | 25 | 39 | 21.5 | 3 | Navy | Gray | 59 |
| TLW-70ELG | – | 25 | 16 | 75.4 | 69 | 3 | 21.5 | – | 25 | 39 | 21.5 | 3 | Light gray | Gray | 59 |
| TLW-70BB | 30 | 25 | 16 | 75.4 | 69 | 2 | 21.5 | 20 | 25 | 39 | 21.5 | 2 | Black | Black | 59 |
| TLW-70LG | 30 | 25 | 16 | 75.4 | 69 | 2 | 21.5 | 20 | 25 | 39 | 21.5 | 2 | Light gray | Gray | 59 |

# AW • AWN • AWP series

## IP68 ALUMINIUM ENCLOSURE

**AW • AWN • AWP series are highly functional aluminium enclosures which are IP68 (24 hours / 1m depth immersion) rated with heat dissipating heat-sink fins.**
**34 sizes available. Standard, Flanged, Shielding, and Silicone protector types are available.**
**Suitable for LED power supply, industrial camera, controller or measuring instrument where waterproof and cooling performance are crucial.**

## APPLICATION EXAMPLE

### Waterproof Boating Network Modular System

Product by Dockmate (Belgium)

### GNSS Receiver

Product by KomNavRus

### Heavy Duty Portable Hardness Tester

Product by DEMEQ (Argentina)

### LoRa Wan Gateway

Product by ProEsys (Italy)

## Radio-Control Electronic Exploder

Product by CODETEL (France)

## Pin Hole Detector

Product by SANKO ECECTRONIC LABORATORY (Japan)

## FBG Data Logger

Product by NAGANO KEIKI (Japan)

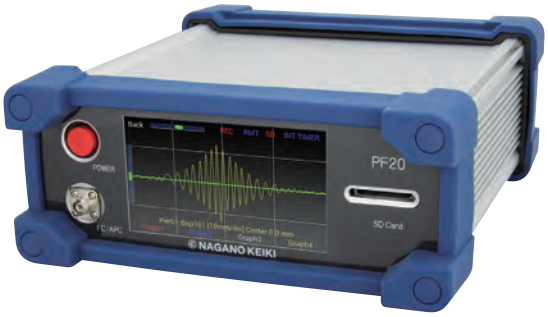


## Data Logger with 3G Modem Report Function

Product by mSolution (Hong Kong)

## Custom Length Available

Flexible frame length from 50mm to 700mm in 1mm intervals.

No minimum order quantity and short lead time for small quantity order.

See our website for further details.

# AW series IP68 FLANGED ALUMINIUM ENCLOSURE

EMC Shielding Effects

IP68

- IP68 and heat dissipation enclosure. Designed with flanged end panels.
- PCB or chassis is mounted by sliding it horizontally into an inner-grooved body frame.
- Designed for a tough environment where waterproof and heat countermeasures are required.
- Suitable for outdoor use such as LED power supply and junction boxes.

**Technical Data**

Protection class: IP68 (24 hours/1m depth)
Operating temperature: -40°C ~ +105°C
Recommended torque: 1.0N • m

### Normal N type Components

| No. | Part name | Pcs | Material | Color / Finish |
|---|---|---|---|---|
| 1 | Flanged end panel | 2 | Diecast aluminium ADC12 | Metallic gray • Black / Powder coated |
| 2 | Body frame | 1 | Extruded aluminium A6063S-T5 | Silver • Black / Anodized with clear coating |
| 3 | Gasket | 2 | Silicone | Black |
| 4 | Screw | 8 | Stainless steel | Unfinished |

### EMC Shielded E type Components

| No. | Part name | Pcs | Material | Color / Finish |
|---|---|---|---|---|
| 1 | Flanged end panel | 2 | Diecast aluminium ADC12 | Silver • Black / Painted (Unfinished inside) |
| 2 | Body frame | 1 | Extruded aluminium A6063S-T5 | Silver • Black / Anodized with clear coating |
| 3 | Gasket | 2 | Conductive silicone | Black |
| 4 | Screw | 8 | Stainless steel | Unfinished |

## Normal - N type

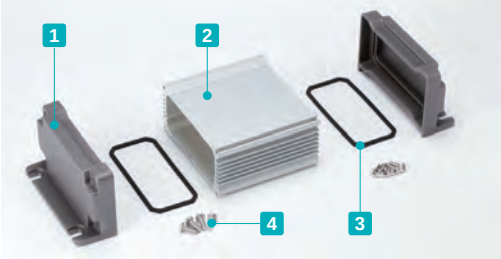


## Color type

Metallic gray / Silver

N G S

Black / Silver

N B S

Black / Black

N B B

## EMC Shielded - E type

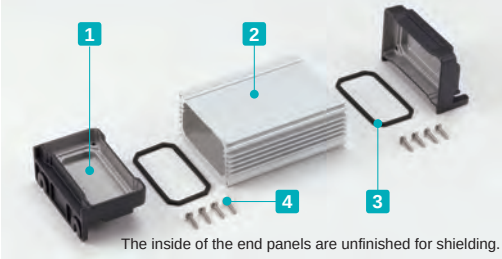


The inside of the end panels are unfinished for shielding.

## Color type

Silver / Silver

E S S

Black / Silver

E B S

Black / Black

E B B

## AW dimensions

■ DXF/DWG/PDF/STP drawings available on our website.

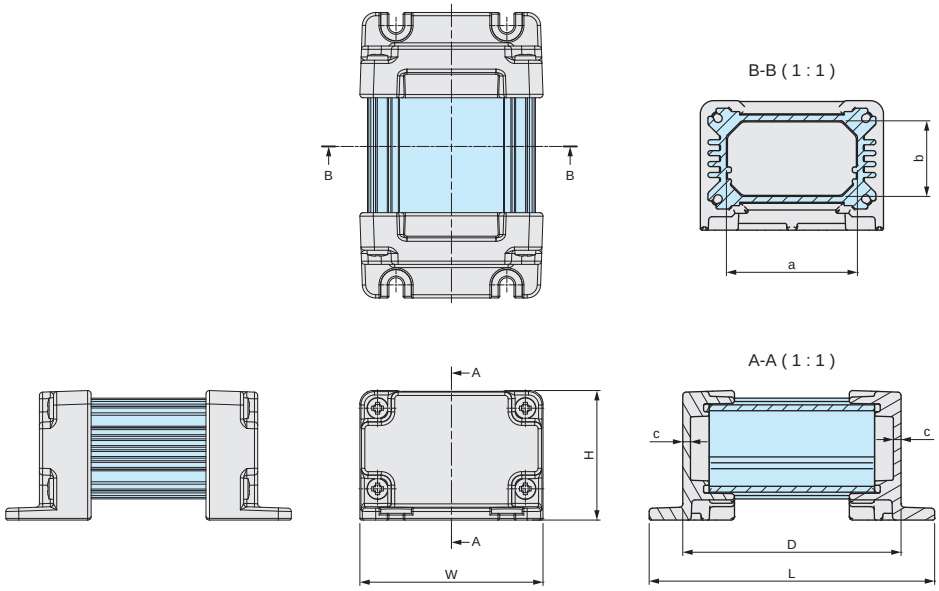


See page 235 and 236 for detailed body frame dimensions.

### Product no. / Dimensions

■ Please suffix color code at the end of the product number.

| Product no. | W | H | D | L | a | b | c | Weight (g) |
|---|---|---|---|---|---|---|---|---|
| AW 5-4- 7□□□ | 54.6 | 38.6 | 65 | 85 | 39 | 22.5 | 2.3 | 128.5 |
| AW 5-4- 9□□□ | 54.6 | 38.6 | 85 | 105 | 39 | 22.5 | 2.3 | 149 |
| AW 5-4-11□□□ | 54.6 | 38.6 | 110 | 130 | 39 | 22.5 | 2.3 | 175 |
| AW 5-4-14□□□ | 54.6 | 38.6 | 135 | 155 | 39 | 22.5 | 2.3 | 201.5 |
| AW 7-7- 8□□□ | 65.8 | 70.8 | 80 | 106 | 47 | 51 | 2.5 | 294.5 |
| AW 7-7-11□□□ | 65.8 | 70.8 | 110 | 136 | 47 | 51 | 2.5 | 350 |
| AW 7-7-15□□□ | 65.8 | 70.8 | 150 | 176 | 47 | 51 | 2.5 | 424.5 |
| AW 7-7-20□□□ | 65.8 | 70.8 | 200 | 226 | 47 | 51 | 2.5 | 517 |
| AW 7-7-25□□□ | 65.8 | 70.8 | 250 | 276 | 47 | 51 | 2.5 | 610 |
| AW 8-5- 9□□□ | 80.8 | 50.8 | 90 | 116 | 62 | 31 | 2.5 | 289.5 |
| AW 8-5-12□□□ | 80.8 | 50.8 | 115 | 141 | 62 | 31 | 2.5 | 330.5 |
| AW 8-5-14□□□ | 80.8 | 50.8 | 140 | 166 | 62 | 31 | 2.5 | 372 |
| AW 8-5-18□□□ | 80.8 | 50.8 | 175 | 201 | 62 | 31 | 2.5 | 429.5 |
| AW 9-9-10□□□ | 86.3 | 92 | 100 | 129 | 66.5 | 66.5 | 3 | 560.5 |
| AW 9-9-13□□□ | 86.3 | 92 | 125 | 154 | 66.5 | 66.5 | 3 | 633.5 |
| AW 9-9-17□□□ | 86.3 | 92 | 170 | 199 | 66.5 | 66.5 | 3 | 764.5 |
| AW 9-9-22□□□ | 86.3 | 92 | 220 | 249 | 66.5 | 66.5 | 3 | 910.5 |
| AW 9-9-28□□□ | 86.3 | 92 | 275 | 304 | 66.5 | 66.5 | 3 | 1,071 |
| AW11-6-11□□□ | 106.3 | 62 | 110 | 139 | 86.5 | 36.5 | 3 | 526.5 |
| AW11-6-15□□□ | 106.3 | 62 | 150 | 179 | 86.5 | 36.5 | 3 | 625 |
| AW11-6-19□□□ | 106.3 | 62 | 190 | 219 | 86.5 | 36.5 | 3 | 723.5 |
| AW11-6-24□□□ | 106.3 | 62 | 240 | 269 | 86.5 | 36.5 | 3 | 847 |
| AW12-8-11□□□ | 120 | 77 | 105 | 134 | 100.2 | 51.5 | 3 | 614.5 |
| AW12-8-14□□□ | 120 | 77 | 140 | 169 | 100.2 | 51.5 | 3 | 720.5 |
| AW12-8-17□□□ | 120 | 77 | 179.5 | 208.5 | 100.2 | 51.5 | 3 | 840 |
| AW12-8-22□□□ | 120 | 77 | 215 | 244 | 100.2 | 51.5 | 3 | 947.5 |
| AW16-9-14□□□ | 156.3 | 87 | 135 | 164 | 136.5 | 61.5 | 3 | 945.5 |
| AW16-9-18□□□ | 156.3 | 87 | 175 | 204 | 136.5 | 61.5 | 3 | 1,092.5 |
| AW16-9-23□□□ | 156.3 | 87 | 225 | 254 | 136.5 | 61.5 | 3 | 1,275.5 |
| AW16-9-28□□□ | 156.3 | 87 | 275 | 304 | 136.5 | 61.5 | 3 | 1,459 |
| AW21-9-17□□□ | 206.3 | 87 | 170 | 199 | 186.5 | 61.5 | 3 | 1,303 |
| AW21-9-21□□□ | 206.3 | 87 | 210 | 239 | 186.5 | 61.5 | 3 | 1,473.5 |
| AW21-9-26□□□ | 206.3 | 87 | 260 | 289 | 186.5 | 61.5 | 3 | 1,686.5 |
| AW21-9-31□□□ | 206.3 | 87 | 310 | 339 | 186.5 | 61.5 | 3 | 1,899.5 |

■ Custom length is available.

## Accessories (Optional parts)

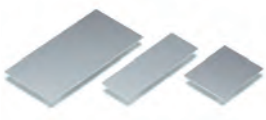

Mounting plate AWC series
See page 238

Hexagon socket head screw HCS series
See page 238

Cable gland
See page 333 ~ 340

Pole mounting bracket SSK series
See website

Protective vent PMF series
See page 325 ~ 326

# AWN series IP68 HEAT-SINK ALUMINIUM ENCLOSURE

EMC Shielding Effects

IP68

- IP68 and heat dissipation enclosure design. Selectable in both Normal or EMC Shielded type.
- The extruded aluminium frame and diecast aluminium panels makes it extremely suitable to be used in harsh environments where waterproofing and heat dissipation is essential.
- PCB or chassis can be mounted by sliding it horizontally into inner-grooved body frame.
- Suitable for measuring instruments, industrial control box, and industrial camera housing, among others.

**Technical Data**

Protection class: IP68 (24 hours/1m depth)
Operating temperature: -40°C ~ +105°C
Recommended torque: 1.0N • m

### Normal N type Components

| No. | Part name | Pcs | Material | Color / Finish |
|---|---|---|---|---|
| 1 | End panel | 2 | Diecast aluminium ADC12 | Metallic gray • Black / Powder coated |
| 2 | Body frame | 1 | Extruded aluminium A6063S-T5 | Silver • Black / Anodized with clear coating |
| 3 | Gasket | 2 | Silicone | Black |
| 4 | Screw | 8 | Stainless steel | Unfinished |
| 5 | Rubber feet | 4 | Polyurethane | Black |

### EMC Shielded E type Components

| No. | Part name | Pcs | Material | Color / Finish |
|---|---|---|---|---|
| 1 | End panel | 2 | Diecast aluminium ADC12 | Silver • Black / Painted (Unfinished inside) |
| 2 | Body frame | 1 | Extruded aluminium A6063S-T5 | Silver • Black / Anodized with clear coating |
| 3 | Gasket | 2 | Conductive silicone | Black |
| 4 | Screw | 8 | Stainless steel | Unfinished |
| 5 | Rubber feet | 4 | Polyurethane | Black |

## Normal - N type

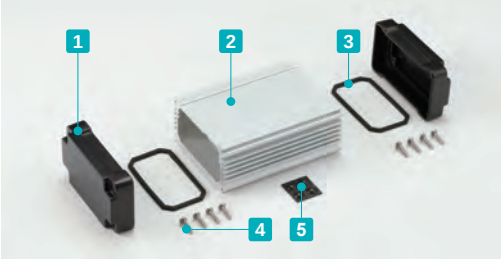


## Color type

Metallic gray / Silver

N G S

Black / Silver

N B S

Black / Black

N B B

## EMC Shielded - E type

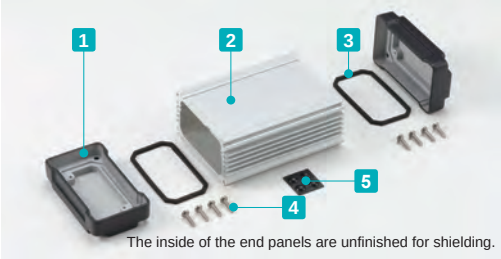


The inside of the end panels are unfinished for shielding.

## Color type

Silver / Silver

E S S

Black / Silver

E B S

Black / Black

E B B

## AWN dimensions

■ DXF/DWG/PDF/STP drawings available on our website.

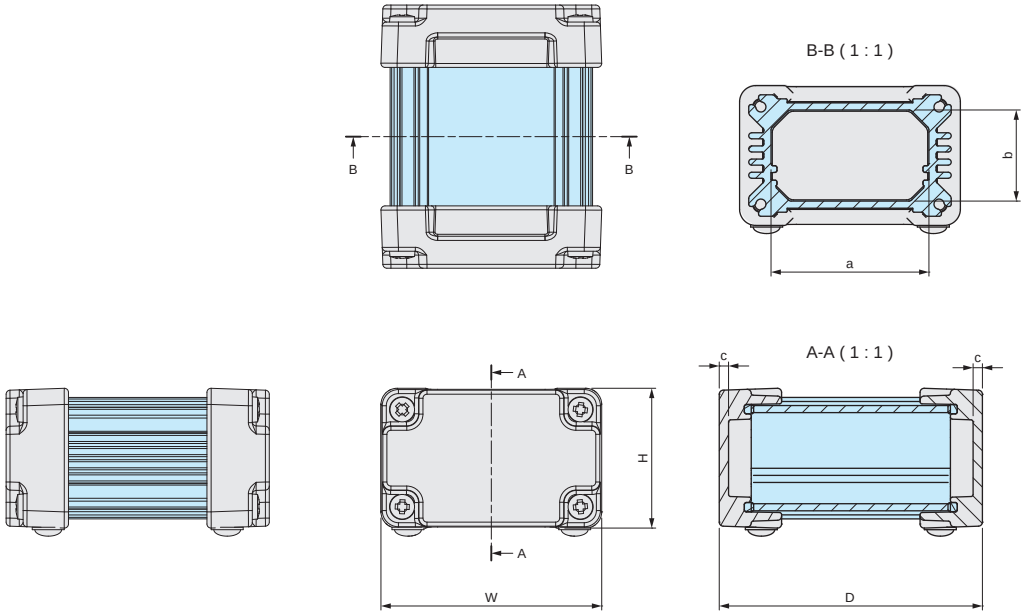


See page 235 and 236 for detailed body frame dimensions.

### Product no. / Dimensions

■ Please suffix color code at the end of the product number.

| Product no. | W | H | D | a | b | c | Weight (g) |
|---|---|---|---|---|---|---|---|
| AWN 5-4- 7□□□ | 54.6 | 34.6 | 65 | 39 | 22.5 | 2.3 | 118.5 |
| AWN 5-4- 9□□□ | 54.6 | 34.6 | 85 | 39 | 22.5 | 2.3 | 139 |
| AWN 5-4-11□□□ | 54.6 | 34.6 | 110 | 39 | 22.5 | 2.3 | 165 |
| AWN 5-4-14□□□ | 54.6 | 34.6 | 135 | 39 | 22.5 | 2.3 | 191.5 |
| AWN 7-7- 8□□□ | 65.8 | 65.8 | 80 | 47 | 51 | 2.5 | 272.5 |
| AWN 7-7-11□□□ | 65.8 | 65.8 | 110 | 47 | 51 | 2.5 | 328 |
| AWN 7-7-15□□□ | 65.8 | 65.8 | 150 | 47 | 51 | 2.5 | 402.5 |
| AWN 7-7-20□□□ | 65.8 | 65.8 | 200 | 47 | 51 | 2.5 | 495 |
| AWN 7-7-25□□□ | 65.8 | 65.8 | 250 | 47 | 51 | 2.5 | 588 |
| AWN 8-5- 9□□□ | 80.8 | 45.8 | 90 | 62 | 31 | 2.5 | 259.5 |
| AWN 8-5-12□□□ | 80.8 | 45.8 | 115 | 62 | 31 | 2.5 | 300.5 |
| AWN 8-5-14□□□ | 80.8 | 45.8 | 140 | 62 | 31 | 2.5 | 342 |
| AWN 8-5-18□□□ | 80.8 | 45.8 | 175 | 62 | 31 | 2.5 | 399.5 |
| AWN 9-9-10□□□ | 86.3 | 86.3 | 100 | 66.5 | 66.5 | 3 | 521.5 |
| AWN 9-9-13□□□ | 86.3 | 86.3 | 125 | 66.5 | 66.5 | 3 | 594.5 |
| AWN 9-9-17□□□ | 86.3 | 86.3 | 170 | 66.5 | 66.5 | 3 | 725.5 |
| AWN 9-9-22□□□ | 86.3 | 86.3 | 220 | 66.5 | 66.5 | 3 | 871.5 |
| AWN 9-9-28□□□ | 86.3 | 86.3 | 275 | 66.5 | 66.5 | 3 | 1,032 |
| AWN11-6-11□□□ | 106.3 | 56.3 | 110 | 86.5 | 36.5 | 3 | 479.5 |
| AWN11-6-15□□□ | 106.3 | 56.3 | 150 | 86.5 | 36.5 | 3 | 578 |
| AWN11-6-19□□□ | 106.3 | 56.3 | 190 | 86.5 | 36.5 | 3 | 676.5 |
| AWN11-6-24□□□ | 106.3 | 56.3 | 240 | 86.5 | 36.5 | 3 | 800 |
| AWN12-8-11□□□ | 120 | 71.3 | 105 | 100.2 | 51.5 | 3 | 590.5 |
| AWN12-8-14□□□ | 120 | 71.3 | 140 | 100.2 | 51.5 | 3 | 696.5 |
| AWN12-8-17□□□ | 120 | 71.3 | 179.5 | 100.2 | 51.5 | 3 | 816 |
| AWN12-8-22□□□ | 120 | 71.3 | 215 | 100.2 | 51.5 | 3 | 923.5 |
| AWN16-9-14□□□ | 156.3 | 81.3 | 135 | 136.5 | 61.5 | 3 | 871.5 |
| AWN16-9-18□□□ | 156.3 | 81.3 | 175 | 136.5 | 61.5 | 3 | 1,018.5 |
| AWN16-9-23□□□ | 156.3 | 81.3 | 225 | 136.5 | 61.5 | 3 | 1,201.5 |
| AWN16-9-28□□□ | 156.3 | 81.3 | 275 | 136.5 | 61.5 | 3 | 1,385 |
| AWN21-9-17□□□ | 206.3 | 81.3 | 170 | 186.5 | 61.5 | 3 | 1,261 |
| AWN21-9-21□□□ | 206.3 | 81.3 | 210 | 186.5 | 61.5 | 3 | 1,431.5 |
| AWN21-9-26□□□ | 206.3 | 81.3 | 260 | 186.5 | 61.5 | 3 | 1,644.5 |
| AWN21-9-31□□□ | 206.3 | 81.3 | 310 | 186.5 | 61.5 | 3 | 1,857.5 |

■ Custom length is available.

## Accessories (Optional parts)

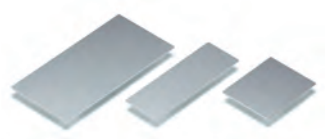

Mounting plate AWC series
See page 238

Hexagon socket head screw HCS series
See page 238

Cable gland
See page 333 ~ 340

Silicone protector AWSP series
See page 237

# AWP series IP68 ALUMINIUM ENCLOSURE with SILICONE PROTECTOR

EMC Shielding Effects

IP68

| Technical Data |
|---|
| Protection class: IP68 (24 hours/1m depth)<br>Operating temperature: -40°C ~ +105°C<br>Recommended torque: 1.0N • m |

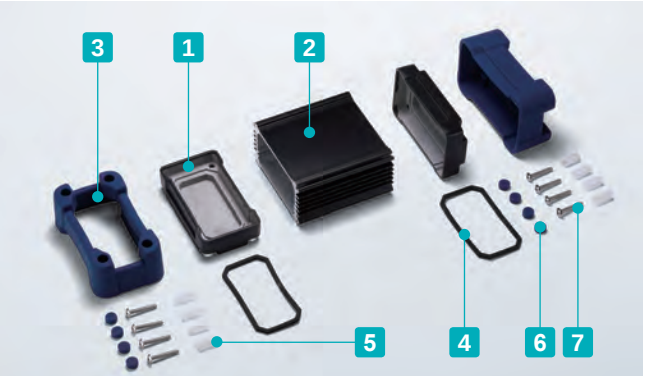


The inside of the end panels are unpainted for shielding.

- Strong impact resistant enclosure with tough silicone boot protectors.
- Specifically designed with heat dissipation effect, EMC shielding and IP68 rating.
- PCB or chassis can be horizontally mounted by sliding into an inner-grooved body frame.
- Available in 25 sizes and 6 different color combinations. Selectable from a total of 150 different combinations.
- Suitable for measuring instruments, industrial control box, industrial camera housing, etc.

## Components

| No. | Part name | Pcs | Material | Color / Finish |
|---|---|---|---|---|
| 1 | End panel | 2 | Diecast aluminium ADC12 | Silver • Black / Painted (Unfinished inside) |
| 2 | Body frame | 1 | Extruded aluminium A6063S-T5 | Silver • Black / Anodized with clear coating |
| 3 | Protector | 2 | Silicone | Black • Gray • Navy |
| 4 | Conductive gasket | 2 | Conductive silicone | Black |
| 5 | Spacer | 8 | Resin | White |
| 6 | Blind cap | 8 | Silicone | Black • Gray • Navy |
| 7 | Screw | 8 | Stainless steel | Unfinished |

- AWP series utilizes AWN series E type enclosures.
  If N type is required, kindly purchase the enclosure and silicone protector separately.

### Color Type

| Code | S B Silver / Black | S G Silver / Gray | S N Silver / Navy |
|---|---|---|---|
| Color | | 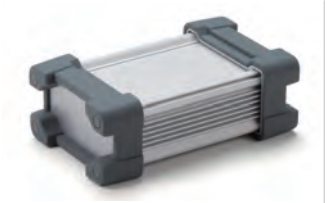 | 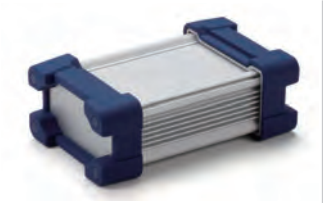 |
| **Code** | **B B Black / Black** | **B G Black / Gray** | **B N Black / Navy** |
| Color | | 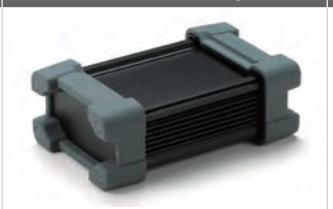 | 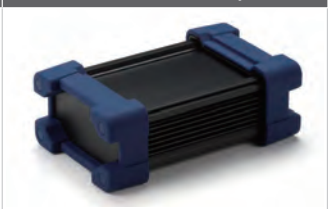 |

## Ordering Number

For example, in case of ordering AWP8-5-9 size, Black enclosure and Navy silicone protector.

## Product no. : AWP8-5-9

**B** **N**

Put a color code SB, SG, SN, BB, BG or BN.

※ Thermal resistance test condition
- Ambient air cooling
- Heat-sink fins are set perpendicular to the ground with temperature at 60°C.
- Anodized aluminium extrusion
- Heat source is applied on the opposite side (inner side) of the fins.

### Product no. / Dimensions

See page 235 and 236 for detailed body frame dimensions.

| Product no. | W | H | D | ※Thermal resistance rate (°C/W) | Weight (g) |
|---|---|---|---|---|---|
| AWP 8-5- 9□□ | 87.4(80.8) | 53.6(45.8) | 114 (90) | 5.97 | 353.5 |
| AWP 8-5-12□□ | 87.4(80.8) | 53.6(45.8) | 139(115) | 5.01 | 394.5 |
| AWP 8-5-14□□ | 87.4(80.8) | 53.6(45.8) | 164(140) | 4.37 | 436 |
| AWP 8-5-18□□ | 87.4(80.8) | 53.6(45.8) | 199(175) | 3.76 | 493.5 |
| AWP 9-9-10□□ | 93.9(86.3) | 95.1(86.3) | 130(100) | 3.1 | 693 |
| AWP 9-9-13□□ | 93.9(86.3) | 95.1(86.3) | 155(125) | 2.63 | 766 |
| AWP 9-9-17□□ | 93.9(86.3) | 95.1(86.3) | 200(170) | 2.12 | 897 |
| AWP 9-9-22□□ | 93.9(86.3) | 95.1(86.3) | 250(220) | 1.79 | 1,043 |
| AWP 9-9-28□□ | 93.9(86.3) | 95.1(86.3) | 305(275) | 1.54 | 1,203.5 |
| AWP11-6-11□□ | 113.9(106.3) | 65.1(56.3) | 140(110) | 4.52 | 652.5 |
| AWP11-6-15□□ | 113.9(106.3) | 65.1(56.3) | 180(150) | 3.62 | 751.5 |
| AWP11-6-19□□ | 113.9(106.3) | 65.1(56.3) | 220(190) | 3.08 | 850 |
| AWP11-6-24□□ | 113.9(106.3) | 65.1(56.3) | 270(240) | 2.64 | 973 |
| AWP12-8-11□□ | 127.6(120) | 80.1(71.3) | 135(105) | 3.6 | 778.5 |
| AWP12-8-14□□ | 127.6(120) | 80.1(71.3) | 170(140) | 2.93 | 885 |
| AWP12-8-17□□ | 127.6(120) | 80.1(71.3) | 209.5(179.5) | 2.47 | 1,004.5 |
| AWP12-8-22□□ | 127.6(120) | 80.1(71.3) | 245(215) | 2.18 | 1,112 |
| AWP16-9-14□□ | 163.9(156.3) | 90.1(81.3) | 165(135) | 2.64 | 1,094 |
| AWP16-9-18□□ | 163.9(156.3) | 90.1(81.3) | 205(175) | 2.2 | 1,240.5 |
| AWP16-9-23□□ | 163.9(156.3) | 90.1(81.3) | 255(225) | 1.86 | 1,424 |
| AWP16-9-28□□ | 163.9(156.3) | 90.1(81.3) | 305(275) | 1.63 | 1,607.5 |
| AWP21-9-17□□ | 213.9(206.3) | 90.1(81.3) | 202(170) | 2.3 | 1,571.5 |
| AWP21-9-21□□ | 213.9(206.3) | 90.1(81.3) | 242(210) | 1.99 | 1,742 |
| AWP21-9-26□□ | 213.9(206.3) | 90.1(81.3) | 292(260) | 1.72 | 1,955.5 |
| AWP21-9-31□□ | 213.9(206.3) | 90.1(81.3) | 342(310) | 1.54 | 2,168.5 |

■ Custom length is available.

■ ( ) value = enclosure dimension.

## AWP dimensions

■ DXF/DWG/PDF/STP drawings available on our website.

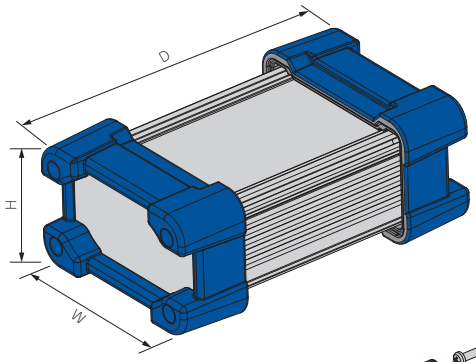


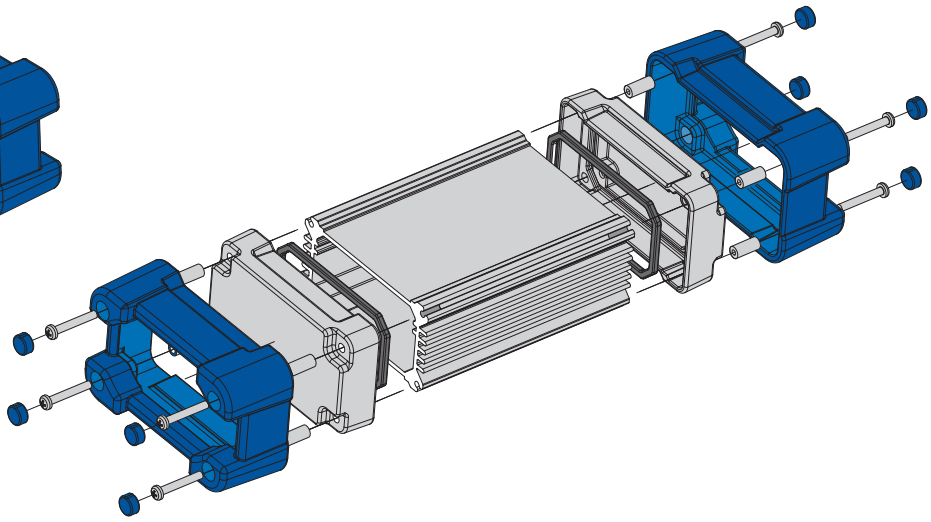

## Cross-section view of frame

■ DXF/DWG/PDF/STP drawings available on our website.

AW • AWN5-4-□
AWA5-3-□

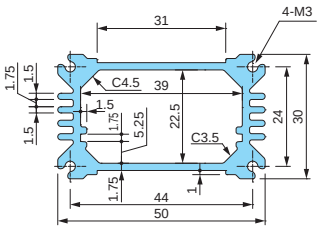


AW • AWN • AWP7-7-□
AWA6-6-□

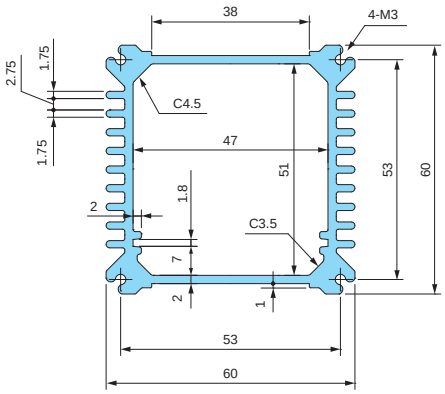


AW • AWN • AWP8-5-□
AWA8-4-□

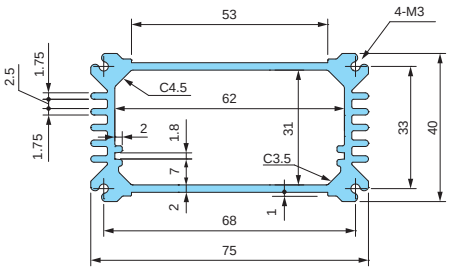


AW • AWN • AWP9-9-□
AWA8-8-□

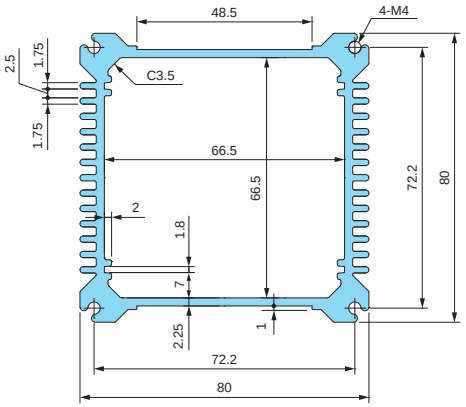


AW • AWN • AWP11-6-□
AWA10-5-□

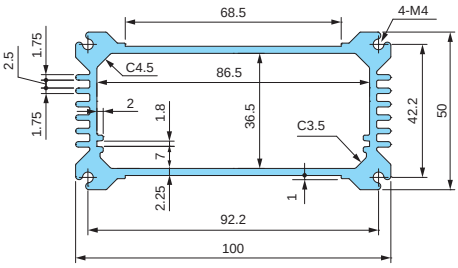


AW • AWN • AWP12-8-□
AWA12-7-□

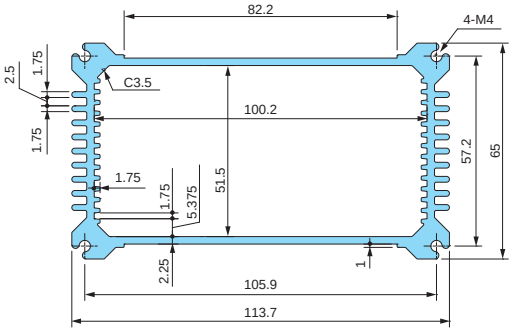

AW • AWN • AWP16-9-□
AWA15-8-□

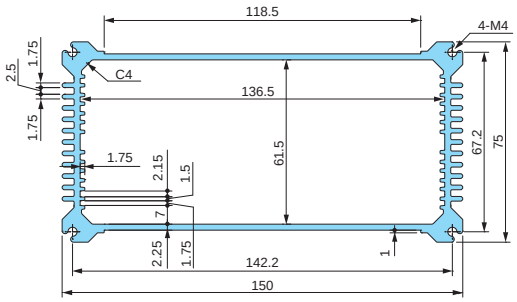


AW • AWN • AWP21-9-□
AWA20-8-□

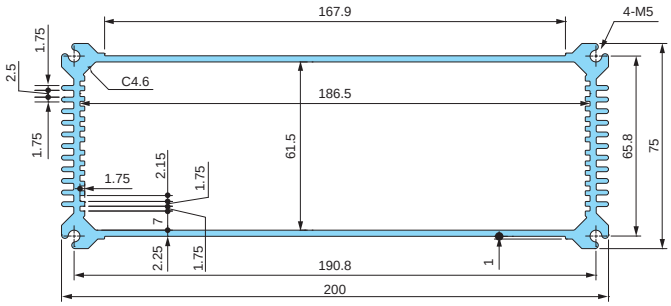


※ Thermal resistance test condition
- Ambient air cooling
- Heat-sink fins are set perpendicular to the ground with temperature at 60°C.
- Anodized aluminium extrusion
- Heat source is applied on the opposite side (inner side) of the fins.

| Product no. | | | | Frame length | ※Thermal resistance rate (°C/W) |
|---|---|---|---|---|---|
| AW 5-4- 7 | AWN 5-4- 7 | – | AWA 5-3- 5 | 49.2 | 11.2 |
| AW 5-4- 9 | AWN 5-4- 9 | – | AWA 5-3- 7 | 69.2 | 9.18 |
| AW 5-4-11 | AWN 5-4-11 | – | AWA 5-3-10 | 94.2 | 7.64 |
| AW 5-4-14 | AWN 5-4-14 | – | AWA 5-3-12 | 119.2 | 6.63 |
| AW 7-7- 8 | AWN 7-7- 8 | – | AWA 6-6- 7 | 64 | 4.41 |
| AW 7-7-11 | AWN 7-7-11 | – | AWA 6-6-10 | 94 | 3.5 |
| AW 7-7-15 | AWN 7-7-15 | – | AWA 6-6-14 | 134 | 2.83 |
| AW 7-7-20 | AWN 7-7-20 | – | AWA 6-6-19 | 184 | 2.33 |
| AW 7-7-25 | AWN 7-7-25 | – | AWA 6-6-24 | 234 | 2.02 |
| AW 8-5- 9 | AWN 8-5- 9 | AWP 8-5- 9 | AWA 8-4- 8 | 74 | 5.97 |
| AW 8-5-12 | AWN 8-5-12 | AWP 8-5-12 | AWA 8-4-10 | 99 | 5.01 |
| AW 8-5-14 | AWN 8-5-14 | AWP 8-5-14 | AWA 8-4-13 | 124 | 4.37 |
| AW 8-5-18 | AWN 8-5-18 | AWP 8-5-18 | AWA 8-4-16 | 159 | 3.76 |
| AW 9-9-10 | AWN 9-9-10 | AWP 9-9-10 | AWA 8-8- 9 | 81 | 3.1 |
| AW 9-9-13 | AWN 9-9-13 | AWP 9-9-13 | AWA 8-8-11 | 106 | 2.63 |
| AW 9-9-17 | AWN 9-9-17 | AWP 9-9-17 | AWA 8-8-16 | 151 | 2.12 |
| AW 9-9-22 | AWN 9-9-22 | AWP 9-9-22 | AWA 8-8-21 | 201 | 1.79 |
| AW 9-9-28 | AWN 9-9-28 | AWP 9-9-28 | AWA 8-8-26 | 256 | 1.54 |
| AW11-6-11 | AWN11-6-11 | AWP11-6-11 | AWA10-5-10 | 90.6 | 4.52 |
| AW11-6-15 | AWN11-6-15 | AWP11-6-15 | AWA10-5-14 | 130.6 | 3.62 |
| AW11-6-19 | AWN11-6-19 | AWP11-6-19 | AWA10-5-18 | 170.6 | 3.08 |
| AW11-6-24 | AWN11-6-24 | AWP11-6-24 | AWA10-5-23 | 220.6 | 2.64 |
| AW12-8-11 | AWN12-8-11 | AWP12-8-11 | AWA12-7-9 | 85.6 | 3.6 |
| AW12-8-14 | AWN12-8-14 | AWP12-8-14 | AWA12-7-12 | 120.6 | 2.93 |
| AW12-8-17 | AWN12-8-17 | AWP12-8-17 | AWA12-7-17 | 160.1 | 2.47 |
| AW12-8-22 | AWN12-8-22 | AWP12-8-22 | AWA12-7-20 | 195.6 | 2.18 |
| AW16-9-14 | AWN16-9-14 | AWP16-9-14 | AWA15-8-12 | 115.6 | 2.64 |
| AW16-9-18 | AWN16-9-18 | AWP16-9-18 | AWA15-8-16 | 155.6 | 2.2 |
| AW16-9-23 | AWN16-9-23 | AWP16-9-23 | AWA15-8-21 | 205.6 | 1.86 |
| AW16-9-28 | AWN16-9-28 | AWP16-9-28 | AWA15-8-26 | 255.6 | 1.63 |
| AW21-9-17 | AWN21-9-17 | AWP21-9-17 | AWA20-8-15 | 147.8 | 2.3 |
| AW21-9-21 | AWN21-9-21 | AWP21-9-21 | AWA20-8-19 | 187.8 | 1.99 |
| AW21-9-26 | AWN21-9-26 | AWP21-9-26 | AWA20-8-24 | 237.8 | 1.72 |
| AW21-9-31 | AWN21-9-31 | AWP21-9-31 | AWA20-8-29 | 287.8 | 1.54 |

# AWSP series SILICONE PROTECTOR for AWN

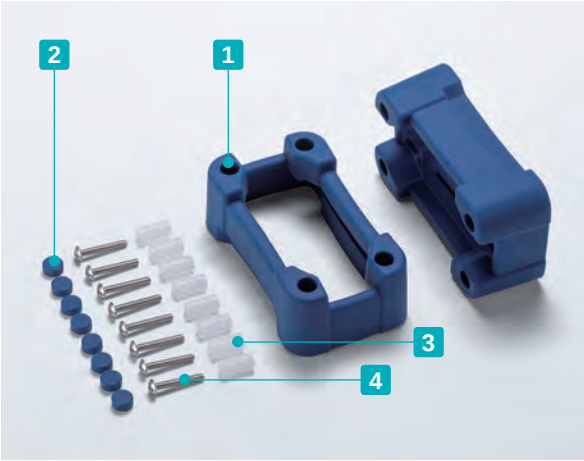


**Color Type**

| Code | B Black | G Gray | N Navy |
|---|---|---|---|
| Color | | | |

- Silicone protector for AWN series.
- Protect switches and/or connectors on end panels from impact when dropped, etc. Custom color is available from just 1 set. For 250 sets or more, manufacture costs will be similar to a standard color. Please inquire for more details. For custom color order, please specify **PANTONE**® color code.

## AWSP dimensions

- DXF/DWG/PDF drawings available on our website.

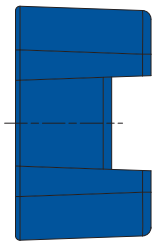

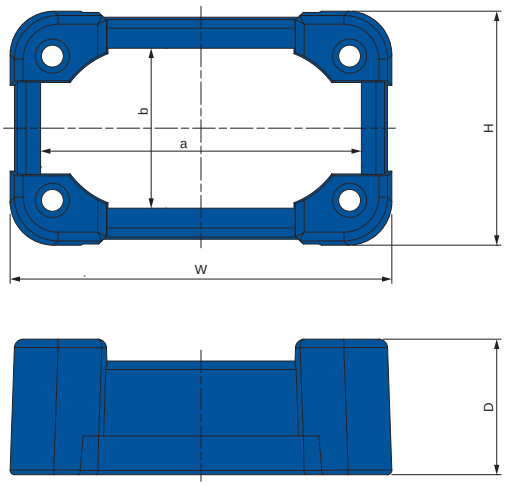


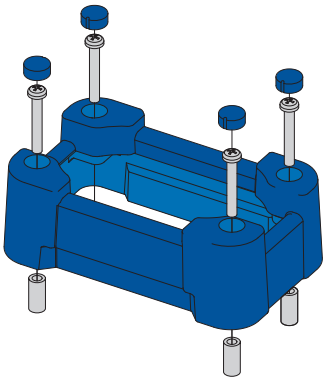

### Components

| No. | Part name | Pcs | Material | Color / Finish |
|---|---|---|---|---|
| 1 | Protector | 2 | Silicone | Black • Gray • Navy |
| 2 | Blind cap | 8 | Silicone | Black • Gray • Navy |
| 3 | Spacer | 8 | POM | White |
| 4 | Screw | 8 | Stainless steel | Unfinished |

### Product no. / Dimensions

- Please suffix color code at the end of the product number.

| Product no. | W | H | D | a | b | Screw size | Suitable models | Weight (g) |
|---|---|---|---|---|---|---|---|---|
| AWSP 8-5□ | 87.4 | 53.6 | 31 | 73.4 | 36.6 | M3 | AWN 8-5-□ | 100.5 |
| AWSP 9-9□ | 93.9 | 95.1 | 35.5 | 76.9 | 75.1 | M4 | AWN 9-9-□ | 184.5 |
| AWSP11-6□ | 113.9 | 65.1 | 35.5 | 96.9 | 45.1 | M4 | AWN11-6-□ | 186 |
| AWSP12-8□ | 127.6 | 80.1 | 35.5 | 110.6 | 60.1 | M4 | AWN12-8-□ | 201 |
| AWSP16-9□ | 163.9 | 90.1 | 35.5 | 145.9 | 69.1 | M4 | AWN16-9-□ | 235 |
| AWSP21-9□ | 213.9 | 90.1 | 39.5 | 192.9 | 66.1 | M5 | AWN21-9-□ | 333 |

# AWC series ALUMINIUM MOUNTING PLATE for AW • AWN • AWP • AWA

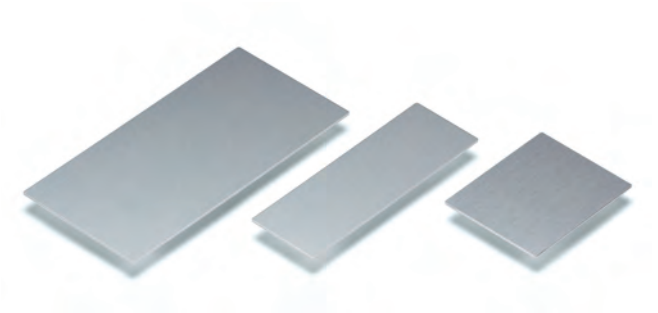

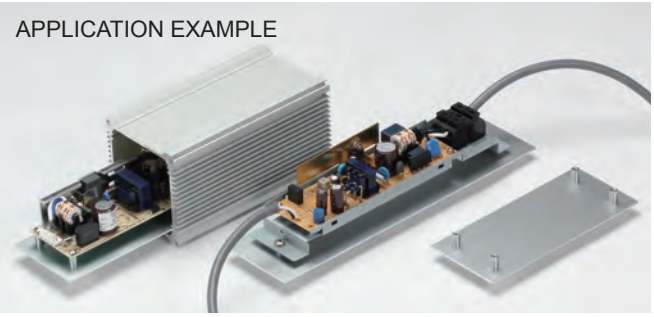


- Material: Aluminium A1050P t=1.5 / Silver anodized
- Mounting plate for AW, AWN, AWP, and AWA enclosures.
- Utilize for mounting PCB, power supply, terminal blocks, etc.

**Product no. / Dimensions**

| Product no. | W | D | Suitable models |
|---|---|---|---|
| AWC 5- 7 | 38.9 | 49.2 | AW • AWN 5-4- 7 • AWA 5-3- 5 |
| AWC 5- 9 | 38.9 | 69.2 | AW • AWN 5-4- 9 • AWA 5-3- 7 |
| AWC 5-11 | 38.9 | 94.2 | AW • AWN 5-4-11 • AWA 5-3-10 |
| AWC 5-14 | 38.9 | 119.2 | AW • AWN 5-4-14 • AWA 5-3-12 |
| AWC 7- 8 | 47 | 64 | AW • AWN • AWP 7-7- 8 • AWA 6-6- 7 |
| AWC 7-11 | 47 | 94 | AW • AWN • AWP 7-7-11 • AWA 6-6-10 |
| AWC 7-15 | 47 | 134 | AW • AWN • AWP 7-7-15 • AWA 6-6-14 |
| AWC 7-20 | 47 | 184 | AW • AWN • AWP 7-7-20 • AWA 6-6-19 |
| AWC 7-25 | 47 | 234 | AW • AWN • AWP 7-7-25 • AWA 6-6-24 |
| AWC 8- 9 | 61.8 | 74 | AW • AWN • AWP 8-5- 9 • AWA 8-4- 8 |
| AWC 8-12 | 61.8 | 99 | AW • AWN • AWP 8-5-12 • AWA 8-4-10 |
| AWC 8-14 | 61.8 | 124 | AW • AWN • AWP 8-5-14 • AWA 8-4-13 |
| AWC 8-18 | 61.8 | 159 | AW • AWN • AWP 8-5-18 • AWA 8-4-16 |
| AWC 9-10 | 66.5 | 81 | AW • AWN • AWP 9-9-10 • AWA 8-8- 9 |
| AWC 9-13 | 66.5 | 106 | AW • AWN • AWP 9-9-13 • AWA 8-8-11 |
| AWC 9-17 | 66.5 | 151 | AW • AWN • AWP 9-9-17 • AWA 8-8-16 |
| AWC 9-22 | 66.5 | 201 | AW • AWN • AWP 9-9-22 • AWA 8-8-21 |
| AWC 9-28 | 66.5 | 256 | AW • AWN • AWP 9-9-28 • AWA 8-8-26 |
| AWC11-11 | 86.5 | 90.6 | AW • AWN • AWP11-6-11 • AWA10-5-10 |
| AWC11-15 | 86.5 | 130.6 | AW • AWN • AWP11-6-15 • AWA10-5-14 |
| AWC11-19 | 86.5 | 170.6 | AW • AWN • AWP11-6-19 • AWA10-5-18 |
| AWC11-24 | 86.5 | 220.6 | AW • AWN • AWP11-6-24 • AWA10-5-23 |
| AWC12-11 | 100.2 | 85.6 | AW • AWN • AWP12-8-11 • AWA12-7- 9 |
| AWC12-14 | 100.2 | 120.6 | AW • AWN • AWP12-8-14 • AWA12-7-12 |
| AWC12-17 | 100.2 | 160.1 | AW • AWN • AWP12-8-17 • AWA12-7-17 |
| AWC12-22 | 100.2 | 195.6 | AW • AWN • AWP12-8-22 • AWA12-7-20 |
| AWC16-14 | 136.3 | 115.6 | AW • AWN • AWP16-9-14 • AWA15-8-12 |
| AWC16-18 | 136.3 | 155.6 | AW • AWN • AWP16-9-18 • AWA15-8-16 |
| AWC16-23 | 136.3 | 205.6 | AW • AWN • AWP16-9-23 • AWA15-8-21 |
| AWC16-28 | 136.3 | 255.6 | AW • AWN • AWP16-9-28 • AWA15-8-26 |
| AWC21-17 | 186.1 | 147.8 | AW • AWN • AWP21-9-17 • AWA20-8-15 |
| AWC21-21 | 186.1 | 187.8 | AW • AWN • AWP21-9-21 • AWA20-8-19 |
| AWC21-26 | 186.1 | 237.8 | AW • AWN • AWP21-9-26 • AWA20-8-24 |
| AWC21-31 | 186.1 | 287.8 | AW • AWN • AWP21-9-31 • AWA20-8-29 |

## AWC dimensions

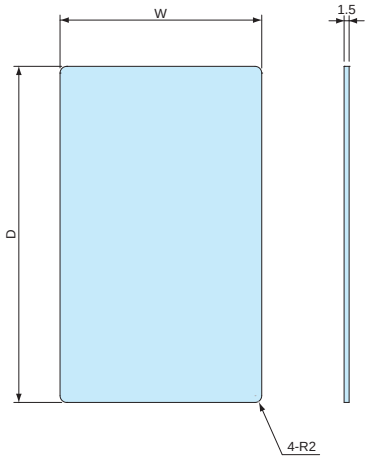


- DXF/DWG/PDF drawings available on our website.

# HCS series HEXAGON SOCKET HEAD SCREW for AW • AWN

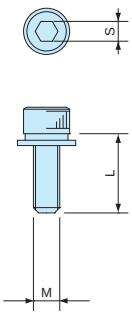


- Hexagon socket head screws for fastening the end panels of AW and AWN enclosures.
- Utilize for tamper-resistance functionality or for an elegant sleek look.

**Product no. / Dimensions**

| Product no. | M | L | S | Material | Pack of |
|---|---|---|---|---|---|
| HCS3-12S | 3 | 12 | 2.5 | Stainless steel | 8 |
| HCS4-12S | 4 | 12 | 3 | Stainless steel | 8 |
| HCS5-12S | 5 | 12 | 4 | Stainless steel | 8 |

# BDN series IP67 DIECAST ALUMINIUM BOX

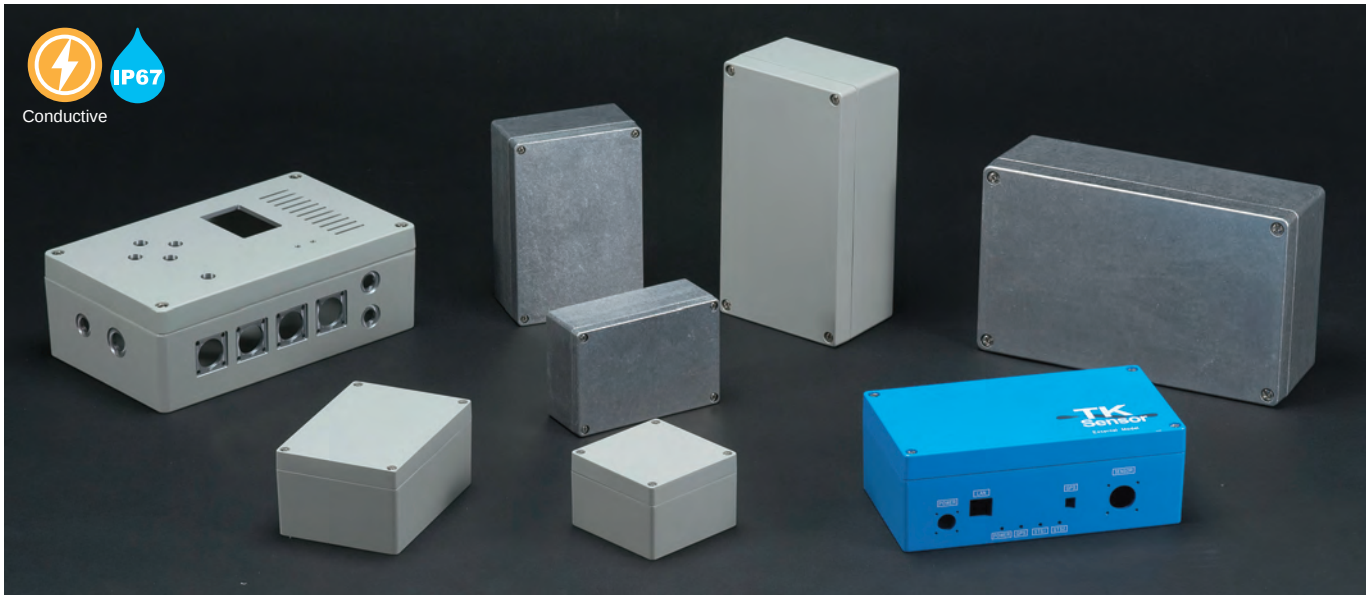


**Technical Data**

Protection class: IP67
Operating temperature: -40°C ~ +105°C
Recommended torque: 1.0N • m (10kgf • cm)

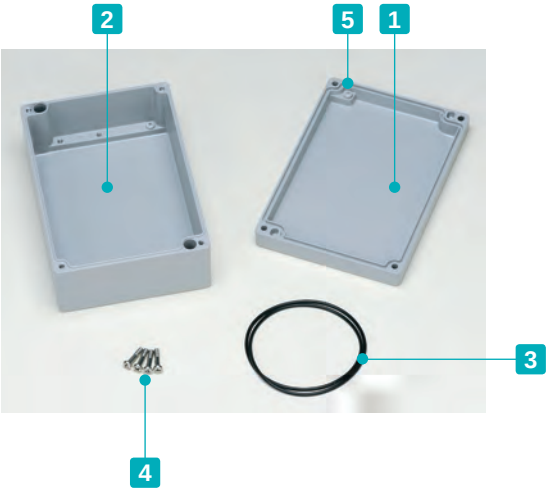


- 8 different sizes available for both light gray powder coated and unfinished models.
- O-ring gasket is good for maintaining both waterproof and dustproof functionality.
- Shock resistant diecast aluminium box.
- Conductivity can be achieved by utilization of the contact between the unfinished inner surfaces (only applicable to "N" type).

**Components**

| No. | Part name | Pcs | Material | Color / Finish |
|---|---|---|---|---|
| 1 | Top cover | 1 | Diecast aluminium ADC12 | Light gray / Powder coated • Natural / Unfinished |
| 2 | Base | 1 | Diecast aluminium ADC12 | Light gray / Powder coated • Natural / Unfinished |
| 3 | O-ring gasket | 1 | Silicone | Black |
| 4 | Screw | 4 | Stainless steel | Unfinished |
| 5 | Earthing screw | 2 | Steel M4-5 pan head | Nickel plated |

## Accessories (Optional parts)

Wall mounting bracket CK series
See website

Mounting plate FTB series
See website

Pole mounting bracket SSK series
See website

DIN-Rail FDR series
See website

Cable gland
See page 333 ~ 340

## BDN dimensions

■ DXF/DWG/PDF drawings available on our website.

BDN 6-8-5

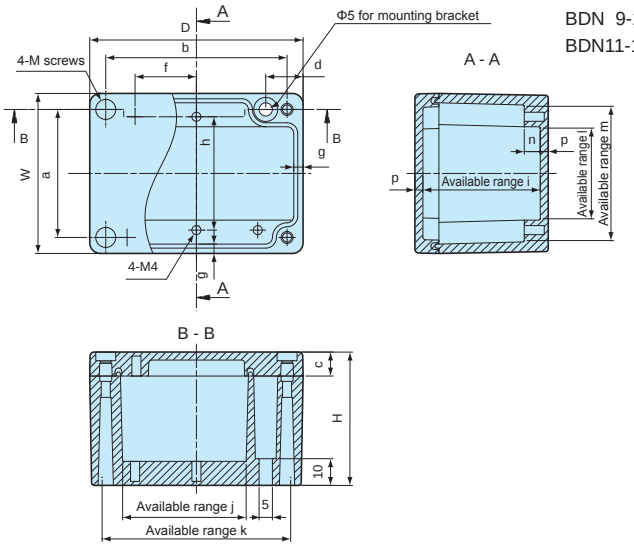


BDN 7-10-4
BDN 9-13-5
BDN11-16-6

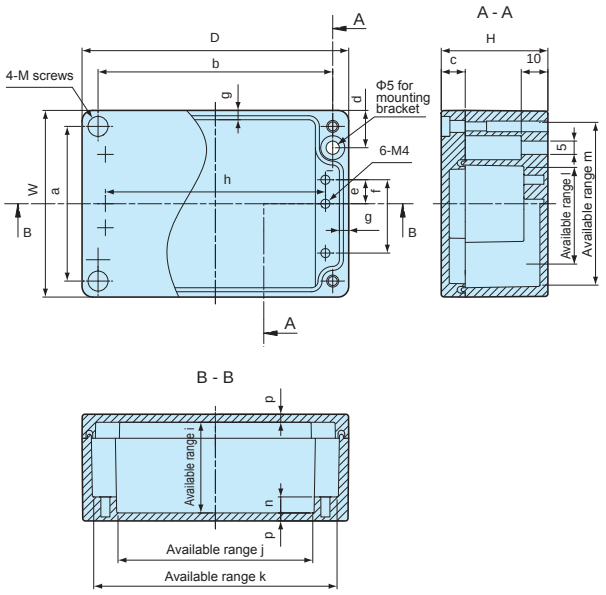


BDN 9- 9-6
BDN10-14-7
BDN12-22-8
BDN16-26-9

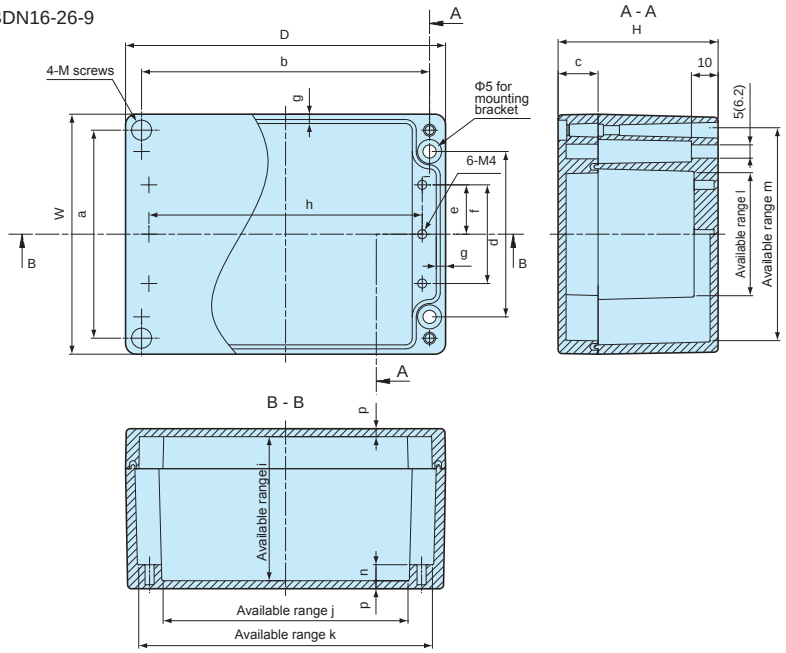


※Dimension in ( ) = BDN12-22-8
BDN16-26-9

### Product no. / Dimensions

| Product no. | | Dimensions | | | | | | Weight (g) |
|---|---|---|---|---|---|---|---|---|
| ● Light gray | ○ Natural Conductive | W | D | H | a | b | c | |
| BDN 6- 8-5G | BDN 6- 8-5N | 60 | 80 | 50 | 48 | 68 | 9 | 240 |
| BDN 7-10-4G | BDN 7-10-4N | 70 | 100 | 40 | 58 | 88 | 9 | 250 |
| BDN 9- 9-6G | BDN 9- 9-6N | 90 | 90 | 60 | 78 | 78 | 15 | 395 |
| BDN 9-13-5G | BDN 9-13-5N | 90 | 130 | 50 | 78 | 118 | 9 | 420 |
| BDN10-14-7G | BDN10-14-7N | 100 | 140 | 70 | 88 | 128 | 15 | 635 |
| BDN11-16-6G | BDN11-16-6N | 110 | 160 | 60 | 98 | 148 | 15 | 640 |
| BDN12-22-8G | BDN12-22-8N | 120 | 220 | 80 | 105 | 205 | 20 | 1,155 |
| BDN16-26-9G | BDN16-26-9N | 160 | 260 | 90 | 140 | 240 | 20 | 2,145 |

| Product no. | | Dimensions | | | | | | | | | | | | |
|---|---|---|---|---|---|---|---|---|---|---|---|---|---|---|
| ● Light gray | ○ Natural Conductive | d | e | f | g | h | i | j | k | ℓ | m | n | p | M |
| BDN 6- 8-5G | BDN 6- 8-5N | 14 | – | 23 | 3.5 | 42.5 | 44 | 45 | 71 | 33 | 51 | 6 | 3 | M4 |
| BDN 7-10-4G | BDN 7-10-4N | 14 | 11 | 31 | 3 | 85 | 34 | 75 | 92.5 | 38 | 62.5 | 6 | 3 | M4 |
| BDN 9- 9-6G | BDN 9- 9-6N | 62 | 18.5 | 37 | 3.5 | 72 | 54 | 62 | 80 | 45 | 80 | 6 | 3 | M4 |
| BDN 9-13-5G | BDN 9-13-5N | 14 | 19 | 47.5 | 3.5 | 112.5 | 44 | 104 | 121 | 56 | 81 | 6 | 3 | M4 |
| BDN10-14-7G | BDN10-14-7N | 72 | 24 | 48 | 3.5 | 121 | 64 | 111 | 130 | 56 | 90 | 6 | 3 | M4 |
| BDN11-16-6G | BDN11-16-6N | 14 | 29 | 67.5 | 3.5 | 142.5 | 54 | 134 | 151 | 76 | 101 | 6 | 3 | M4 |
| BDN12-22-8G | BDN12-22-8N | 84.6 | 28 | 56 | 3.9 | 196 | 74 | 183 | 206 | 62 | 105 | 6 | 3 | M5 |
| BDN16-26-9G | BDN16-26-9N | 110 | 36 | 72 | 4.8 | 230 | 82 | 216 | 247 | 87 | 146 | 9 | 4 | M6 |

# FTB SERIES

## MOUNTING PLATE for BDN

FTB 5-7

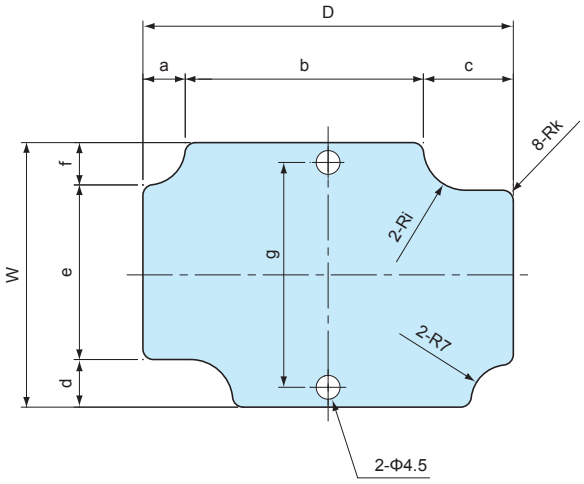


FTB 6-9

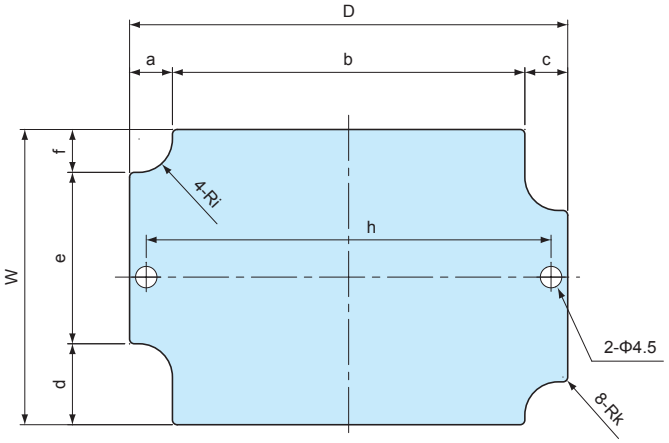


FTB 8-12
FTB10-15

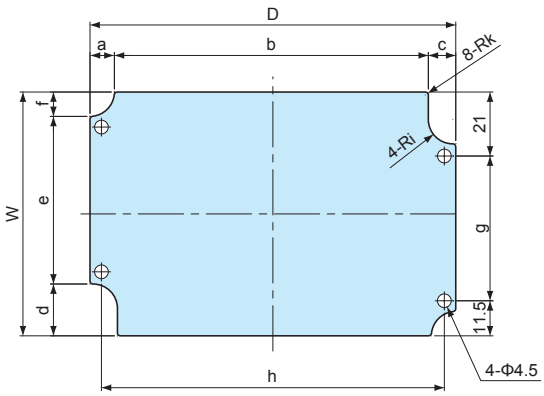


FTB 8- 8 FTB10-20
FTB 9-13 FTB14-24

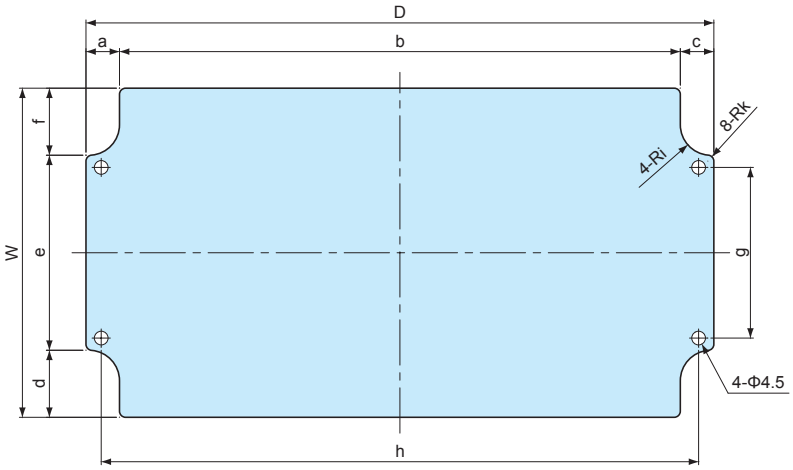


| Material | Color / Finish |
|---|---|
| Aluminium A1050P t = 1.5 | Silver / Anodized |

### Product no. / Dimensions

| Product no. | Suiteble box | W | D | a | b | c | d | e | f | g | h | i | k |
|---|---|---|---|---|---|---|---|---|---|---|---|---|---|
| FTB 5- 7 | BDN 6- 8-5 | 50 | 70 | 8 | 45 | 17 | 9 | 33 | 8 | 42.5 | – | 8 | 2 |
| FTB 6- 9 | BDN 7-10-4 | 62 | 92 | 9 | 74 | 9 | 17 | 36 | 9 | – | 85 | 7 | 1 |
| FTB 8- 8 | BDN 9- 9-6 | 80 | 80 | 9 | 62 | 9 | 17 | 46 | 17 | 37 | 72.5 | 8 | 2 |
| FTB 8-12 | BDN 9-13-5 | 80 | 120 | 8 | 103 | 9 | 17 | 55 | 8 | 47.5 | 112.5 | 8 | 1 |
| FTB 9-13 | BDN10-14-7 | 89 | 129 | 9 | 111 | 9 | 17 | 55 | 17 | 48 | 121 | 8.5 | 2 |
| FTB10-15 | BDN11-16-6 | 100 | 150 | 8 | 133 | 9 | 17 | 75 | 8 | 67.5 | 142.5 | 8 | 1 |
| FTB10-20 | BDN12-22-8 | 108 | 206 | 11 | 184 | 11 | 22 | 64 | 22 | 56 | 196 | 10 | 2 |
| FTB14-24 | BDN16-26-9 | 144 | 244 | 15 | 214 | 15 | 30 | 84 | 30 | 72 | 230 | 12 | 3 |

# FDR SERIES DIN-RAIL

NEW SIZE

- DIN rail for installation of terminals, relays or switches inside enclosures.
- Available in different models and lengths to fit a wide variety of mounting boss pitch.
- FDR-1000 is available if customized length is required.

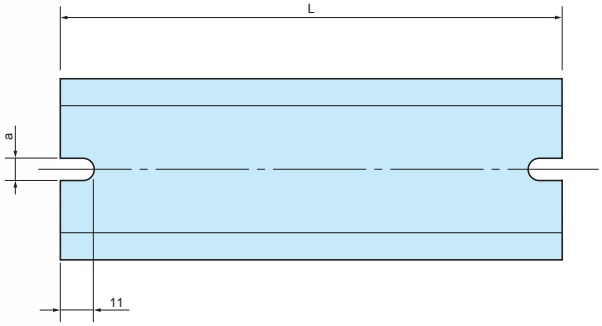


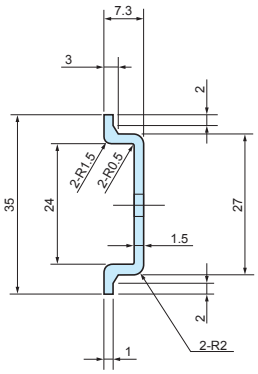


## Feature

| Material | Finish |
|---|---|
| Extruded Aluminium A6063S-T5 | Silver anodized |

## Product no. / Dimensions

| Product no. | L | a | Matching boss pitch |
|---|---|---|---|
| FDR- 50 | 50 | 4.2 | 32 ~ 42 |
| 57 | 57 | 4.2 | 39 ~ 49 |
| 66 | 66 | 4.2 | 48 ~ 58 |
| 77 | 77 | 4.2 | 59 ~ 69 |
| 80 | 80 | 4.2 | 62 ~ 72 |
| 87 | 87 | 4.2 | 69 ~ 79 |
| 92 | 92 | 4.2 | 74 ~ 84 |
| 100 | 100 | 4.2 | 82 ~ 92 |
| 106 | 106 | 4.2 | 88 ~ 98 |
| 110 | 110 | 4.2 | 92 ~ 102 |
| 120 | 120 | 4.2 | 102 ~ 112 |
| 128 | 128 | 4.2 | 110 ~ 120 |
| 137 | 137 | 4.2 | 119 ~ 129 |
| 142 | 142 | 4.2 | 124 ~ 134 |
| 146 | 146 | 4.2 | 128 ~ 138 |
| 150 | 150 | 4.2 | 132 ~ 142 |
| 168 | 168 | 4.2 | 150 ~ 160 |
| 170 | 170 | 4.2 | 152 ~ 162 |
| 186 | 186 | 4.2 | 168 ~ 178 |
| 202 | 202 | 4.2 | 184 ~ 194 |
| 205 | 205 | 4.2 | 187 ~ 197 |
| 223 | 223 | 4.2 | 205 ~ 215 |
| 226 | 226 | 4.2 | 208 ~ 218 |
| 235 | 235 | 4.2 | 217 ~ 227 |
| 242 | 242 | 4.2 | 224 ~ 234 |
| 249 | 249 | 4.2 | 231 ~ 241 |
| 283 | 283 | 4.2 | 265 ~ 275 |
| 300 | 300 | 4.2 | 282 ~ 292 |
| 350 | 350 | 4.2 | 332 ~ 342 |
| 450 | 450 | 4.2 | 432 ~ 442 |
| 550 | 550 | 4.2 | 532 ~ 542 |

| Product no. | L | a | Matching boss pitch |
|---|---|---|---|
| FDR-B102 | 102 | 6.5 | 86 ~ 92 |
| NEW B124 | 124 | 6.5 | 108 ~ 114 |
| B142 | 142 | 6.5 | 126 ~ 132 |
| B160 | 160 | 6.5 | 144 ~ 150 |
| B165 | 165 | 6.5 | 149 ~ 155 |
| B176 | 176 | 6.5 | 160 ~ 166 |
| B183 | 183 | 6.5 | 167 ~ 173 |
| B223 | 223 | 6.5 | 207 ~ 213 |
| B260 | 260 | 6.5 | 244 ~ 250 |
| B283 | 283 | 6.5 | 267 ~ 273 |
| B303 | 303 | 6.5 | 287 ~ 293 |
| B338 | 338 | 6.5 | 322 ~ 328 |
| B360 | 360 | 6.5 | 344 ~ 350 |
| B376 | 376 | 6.5 | 360 ~ 366 |
| B383 | 383 | 6.5 | 367 ~ 373 |
| B463 | 463 | 6.5 | 447 ~ 453 |
| B560 | 560 | 6.5 | 544 ~ 550 |
| B623 | 623 | 6.5 | 607 ~ 613 |
| | | | |
| FDR-1000 | 1000 | – | – |

- FDR-1000 does not have mounting holes.

Matching DIN-Rail Chart

BC□□ series

| Product no. | | Matching DIN-Rail |
|---|---|---|
| BCAP<br>BCPC<br>BCPK<br>BCAR<br>BCPR | 091207 | FDR - 80 |
| | 091208 | 80 |
| | 101507 | 110 |
| | 101508 | 110 |
| | 112107 | 170 |
| | 112110 | 170 |
| | 112607 | 223 |
| | 112610 | 223 |
| | 131508 | 120 |
| | 131808 | 150 |
| | 131810 | 150 |
| | 151509 | 120 |
| | 151512 | 120 |
| | 162110 | 170 |
| | 162113 | 170 |
| | 162610 | 223 |
| | 162613 | 223 |
| | 172211 | 170 |
| | 172711 | 223 |

BDN series

| Product no. | | Matching DIN-Rail |
|---|---|---|
| BDN | 6- 8- 5 | FDR - 50 |
| | 7-10- 4 | – |
| | 9- 9- 6 | FDR - 80 |
| | 9-13- 5 | 120 |
| | 10-14- 7 | 128 |
| | 11-16- 6 | 150 |
| | 12-22- 8 | 205 |
| | 16-26- 9 | 242 |

BCAS series

| Product no. | | Matching DIN-Rail |
|---|---|---|
| BCAS | 071005 | FDR - 92 |
| | 080806 | 66 |
| | 081104 | 92 |
| | 081107 | 92 |
| | 081108 | 92 |
| | 081110 | 92 |
| | 081307 | 110 |
| | 081308 | 110 |
| | 081807 | 168 |
| | 081808 | 168 |
| | 082507 | 235 |
| | 082508 | 235 |
| | 101007 | 77 |
| | 101010 | 77 |
| | 101807 | 150 |
| | 102007 | 170 |
| | 102307 | 202 |
| | 121207 | 80 |
| | 121210 | 80 |
| | 141709 | 146 |
| | 142309 | 205 |
| | 151507 | 120 |
| | 151510 | 120 |
| | 152004 | 170 |
| | 152007 | 170 |
| | 152010 | 170 |
| | 152013 | 170 |
| | 152016 | 170 |
| | 152510 | 226 |
| | 152513 | 226 |
| | 161607 | 137 |

SPCM • SPCP series

| Product no. | | Matching DIN-Rail |
|---|---|---|
| SPCM<br>SPCP | 081304 | FDR - 50/100 |
| | 081305 | 50/100 |
| | 081306 | 50/100 |
| | 081308 | 50/100 |
| | 081310 | 50/100 |
| | 081313 | 50/100 |
| | 101004 | 80 |
| | 101006 | 80 |
| | 131304 | 100 |
| | 131305 | 100 |
| | 131306 | 100 |
| | 131308 | 100 |
| | 131310 | 100 |
| | 131313 | 100 |
| | 131804 | 100/150 |
| | 131805 | 100/150 |
| | 131806 | 100/150 |
| | 131808 | 100/150 |
| | 131810 | 100/150 |
| | 131813 | 100/150 |
| | 131815 | 100/150 |
| | 181808 | 150 |
| | 181810 | 150 |
| | 181813 | 150 |
| | 181815 | 150 |
| | 182508 | 150/223 |
| | 182510 | 150/223 |
| | 182515 | 150/223 |

## Accessories (Optional parts)

DIN-Rail stopper bracket TKR series
See page DIN-ACC-2

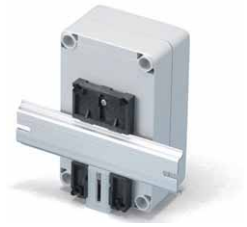

DIN-Rail mounting base DRA series
See page DIN-ACC-1

DIN-Rail mounting base DRT series
See page DIN-ACC-1

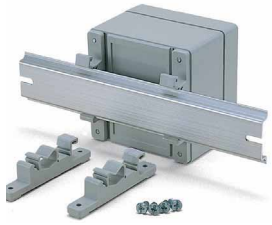

DIN-Rail mounting feet CKD series
See page DIN-ACC-2

# DRA series DIN-RAIL MOUNTING BASE

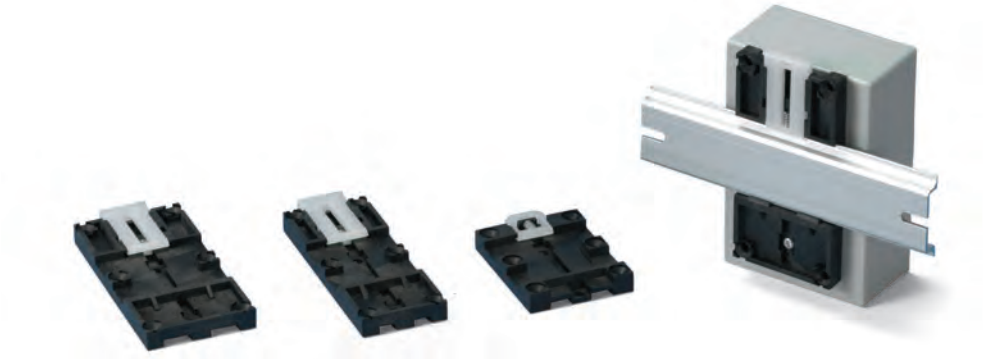

■ For installation of enclosures, PCB and other parts onto a DIN rail.
■ Simple installation and removal via the pull lever.

■ **NOTE**

Before installation, please ensure that the lever is not fully hidden behind the enclosure

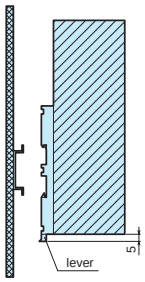


| Technical Data |
|---|
| Max load : 5kg |

## DRA dimensions

DRA-1

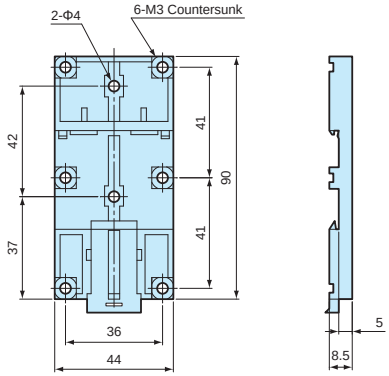


DRA-2

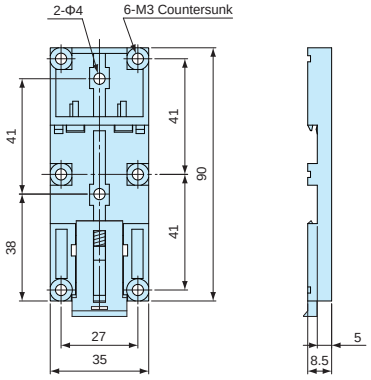


DRA-3

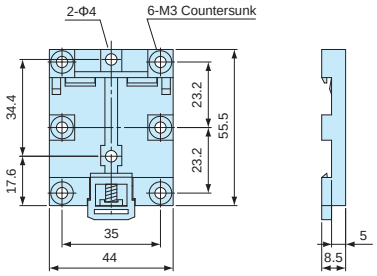


■ DXF/DWG/PDF drawings available on our website.

**Product no. / Dimensions**

| Product no. | Material (body) | Material (lever) | Color | Weight (g) |
|---|---|---|---|---|
| DRA-1 | PPE : SB UL94V-1 | Nylon 66 UL94V-2 | Black : White | 16.4 |
| DRA-2 | PPE : SB UL94V-1 | Nylon 66 UL94V-2 | Black : White | 14.5 |
| DRA-3 | PPE : SB UL94V-1 | Nylon 66 UL94V-2 | Black : White | 10.4 |

# DRT series DIN-RAIL MOUNTING BASE

## DRT dimensions

■ DXF/DWG/PDF drawings available on our website.

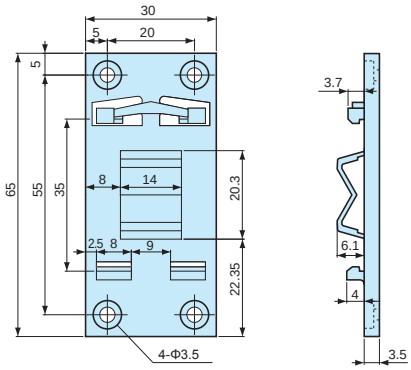


■ **NOTE**

Before installation, please ensure that the length (from top) of the enclosure is equal to, or less than 100mm from the center of the mounting base.

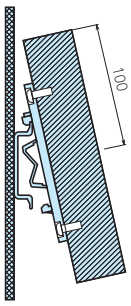


■ For installation of enclosures, PCB and other parts onto a DIN rail.
■ Simple installation and removal by tilting the case at an angle and sliding it in/out.

| Technical Data |
|---|
| Max load : 1kg<br>Operating temperature: -20°C ~ +70°C |

**Product no. / Dimensions**

| Product no. | Material | Color | Weight (g) |
|---|---|---|---|
| DRT-1 | PC/ABS UL94V-0 | Light gray | 7.3 |

## CKD SERIES DIN-RAIL MOUNTING FEET

Installation example

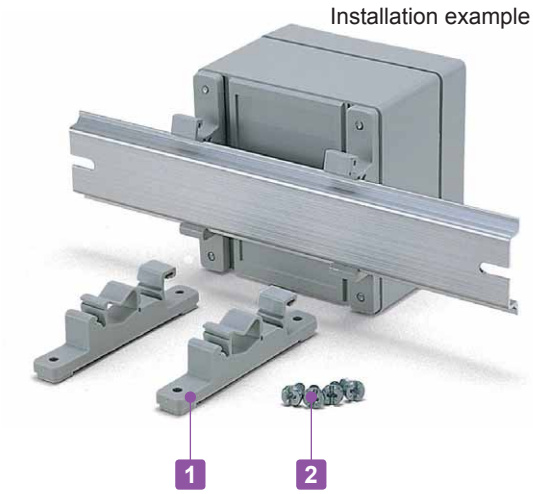


■ DXF/DWG/PDF drawings available on our website.

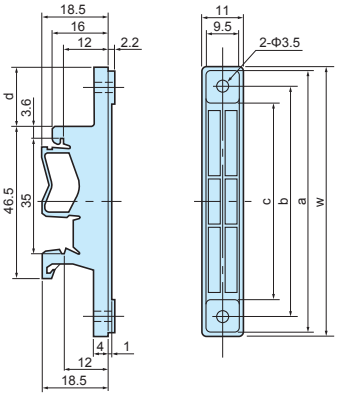


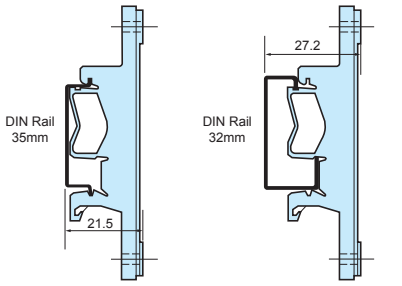


■ Mounting feet for installation of enclosures, PCB and other parts onto a DIN rail. Can be easily detached.

| Technical Data |
|---|
| Max load : 3kg |

### Components

| No. | Part name | Pcs | Material | Color / Finish |
|---|---|---|---|---|
| 1 | Mounting feet | 2 | Polyamide | White gray |
| 2 | Screw (special type 4.2 x 9.5) | 4 | Screw | Unichrome plated |

### Product no. / Dimensions

| Product no. | W | a | b | c | d | Pack of |
|---|---|---|---|---|---|---|
| CKD- 80 | 77 | 75 | 66 | 56 | 17 | 2 |
| CKD-120 | 117 | 115 | 106 | 96 | 37 | 2 |
| CKD-160 | 157 | 155 | 147 | 136 | 57 | 2 |

## TKR SERIES DIN-RAIL TERMINAL BLOCKS END STOPPER

■ DXF/DWG/PDF drawings available on our website.

TKR-TWE1

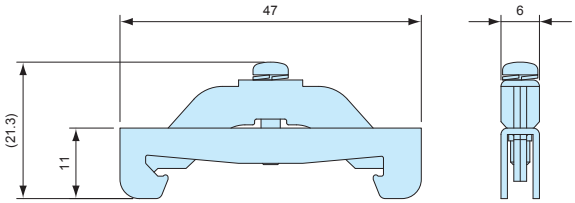


TKR-JTXE3

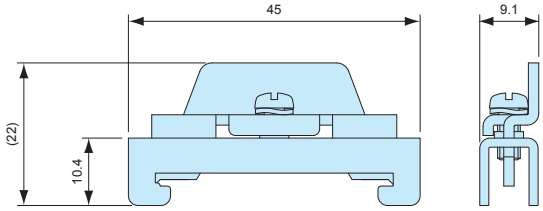


■ Stopper bracket for use with 35mm DIN-rail to keep an attachment at a fixed location.

■ TKR-TWE1 is used with small DIN rail attachment parts. For larger/ higher attachment parts, TKR-JTXE3 is recommended for providing additional support.

### Product no. / Feature

| Product no. | Material | Color / Finish | Pack of |
|---|---|---|---|
| TKR-TWE1 | Steel sheet | Trivalent chromate | 2 |
| TKR-JTXE3 | Steel sheet | Trivalent chromate | 2 |

# HQ SERIES IP67 EMC SHIELDED DIECAST ALUMINIUM BOX

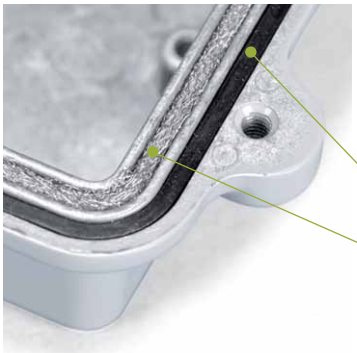


| Technical Data |
| --- |
| Protection class : IP67<br>Operating temperature : -40°C ~ +105°C<br>Recommended torque : 1N • m |

- A double gasket construction allows both IP67 protection and EMC shielding to be possible.
- 13 different sizes available with 2 different finish types.
- Suitable for CATV terminal, fiber optic transmitter, FA controller, and so on.
- Available in powder coated model and unfinished model.

## APPLICATION EXAMPLE

### CATV OPTICAL NODE

### LPWA OUTDOOR GATEWAY

### WIFI ACCESS POINT

## Accessories (Optional parts)

Mounting bracket HQF series
See page HQ-7

Pole Mounting bracket SSK series
See page SSK-M-1 ~ SSK-M-3

Mounting plate HQP series
See page HQ-8

Mountng screw MT series
See page HQ-7

Cable gland
See cable gland pages

Protective vent PMF series
See PMF pages

Product no. / Dimensions

| Product no. | | Dimensions | | | Weight (g) |
|---|---|---|---|---|---|
| ● Light gray | ○ Unfinished | W | D | H | |
| HQ10-10- 5G | HQ10-10- 5N | 96.3 | 96.8 | 45 | 302 |
| HQ10-10- 7G | HQ10-10- 7N | 96.8 | 96.8 | 67 | 335 |
| HQ15-10- 5G | HQ15-10- 5N | 150 | 100 | 50 | 442 |
| HQ15-10- 8G | HQ15-10- 8N | 150 | 99.5 | 75 | 494 |
| HQ16-16- 6G | HQ16-16- 6N | 162 | 162 | 55 | 626 |
| HQ16-16- 8G | HQ16-16- 8N | 162 | 162 | 80 | 715 |
| HQ19-10- 5G | HQ19-10- 5N | 192 | 96 | 45 | 507 |
| HQ19-10- 7G | HQ19-10- 7N | 192 | 96 | 67 | 590 |
| HQ20-15- 5G | HQ20-15- 5N | 200 | 150 | 50 | 753 |
| HQ20-15- 8G | HQ20-15- 8N | 200 | 150 | 75 | 849 |
| HQ26-18- 6G | HQ26-18- 6N | 262 | 181.5 | 55 | 961 |
| HQ27-17- 7G | HQ27-17- 7N | 274.2 | 173.2 | 66 | 1,129 |
| HQ27-17-10G | HQ27-17-10N | 274.2 | 172.7 | 100 | 1,287 |

## HQ dimensions

HQ10-10-5
HQ10-10-7

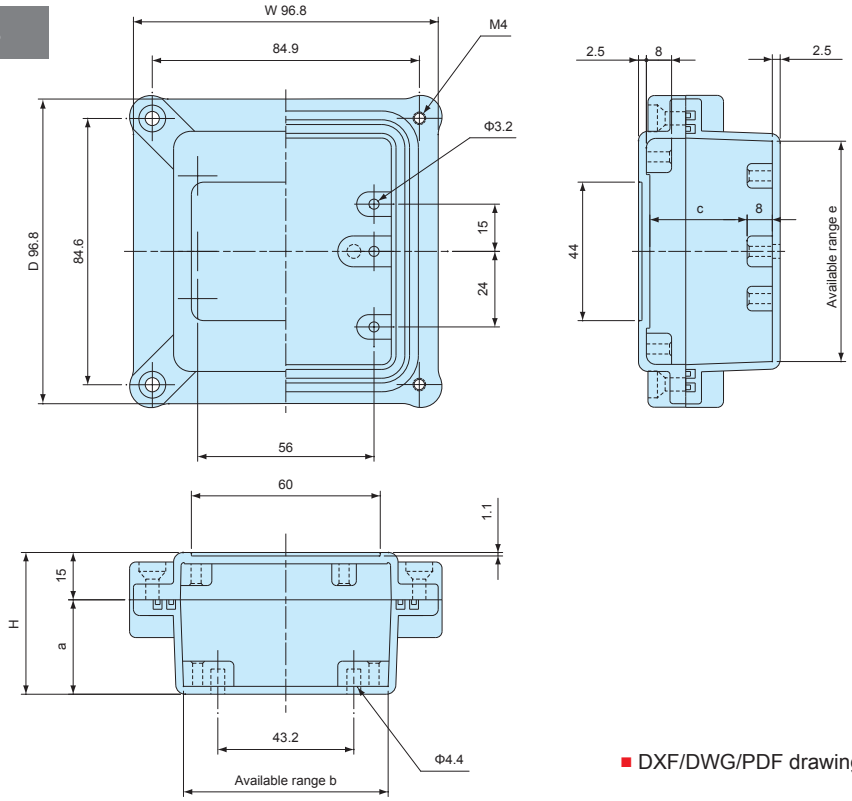


■ DXF/DWG/PDF drawings available on our website.

| Product no. | W | D | H | a | b | c | e |
|---|---|---|---|---|---|---|---|
| HQ10-10- 5 | 96.3 | 96.8 | 45 | 30 | 64 | 30.9 | 69 |
| HQ10-10- 7 | 96.8 | 96.8 | 67 | 52 | 64 | 52.9 | 69 |

## HQ dimensions

■ DXF/DWG/PDF drawings available on our website.

HQ15-10-5
HQ15-10-8

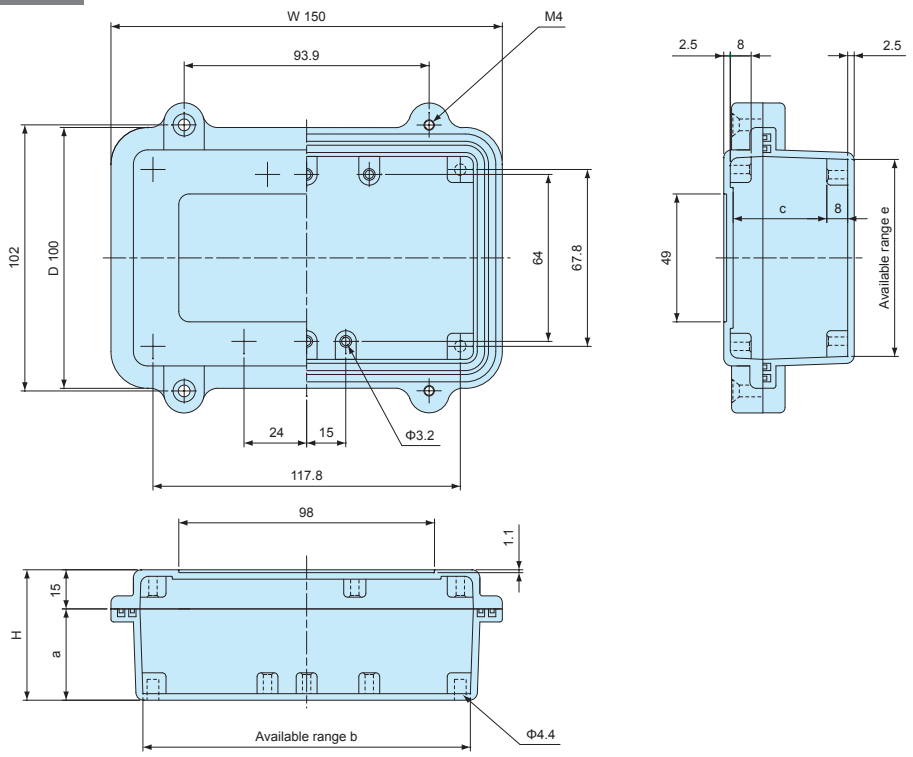


| Product no. | W | D | H | a | b | c | e |
|---|---|---|---|---|---|---|---|
| HQ15-10- 5 | 150 | 100 | 50 | 35 | 125.5 | 35.9 | 75.5 |
| HQ15-10- 8 | 150 | 99.5 | 75 | 60 | 123.7 | 60.9 | 73.7 |

HQ16-16-6
HQ16-16-8

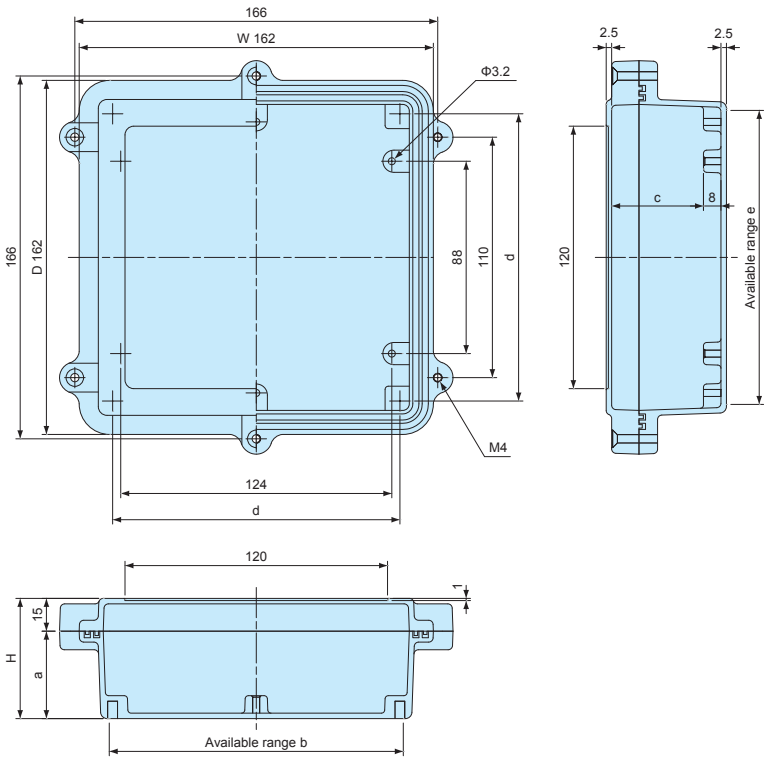


| Product no. | W | D | H | a | b | c | d | e |
|---|---|---|---|---|---|---|---|---|
| HQ16-16- 6 | 162 | 162 | 55 | 40 | 134.5 | 42 | 131.41 | 134.5 |
| HQ16-16- 8 | 162 | 162 | 80 | 65 | 132.7 | 67 | 129.66 | 132.7 |

## HQ dimensions

■ DXF/DWG/PDF drawings available on our website.

HQ19-10-5
HQ19-10-7

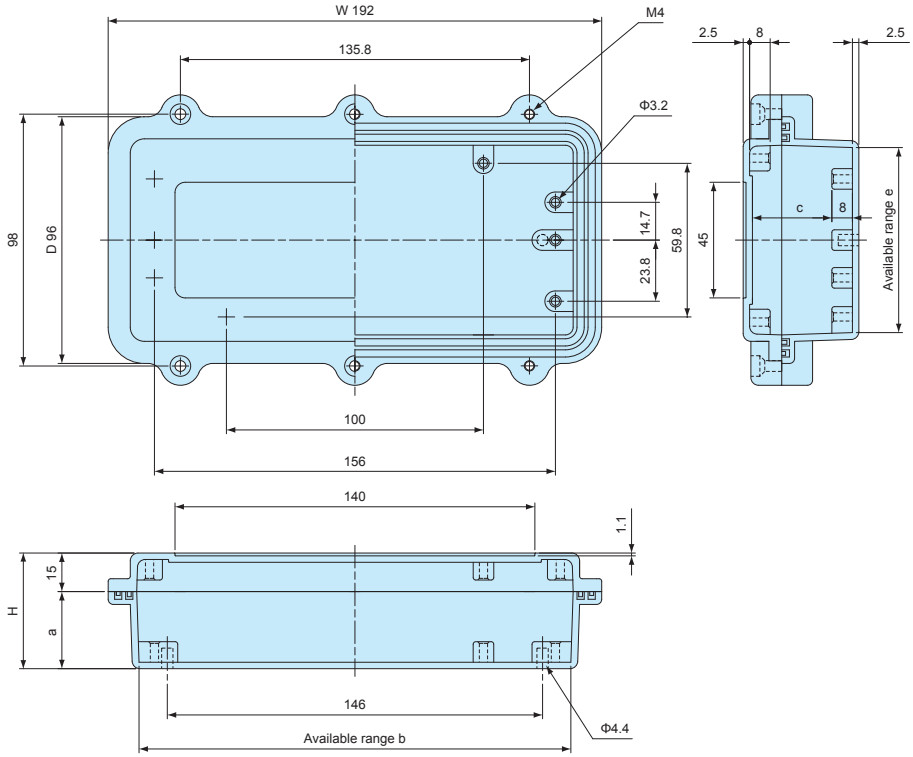


| Product no. | W | D | H | a | b | c | e |
|---|---|---|---|---|---|---|---|
| HQ19-10- 5 | 192 | 96 | 45 | 30 | 168 | 30.9 | 72 |
| HQ19-10- 7 | 192 | 96 | 67 | 52 | 166.6 | 52.9 | 70.6 |

HQ20-15-5
HQ20-15-8

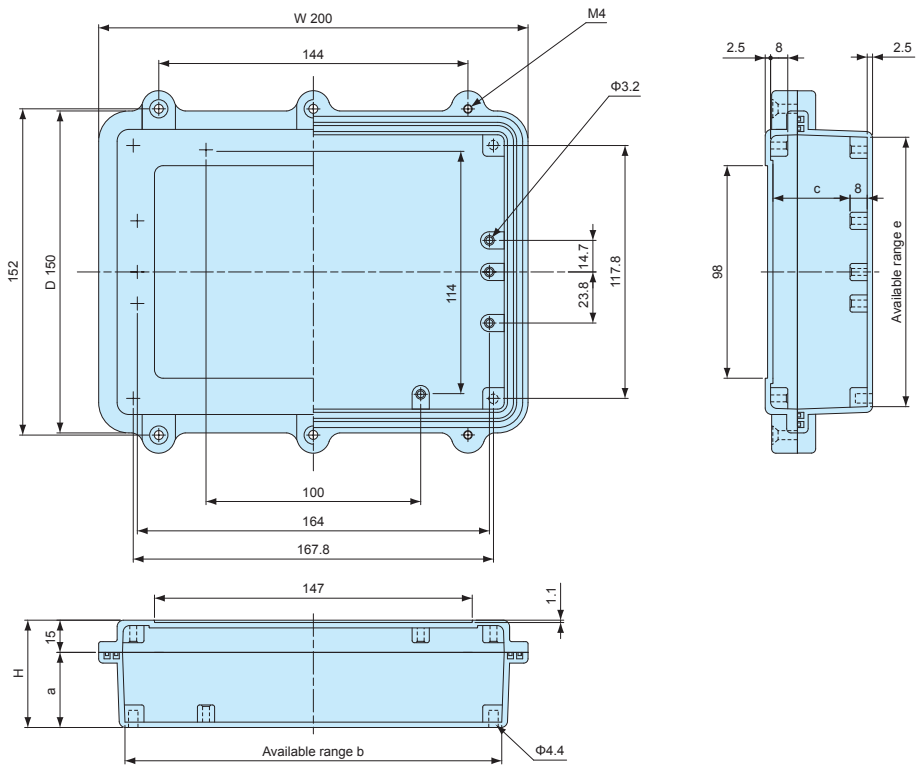


| Product no. | W | D | H | a | b | c | e |
|---|---|---|---|---|---|---|---|
| HQ20-15- 5 | 200 | 150 | 50 | 35 | 175.5 | 35.9 | 125.5 |
| HQ20-15- 8 | 200 | 150 | 75 | 60 | 173.7 | 60.9 | 123.7 |

## HQ dimensions

■ DXF/DWG/PDF drawings available on our website.

HQ26-18-6

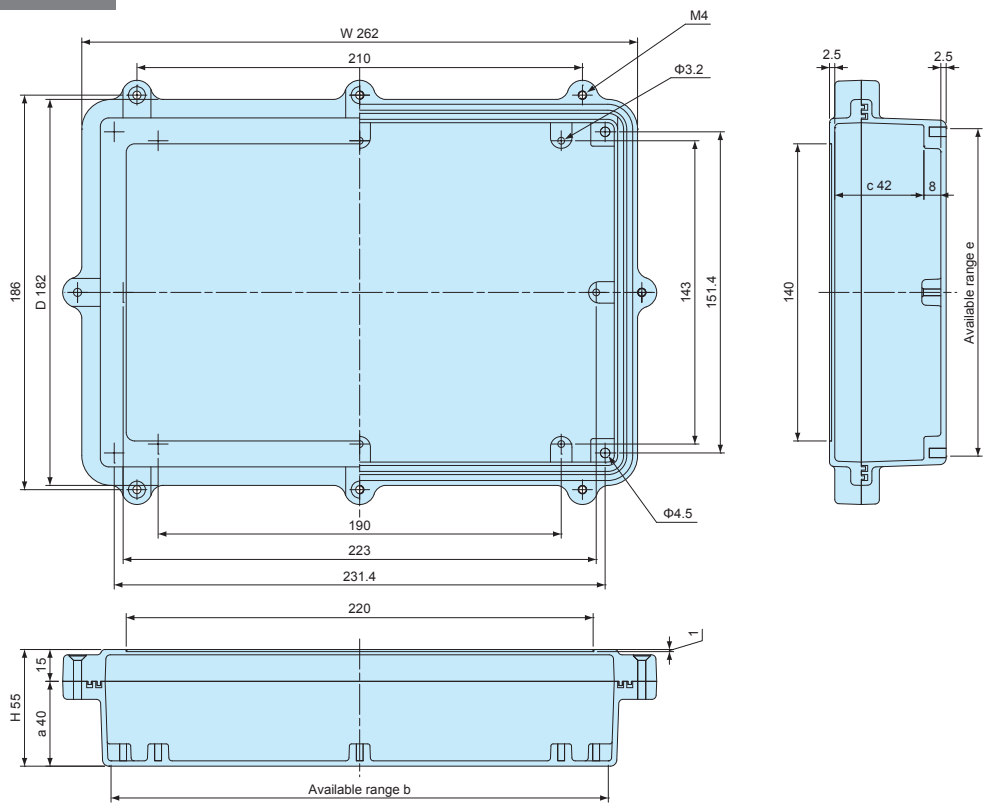


| Product no. | W | D | H | a | b | c | e |
|---|---|---|---|---|---|---|---|
| HQ26-18- 6 | 262 | 181.5 | 55 | 40 | 234.4 | 42 | 154.4 |

HQ27-17- 7
HQ27-17-10

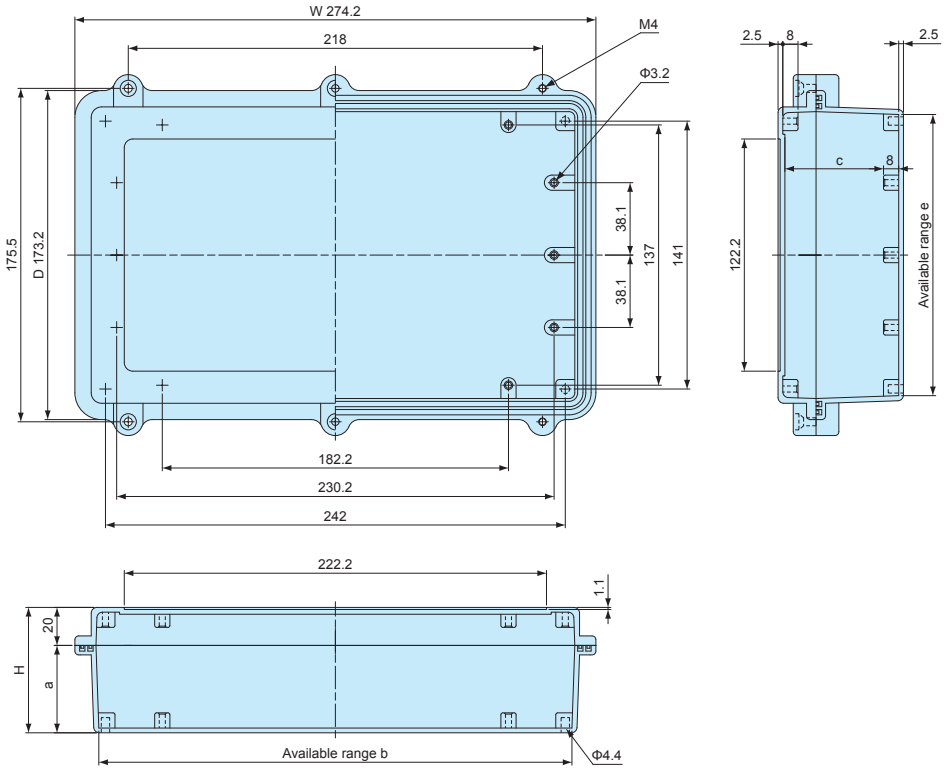


| Product no. | W | D | H | a | b | c | e |
|---|---|---|---|---|---|---|---|
| HQ27-17- 7 | 274.2 | 173.2 | 66 | 46 | 249 | 51.9 | 148 |
| HQ27-17-10 | 274.2 | 172.7 | 100 | 80 | 249 | 85.9 | 148 |

# EMI SHIELDING TEST DATA

**Test Result by Gestek**

**Date : 2007/12/20**

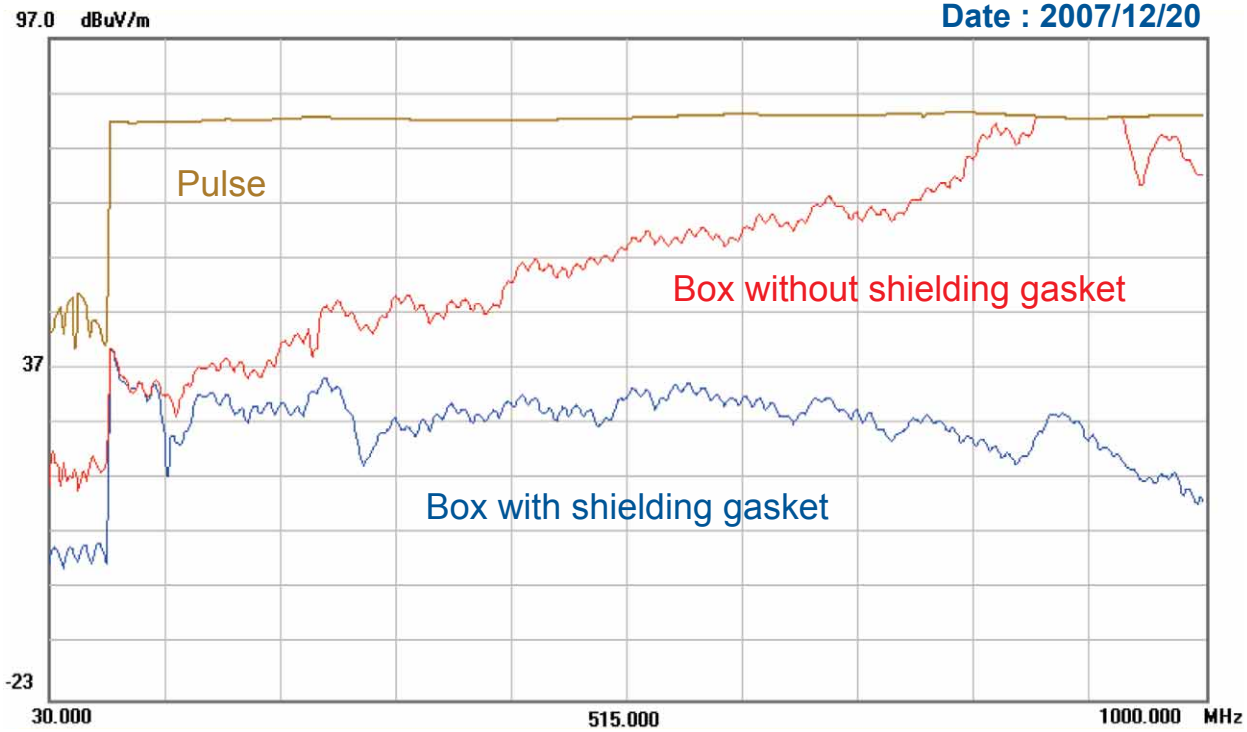


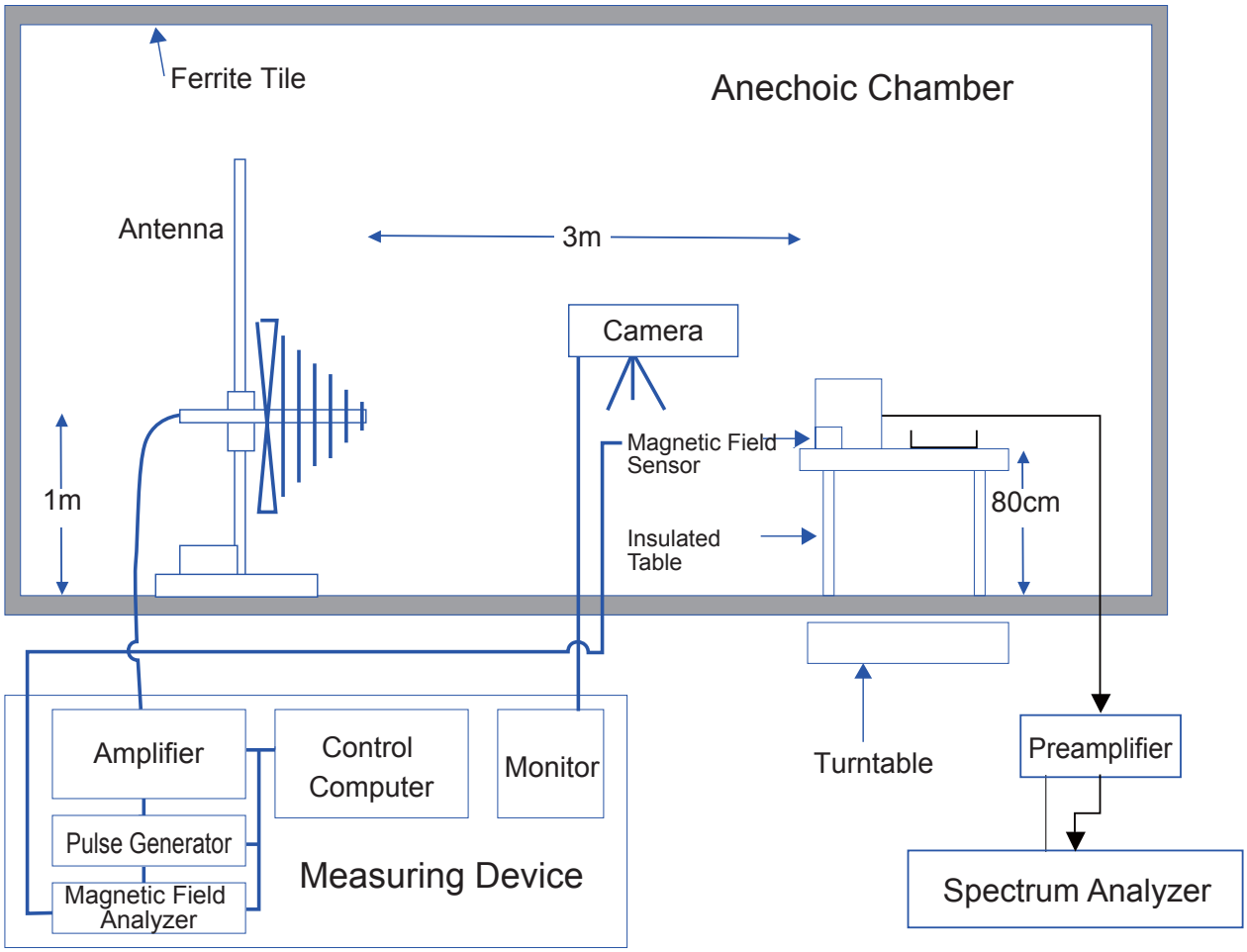

## HQF SERIES MOUNTING BRACKET for HQ

■ DXF/DWG/PDF drawings available on our website.

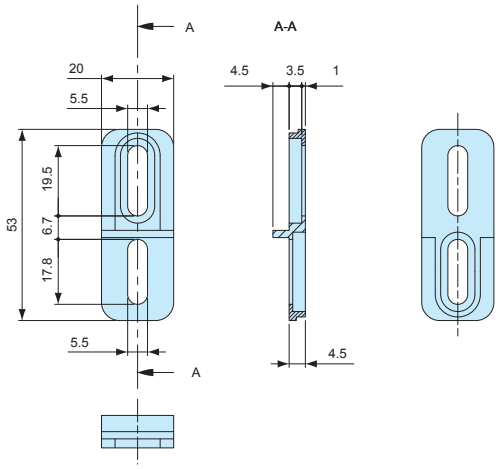


### Components

| Part name | Pcs | Material | Color / Finish |
|---|---|---|---|
| Mounting bracket | 4 | Diecast aluminium ADC12 | Powder coated • Unfinished |
| Screw | 4 | Stainless steel | Unfinished |

### Product no. / Feature

| Product no. | Color / Finish | Suitable box | Pack of |
|---|---|---|---|
| HQF-1G | Light gray / Powder coated | HQ all models | 4 |
| HQF-1N | Unfinished | HQ all models | 4 |

## MT SERIES MOUNTING SCREW for HQ

### Product no. / Feature

| Product no. | Material | Color / Finish | Pack of |
|---|---|---|---|
| MT3.5-8K | Steel | Trivalent chromate | 4 |

## HQG SERIES WATERPROOF GASKET for HQ

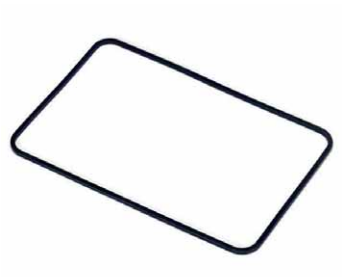

### Product no. / Suitable box

| Product no. | Suitable box |
|---|---|
| HQG1010 | HQ10-10-□ |
| HQG1510 | HQ15-10-□ |
| HQG1616 | HQ16-16-□ |
| HQG1910 | HQ19-10-□ |
| HQG2015 | HQ20-15-□ |
| HQG2618 | HQ26-18-□ |
| HQG2717 | HQ27-17-□ |

■ Material : Silicone

## HQE SERIES SHIELDING GASKET for HQ

EMC Shielding Effects

### Product no. / Suitable box

| Product no. | Suitable box |
|---|---|
| HQE1010 | HQ10-10-□ |
| HQE1510 | HQ15-10-□ |
| HQE1616 | HQ16-16-□ |
| HQE1910 | HQ19-10-□ |
| HQE2015 | HQ20-15-□ |
| HQE2618 | HQ26-18-□ |
| HQE2717 | HQ27-17-□ |

■ Material : Stainless steel • Silicone (White)

# HQP SERIES MOUNTING PLATE for HQ

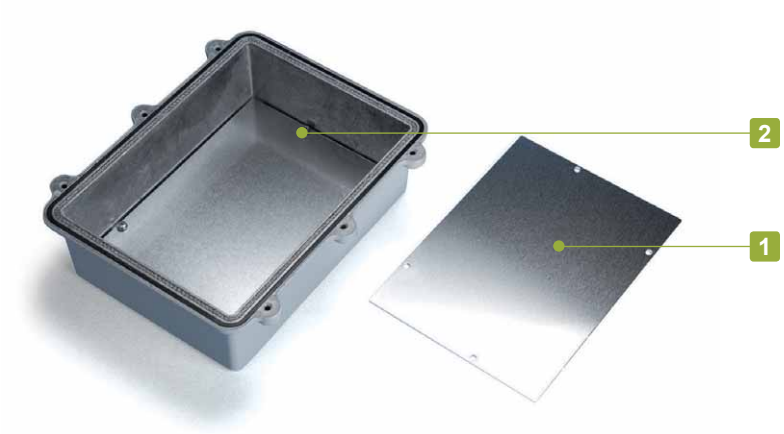


## Components

| No. | Part name | Pcs | Material | Color / Finish |
|---|---|---|---|---|
| 1 | Mounting plate | 1 | Aluminium A1050P t = 1.5 | Unfinished |
| 2 | Screw (MT3.5-8K) | 4 | Steel | Trivalent chromate |

■ Drawings below are reference examples only.
DXF/DWG/PDF drawings available on our website.

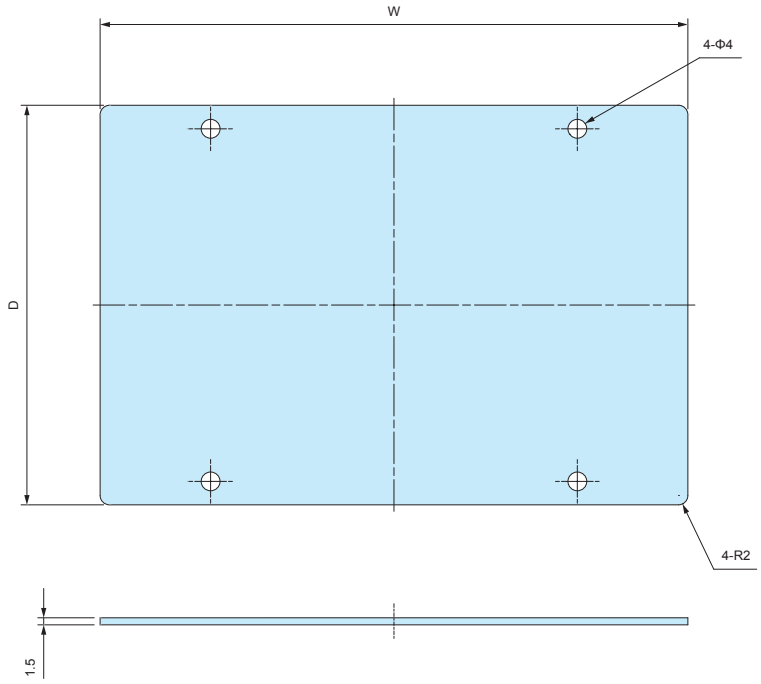


## Product no. / Dimensions

| Product no. | W | D | Suitable box |
|---|---|---|---|
| HQP10-10 | 63 | 68 | HQ10-10-5 • HQ10-10-7 |
| HQP15-10 | 122 | 72 | HQ15-10-5 • HQ15-10-8 |
| HQP16-16 | 132 | 132 | HQ16-16-6 • HQ16-16-8 |
| HQP19-10 | 166 | 70 | HQ19-10-5 • HQ19-10-7 |
| HQP20-15 | 172 | 122 | HQ20-15-5 • HQ20-15-8 |
| HQP26-18 | 235 | 155 | HQ26-18-6 |
| HQP27-17 | 248 | 147 | HQ27-17-7 • HQ27-17-10 |

# SSK SERIES POLE MOUNTING BRACKET

- Stainless steel pole mounting bracket.
- Welding onto stainless steel case can be performed to maintain waterproof ability.
- Use SSK-B series screws (see page SSK-M-2) for installation on diecast aluminium box.
- Use PKB mounting belt (see page PKB-1) for installation onto a pole.

## SSK dimensions

■ DXF/DWG/PDF drawings available on our website.

SSK-S1

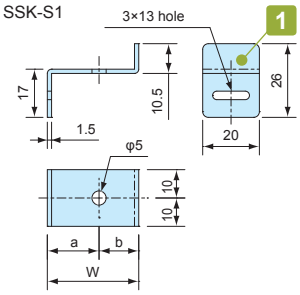


SSK-P50 • 60 • 75 • 80

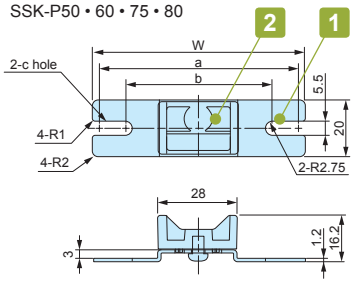


SSK-P100 • 120

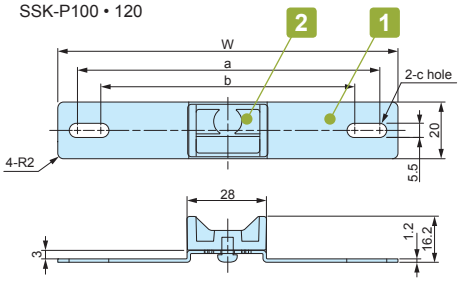


SSK-160 ~ 250

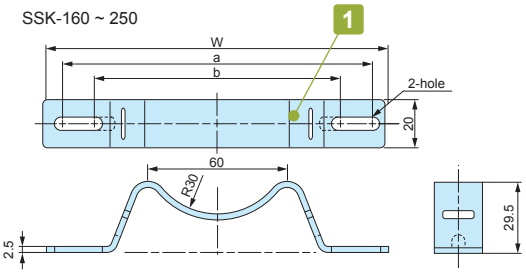


SSK-280 ~ 350

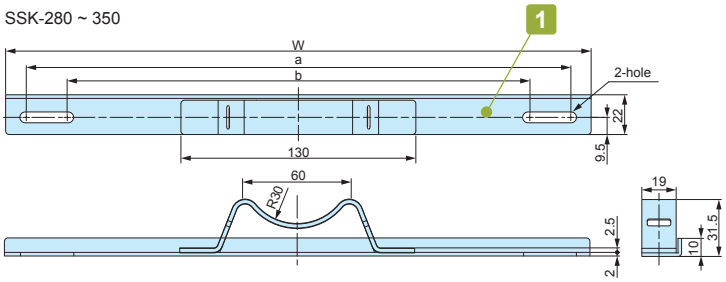


SSK-400

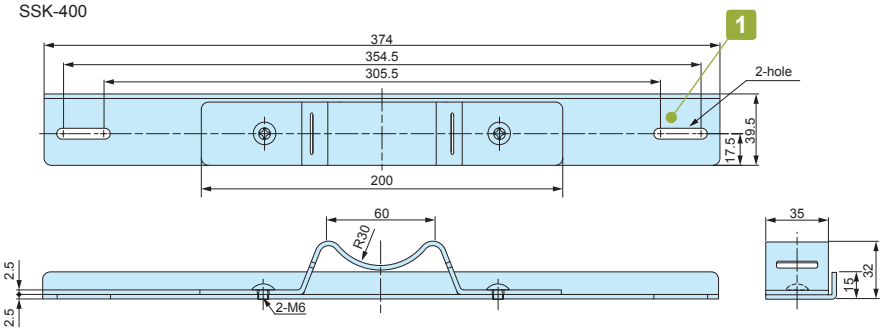


SSK-530

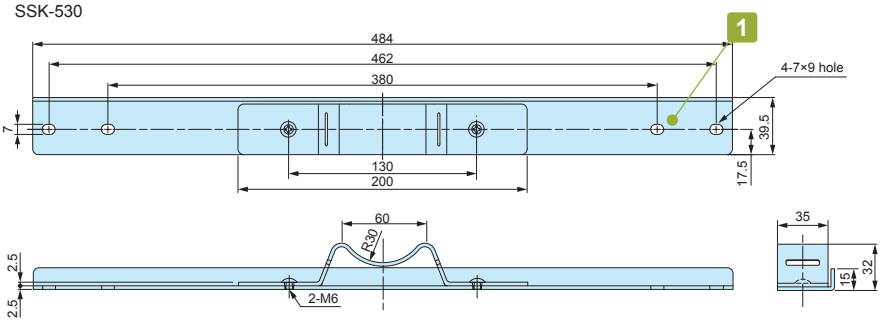

### Components

| No. | Part name | Pcs | Material | Color / Finish |
|---|---|---|---|---|
| 1 | Bracket | 2 | Stainless steel SUS304 | Barrel finish |
| 2 | Mounting bracket (SSK-P models only) | 2 | ASA UL94HB | White gray |

### Product no. / Dimensions

| Product no. | W | a | b | c | Suitable mounting belt | Pack of |
|---|---|---|---|---|---|---|
| SSK-S1 | 32.25 | 18.25 | 14 | — | PKB-10PM, 10P, PKB-10S | 4 |
| SSK-P50 | 50 | 44.5 | 37.5 | 5.5× 9 | PKB-10PM, 10P, PKB-10S | 2 |
| SSK-P60 | 60 | 54.5 | 47.5 | 5.5× 9 | PKB-10PM, 10P, PKB-10S | 2 |
| SSK-P75 | 75 | 69.5 | 55.5 | 5.5×12.5 | PKB-10PM, 10P, PKB-10S | 2 |
| SSK-P80 | 80 | 74.5 | 64.5 | 5.5×10.5 | PKB-10PM, 10P, PKB-10S | 2 |
| SSK-P100 | 100 | 88.1 | 76.5 | 5.5×11.3 | PKB-10PM, 10P, PKB-10S | 2 |
| SSK-P120 | 120 | 106.5 | 88.5 | 5.5×14.5 | PKB-10PM, 10P, PKB-10S | 2 |
| SSK-160 | 142 | 129.5 | 106.5 | – | PKB-10PM, 10P, PKB-10S | 2 |
| SSK-170 | 152 | 142.3 | 101 | – | PKB-10PM, 10P, PKB-10S | 2 |
| SSK-200 | 174 | 161.5 | 112.5 | – | PKB-10PM, 10P, PKB-10S | 2 |
| SSK-210 | 192 | 180.5 | 131.5 | – | PKB-10PM, 10P, PKB-10S | 2 |
| SSK-250 | 230 | 215.5 | 166.5 | – | PKB-10PM, 10P, PKB-10S | 2 |
| SSK-280 | 260 | 244.5 | 195.5 | – | PKB-10PM, 10P, PKB-10S | 2 |
| SSK-300 | 280 | 264.5 | 215.5 | – | PKB-10PM, 10P, PKB-10S | 2 |
| SSK-350 | 324 | 302.5 | 253.5 | – | PKB-10PM, 10P, PKB-10S | 2 |
| SSK-400 | 374 | 354.5 | 305.5 | – | PKB-20S | 2 |
| SSK-530 | 484 | 462 | 380 | 7×9 | PKB-20S | 2 |

## SSK-B SERIES MOUNTING SCREW SET for SSK

- Mounting screw set for use with SSK pole mounting bracket.
- See below chart for appropriate screw / box combination.
- Material / Finish : Stainless steel / Unfinished.

### Product no. / Dimensions

| Product no. | Included screws | Suitable box | Pcs |
|---|---|---|---|
| SSK-B4-15N | M4-15 Pan head with nut | AW5-4-7 ~ AW8-5-18 | 4 |
| SSK-B4-25N | M4-25 Pan head with nut | BDN9-9-6, BDN10-14-7 | 4 |
| SSK-B5-8T | M5-8 Binding head tapping | HQ series | 4 |
| SSK-B5-15N | M5-15 Pan head with nut | AW9-9-10 ~ AW21-9-31 | 4 |
| SSK-B5-25N | M5-25 Pan head with nut | BDN12-22-8, BDN16-26-9 | 4 |

- Installation Example

**M5 thread fastening**

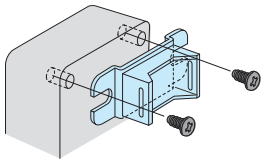

SSK-B5-8T

**M4/M5 Pan head with nut fastening**

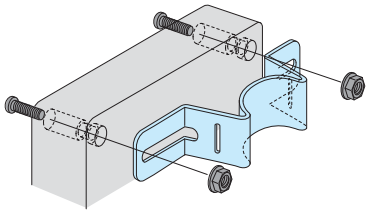

SSK-B4-15N SSK-B4-25N
SSK-B5-15N SSK-B5-25N
SSK-B5-35N SSK-B6-40N

# POLE MOUNTING BRACKET / SCREW SET MATCHING CHART

## BDN series

| Box Product no. | | SSK Product no. | | Screw set Product no. |
|---|---|---|---|---|
| | | Vertical mount | Horizontal mount | |
| BDN | 9-9-6 | SSK-P75 | SSK-P100 | SSK-B4-25-N |
| | 10-14-7 | SSK-P80 | SSK-160 | SSK-B4-25-N |
| | 12-22-8 | SSK-P100 | SSK-250 | SSK-B5-25-N |
| | 16-26-9 | SSK-160 | SSK-280 | SSK-B5-25-N |

## HQ series

| Box Product no. | | SSK Product no. | | Screw set Product no. |
|---|---|---|---|---|
| | | Vertical mount | Horizontal mount | |
| HQ | 10-10-5 • 10-10-7 | SSK-P50 | – | SSK-B5-8T |
| | 15-10-5 • 15-10-8 | SSK-P80 | SSK-160 | SSK-B5-8T |
| | 15-11-3 | SSK-P100 | SSK-160 | SSK-B5-8T |
| | 16-16-6 • 16-16-8 | SSK-170 | SSK-170 | SSK-B5-8T |
| | 19-10-5 • 19-10-7 | – | SSK-200 | SSK-B5-8T |
| | 20-15-3 • 20-15-5 • 20-15-9 | SSK-160 | SSK-210 | SSK-B5-8T |
| | 26-18-6 | SSK-200 | SSK-280 | SSK-B5-8T |
| | 27-17-7 • 27-17-10 | SSK-170 | SSK-280 | SSK-B5-8T |

## SSM • SSB series

■ Installation should be done by welding.

| Box Product no. | | | | SSK Product no. | |
|---|---|---|---|---|---|
| | | | | Vertical mount | Horizontal mount |
| SSM SSB | 121508 | | | SSK-S1 | – |
| | 151508 | 152206 | 152210 | SSK-160 | – |
| | 202010 | 202806 | | SSK-210 | – |
| | 202812 | 223312 | | | |
| | 304015 | | | SSK-300 | – |

■ SSK bracket is different depending on mount type (Vertical or Horizontal).

**Vertical mount**
(Longer vertical side)

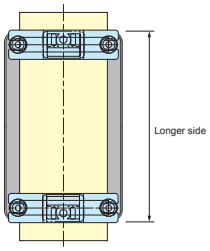


**Horizontal mount**
(Longer horizontal side)

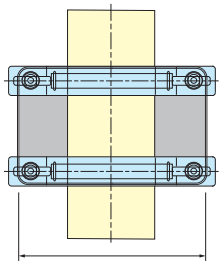


## AW series

| Box Product no. | | SSK Product no. | | Screw set Product no. |
|---|---|---|---|---|
| | | Vertical mount | Horizontal mount | |
| AW | 5-4-7 | – | SSK-P100 | SSK-B4-15N |
| | 5-4-9 | – | SSK-P120 | SSK-B4-15N |
| | 5-4-11 | – | SSK-160 | SSK-B4-15N |
| | 5-4-14 | – | SSK-200 | SSK-B4-15N |
| | 7-7-8 | SSK-P50 | SSK-P120 | SSK-B4-15N |
| | 7-7-11 | SSK-P50 | SSK-160 | SSK-B4-15N |
| | 7-7-15 | SSK-P50 | SSK-210 | SSK-B4-15N |
| | 7-7-20 | SSK-P50 | SSK-250 | SSK-B4-15N |
| | 7-7-25 | SSK-P50 | SSK-300 | SSK-B4-15N |
| | 8-5-9 | SSK-P75 | SSK-160 | SSK-B4-15N |
| | 8-5-12 | SSK-P75 | SSK-160 | SSK-B4-15N |
| | 8-5-14 | SSK-P75 | SSK-200 | SSK-B4-15N |
| | 8-5-18 | SSK-P75 | SSK-250 | SSK-B4-15N |
| | 9-9-10 | SSK-P75 | SSK-160 | SSK-B5-15N |
| | 9-9-13 | SSK-P75 | SSK-170 | SSK-B5-15N |
| | 9-9-17 | SSK-P75 | SSK-250 | SSK-B5-15N |
| | 9-9-22 | SSK-P75 | SSK-280 | SSK-B5-15N |
| | 9-9-28 | SSK-P75 | SSK-350 | SSK-B5-15N |
| | 11-6-11 | SSK-P100 | SSK-160 | SSK-B5-15N |
| | 11-6-15 | SSK-P100 | SSK-210 | SSK-B5-15N |
| | 11-6-19 | SSK-P100 | SSK-250 | SSK-B5-15N |
| | 11-6-24 | SSK-P100 | SSK-300 | SSK-B5-15N |
| | 12-8-11 | SSK-P120 | SSK-160 | SSK-B5-15N |
| | 12-8-14 | SSK-P120 | SSK-200 | SSK-B5-15N |
| | 12-8-17 | SSK-P120 | SSK-250 | SSK-B5-15N |
| | 12-8-22 | SSK-P120 | SSK-280 | SSK-B5-15N |
| | 16-9-14 | SSK-160 | SSK-200 | SSK-B5-15N |
| | 16-9-18 | SSK-160 | SSK-250 | SSK-B5-15N |
| | 16-9-23 | SSK-160 | SSK-280 | SSK-B5-15N |
| | 16-9-28 | SSK-160 | SSK-350 | SSK-B5-15N |
| | 21-9-17 | SSK-210 | SSK-250 | SSK-B5-15N |
| | 21-9-21 | SSK-210 | SSK-280 | SSK-B5-15N |
| | 21-9-26 | SSK-210 | SSK-350 | SSK-B5-15N |
| | 21-9-31 | SSK-210 | SSK-400 | SSK-B5-15N |

# SNB series STAINLESS STEEL POLE MOUNTING STRAP NEW

## SNB dimensions

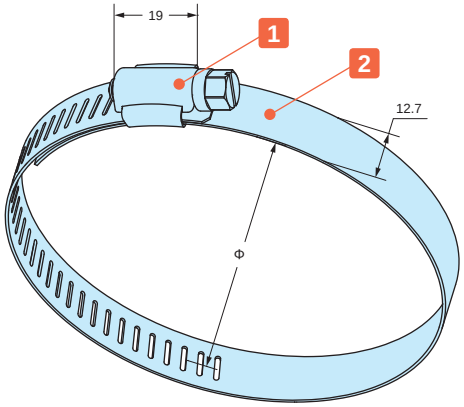


- Corrosion resistant stainless steel (SUS304) belt clamp.
- It can be installed securely by tightening the screw.
- 8 mm nut driver (box driver) is recommended for tightening. Minus screw driver can also be used.

### Components

| No. | Part name | Pcs | Material | Finish |
|---|---|---|---|---|
| 1 | Bracket | 1 | Stainless steel SUS304 | Polished |
| 2 | Strap | 1 | Stainless steel SUS304 | Polished |

### Product no. / Dimensions

| Product no. | Applicable diameter (Φ) | Strap width | Strap thickness | Recommended torque N • m | Weight (g) | Pack of |
|---|---|---|---|---|---|---|
| SNB 52- 76 | 52 ~ 76 | 12.7 | 0.6 | 0.7 ~ 1.0 | 27.5 | 1 |
| SNB 72- 95 | 72 ~ 95 | 12.7 | 0.6 | 0.7 ~ 1.0 | 30 | 1 |
| SNB 91-114 | 91 ~ 114 | 12.7 | 0.6 | 0.7 ~ 1.0 | 34.5 | 1 |
| SNB105-127 | 105 ~ 127 | 12.7 | 0.6 | 0.7 ~ 1.0 | 37.5 | 1 |
| SNB117-140 | 117 ~ 140 | 12.7 | 0.6 | 0.7 ~ 1.0 | 39.5 | 1 |
| SNB130-153 | 130 ~ 153 | 12.7 | 0.6 | 0.7 ~ 1.0 | 41.5 | 1 |
| SNB142-165 | 142 ~ 165 | 12.7 | 0.6 | 0.7 ~ 1.0 | 43.5 | 1 |
| SNB155-178 | 155 ~ 178 | 12.7 | 0.6 | 0.7 ~ 1.0 | 46.5 | 1 |
| SNB168-191 | 168 ~ 191 | 12.7 | 0.6 | 0.7 ~ 1.0 | 49 | 1 |
| SNB181-204 | 181 ~ 204 | 12.7 | 0.6 | 0.7 ~ 1.0 | 51 | 1 |
| SNB194-217 | 194 ~ 217 | 12.7 | 0.6 | 0.7 ~ 1.0 | 52.5 | 1 |
| SNB207-230 | 207 ~ 230 | 12.7 | 0.6 | 0.7 ~ 1.0 | 57 | 1 |
| SNB220-243 | 220 ~ 243 | 12.7 | 0.6 | 0.7 ~ 1.0 | 59.5 | 1 |
| SNB233-256 | 233 ~ 256 | 12.7 | 0.6 | 0.7 ~ 1.0 | 62.5 | 1 |
| SNB246-269 | 246 ~ 269 | 12.7 | 0.6 | 0.7 ~ 1.0 | 64 | 1 |
| SNB259-282 | 259 ~ 282 | 12.7 | 0.6 | 0.7 ~ 1.0 | 67.5 | 1 |
| SNB272-295 | 272 ~ 295 | 12.7 | 0.6 | 0.7 ~ 1.0 | 70 | 1 |
| SNB285-308 | 285 ~ 308 | 12.7 | 0.6 | 0.7 ~ 1.0 | 71 | 1 |

- Recommended torque listed is for reference only; actual may differ. Assemble after testing torque.

### SNB Strap required

| Suitable series | Suitable models | | | | | | Required |
|---|---|---|---|---|---|---|---|
| SSK series | SSK-S1 | SSK-160 | SSK-170 | SSK-200 | SSK-210 | SSK-250 | 2 |
| | SSK-280 | SSK-300 | SSK-350 | SSK-400 | SSK-530 | | |
| WGMB series | WGMB-1W | | | | | | 1 |

# PKB series POLE MOUNTING BELT

PKB−10PM, 10P

PKB−10S, 20S

- Pole mounting belt for attachment of enclosures with suitable pole mount brackets or construction onto poles.
- Designed for one time use only (not reusable).
- Strong stainless steel clamping type and easy installation plastic type are available.

## PKB dimensions

- DXF/DWG/PDF drawings available on our website.

PKB-10PM, 10P

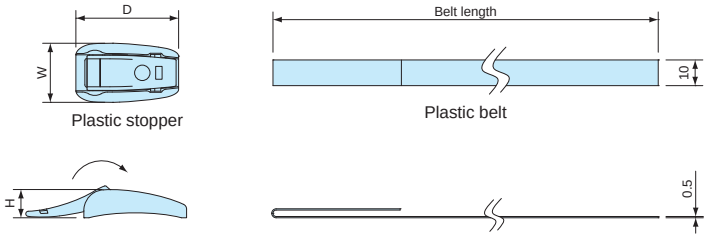


PKB-10S

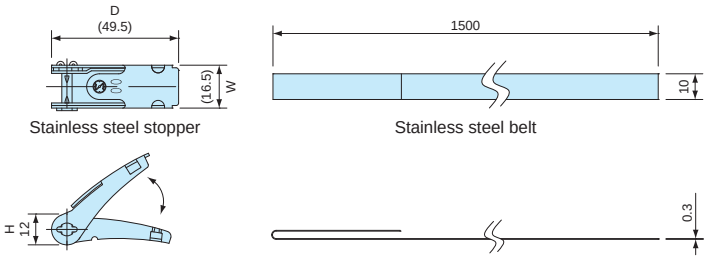


PKB-20S

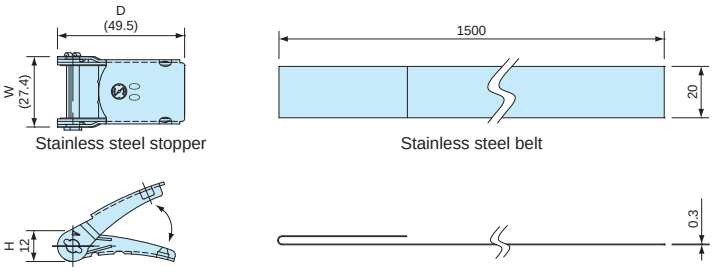


### Components

| No. | Part name | Material | Color / Finish |
|---|---|---|---|
| 1 | Stopper | Stainless steel SUS304 • POM | Barrel finish • Black |
| 2 | Belt | Stainless steel SUS430 • PET | Bright annealed finish • Gray |

### Product no. / Dimensions

| Product no. | W | D | H | Belt length | Belt material | Tensile strength (horizontal) | Weight (g) | Pack of |
|---|---|---|---|---|---|---|---|---|
| PKB-10PM | 24 | 23 | 11 | 500 mm | PET | 0.8kN | 14 | 2 |
| PKB-10PM | 23 | 40 | 11 | 1,500 mm | PET | 1.3kN | 31.8 | 2 |
| PKB-10S | 16.5 | 49.5 | 12 | 1,500 mm | Stainless steel SUS304 | 1.4kN | 101.6 | 2 |
| PKB-20S | 27.4 | 49.5 | 12 | 1,500 mm | Stainless steel SUS430 | 2.9kN | 182.2 | 2 |

# TMA SERIES DIECAST ALUMINIUM TERMINAL JUNCTION BOX

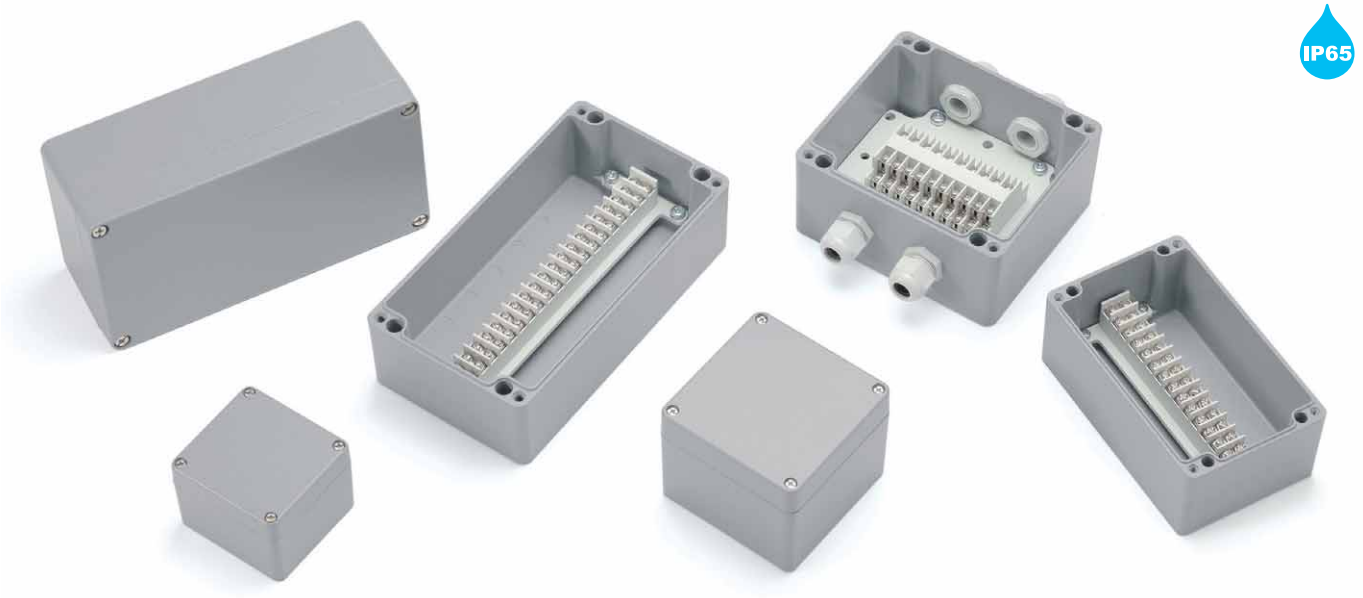

IP65

- IP65 protection class and impact resistant diecast aluminium terminal junction box.
- Diecast aluminum box has superior heat dissipation, heat resistance, and oil resistance compared to plastic box.
- Available in 6 different sizes with 6 to 30 poles configurations.

**Technical Data**

Protection class: IP65
Operating temperature: -40°C ~ +80°C
Recommended torque: 1N • m

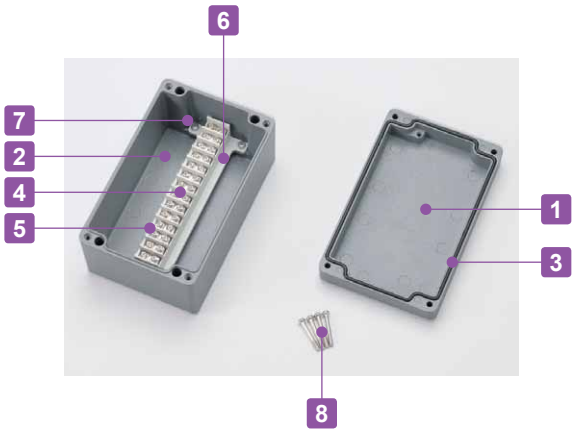


### Terminal Block Specification

| | |
|---|---|
| Rated voltage | 400V |
| Rated current | 17.5A |
| Applicable wire | 1.5mm² |
| Standard tightening torque | 0.8N • m |

**Applicable crimp terminal R1.25-3.5**

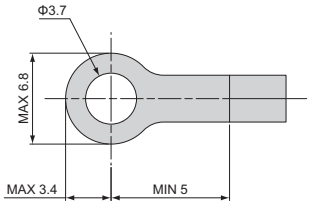


### Components

| No. | Part name | Pcs | Material | Color / Finish |
|---|---|---|---|---|
| 1 | Top cover | 1 | Diecast aluminium | Light gray / Painted |
| 2 | Body | 1 | Diecast aluminium | Light gray / Painted |
| 3 | Gasket | 1 | Polyurethane | Black |
| 4 | Conductive plate | 6 ~ 30 | Brass | Nickel plated |
| 5 | Terminal screw (M3.5 Pan head) | 12 ~ 60 | Steel | Nickel plated |
| 6 | Terminal base | 1 | PBT (UL94V-0) | Light gray |
| 7 | Terminal mount screw (M4 • M6 Pan head) | 2 ~ 4 | Steel | Trivalent chromate |
| 8 | Cover screw | 4 | Stainless steel | Unfinished |

## Accessories (Optional parts)

Shorting bar SBR series
See page SBR-1

Cable gland
See cable gland pages

**Product no. / Dimensions**

| Product no. | L | W | H | Number of poles | Weight (g) |
|---|---|---|---|---|---|
| TMA- 6P | 80 | 75 | 57.5 | 6P | 341 |
| TMA- 9P | 100 | 100 | 80 | 9P | 642 |
| TMA-15P | 100 | 160 | 80 | 15P | 867 |
| TMA-20P-AS | 132 | 150 | 90 | 10P × 2 | 1,394 |
| TMA-20P | 120 | 220 | 80 | 20P | 1,426 |
| TMA-30P-AS | 120 | 220 | 80 | 15P × 2 | 1,529 |

## TMA dimensions

■ Drawings below are reference examples only.
DXF/DWG/PDF drawings available on our website.

TMA-6P

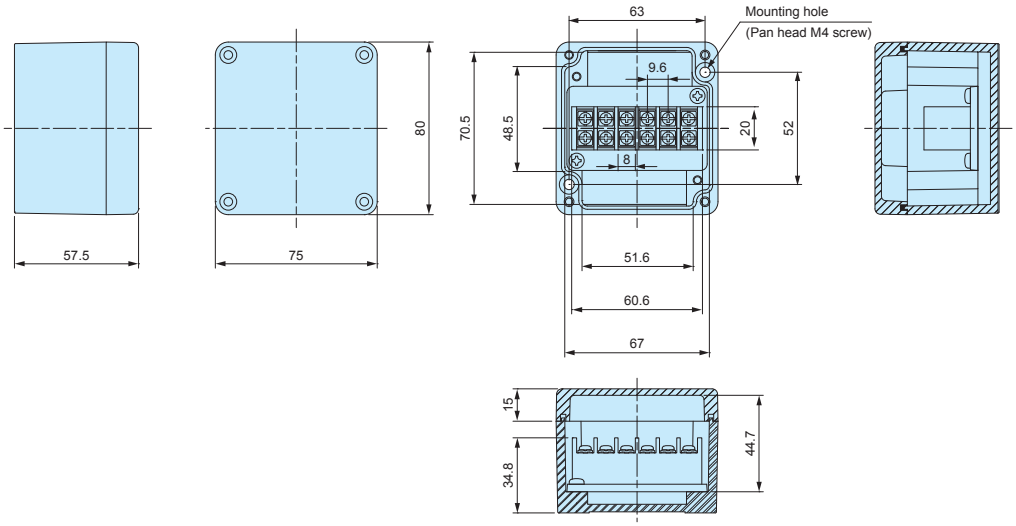


TMA-9P

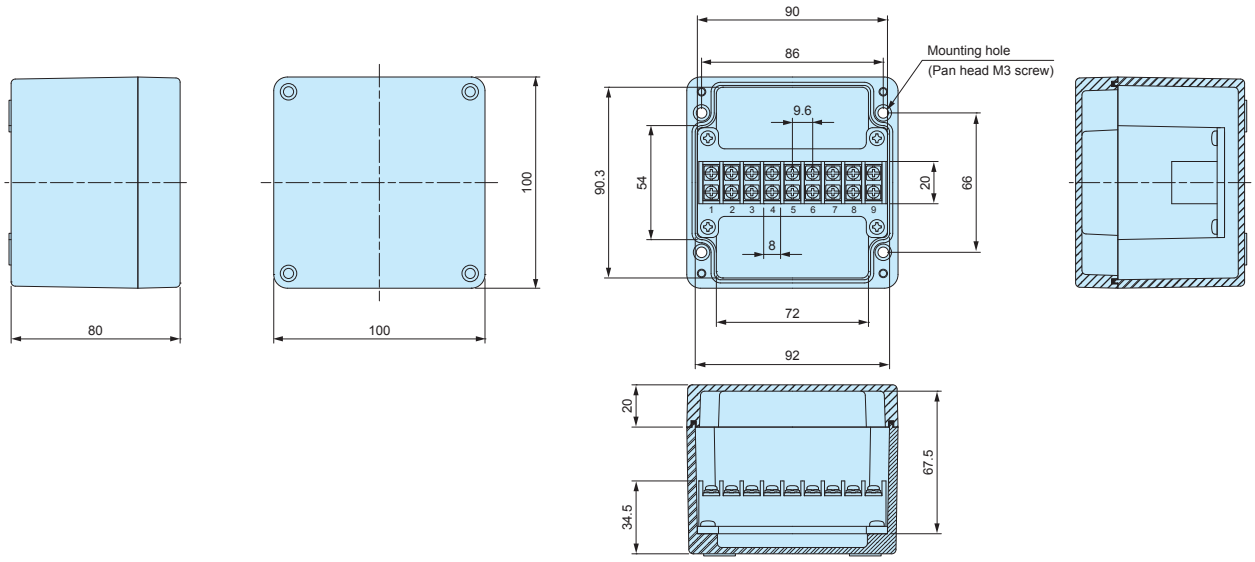


TMA-15P

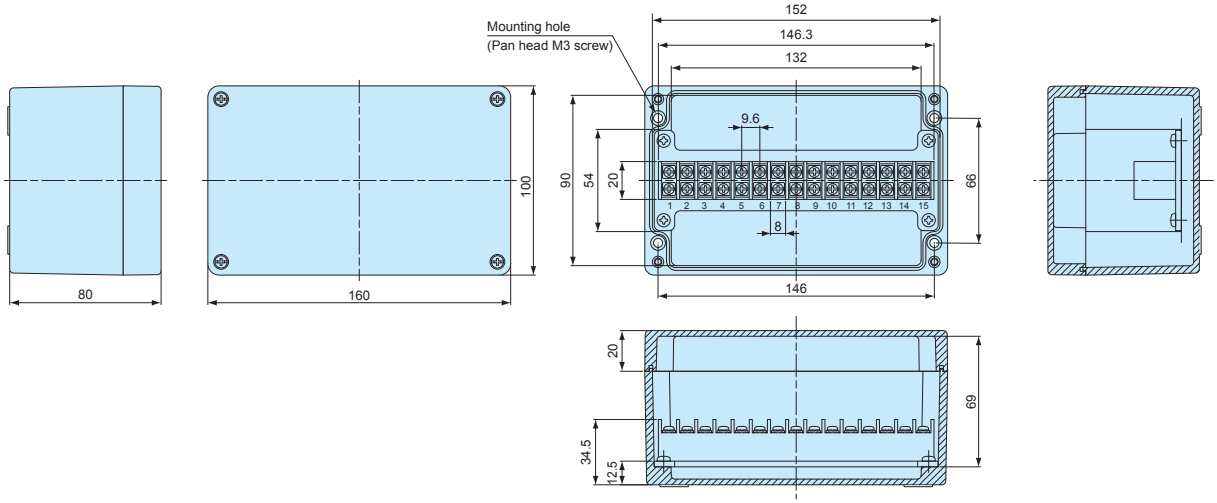

TMA-20P-AS

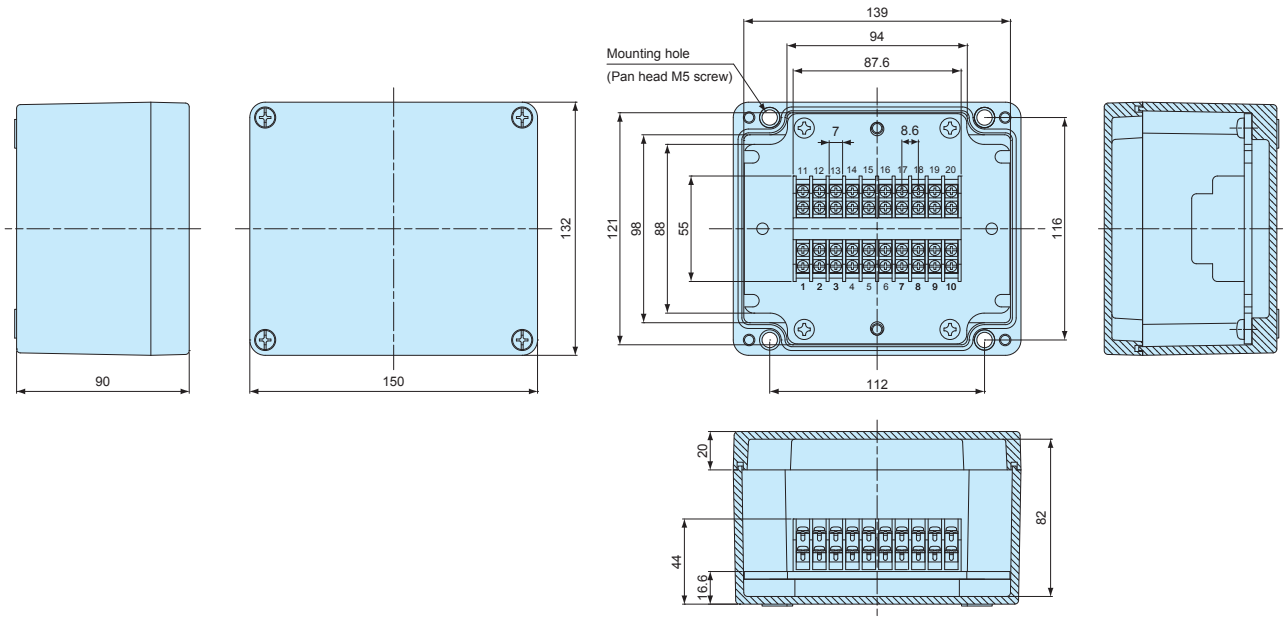


TMA-20P

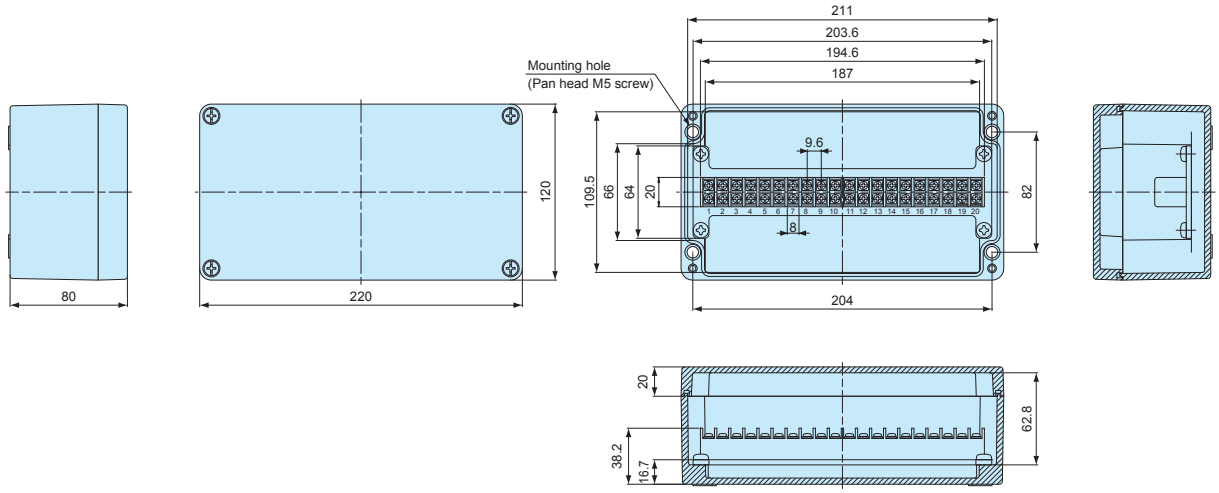


TMA-30P-AS

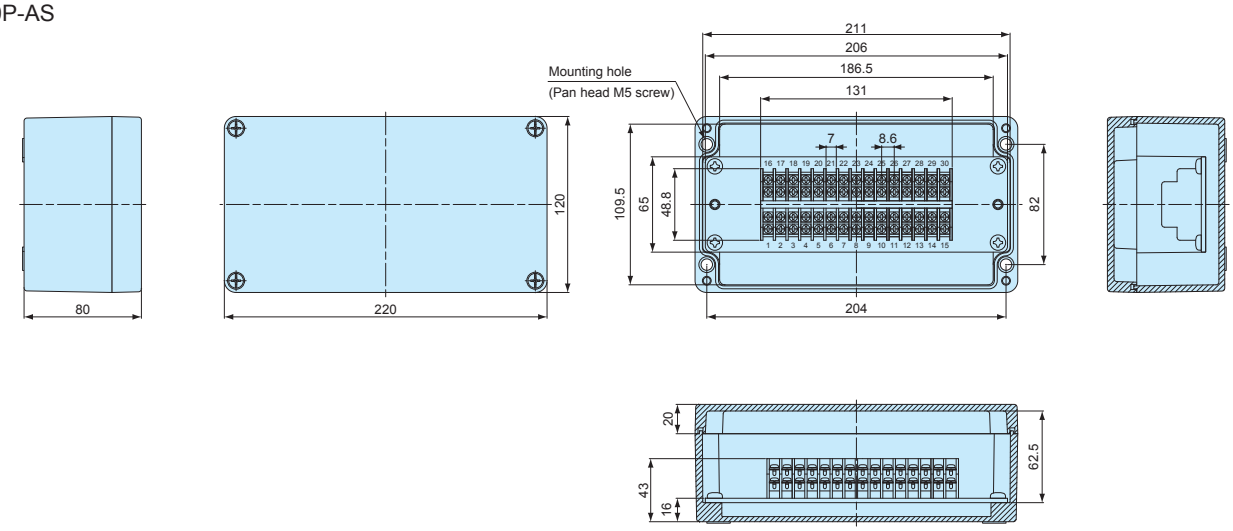

# SBR SERIES SHORTING BAR

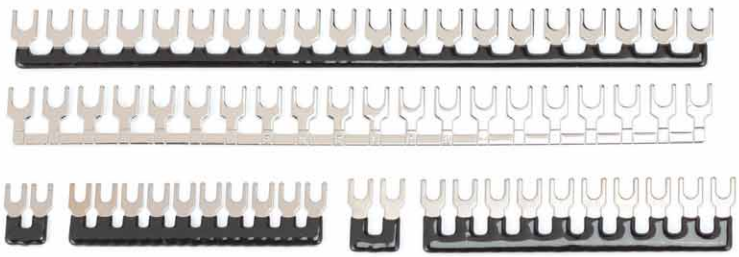

- Shorting bar for common-wiring.
- SBR70-10P, SBR85-10P, SBR95-20P, and SBR95-20N can be cut accordingly into required poles.
- PVC coated. SBR95-20 available in both PVC coated (SBR95-20P) and non PVC coated (SBR95-20N) models.
- See chart below for suitable box.

SBR70-2P

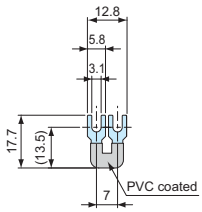


SBR70-10P

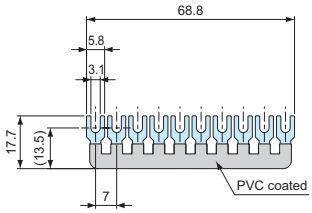


SBR85-2P

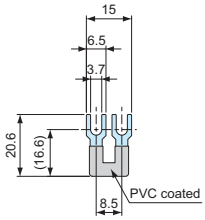


SBR85-10P

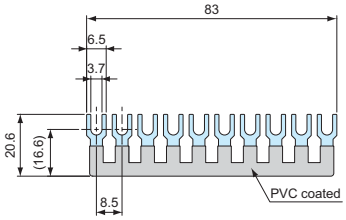


SBR95-20P

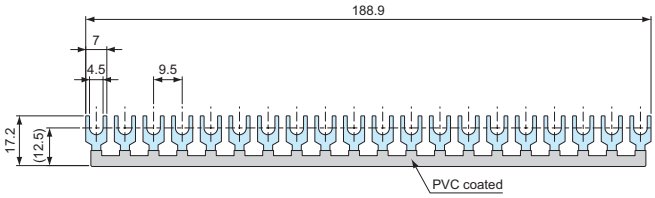


SBR95-20N

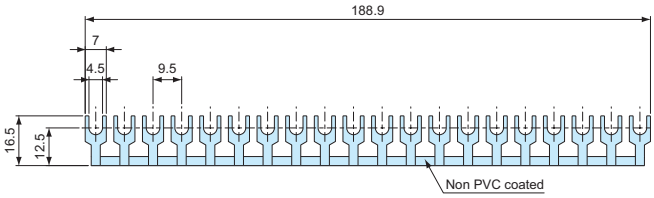


### Suitable Box Chart

| Product no. | Number of poles | Pole distance | Suitable box |
|---|---|---|---|
| SBR70 - 2P | 2P | 7.0mm | TMC series |
| SBR70 -10P | 10P | 7.0mm | TMC series |
| SBR85 - 2P | 2P | 8.6mm | TMB-20P, TMA-20P-AS, TMA30P-AS |
| SBR85 -10P | 10P | 8.6mm | TMB-20P, TMA-20P-AS, TMA30P-AS |
| SBR95 -20P | 20P | 9.6mm | TMA • TMB series (Not applicable for TMB-20P, TMA20P-AS, and TMA30P-AS models) |
| SBR95 -20N | 20P | 9.6mm | TMA • TMB series (Not applicable for TMB-20P, TMA20P-AS, and TMA30P-AS models) |

### Product no. / Feature

■ Pack quantity differs by models.

| Product no. | Number of poles | Material | Finish | PVC coating | Pack of |
|---|---|---|---|---|---|
| SBR70 - 2P | 2P | Brass | Nickel plated | Yes | 10 |
| SBR70 -10P | 10P | Brass | Nickel plated | Yes | 1 |
| SBR85 - 2P | 2P | Brass | Nickel plated | Yes | 10 |
| SBR85 -10P | 10P | Brass | Nickel plated | Yes | 1 |
| SBR95 -20P | 20P | Brass | Nickel plated | Yes | 1 |
| SBR95 -20N | 20P | Brass | Nickel plated | No | 1 |

## RB-9 RUBBER BUSH

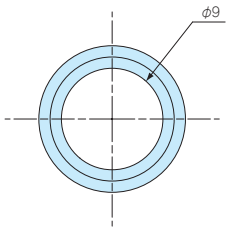


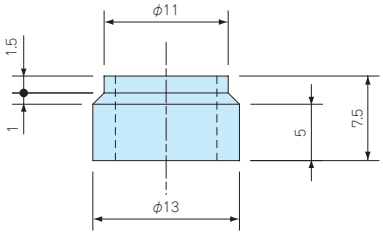


- Rubber bush for TMC series terminal junction box.
- Applicable for Φ8 ~ Φ9mm diameter cable.

**Product no. / Feature**

| Product no. | Material | Color | Cable range | Pack of |
|---|---|---|---|---|
| RB-9 | NBR | Black | Φ8 ~ Φ9mm | 2 |

## SZ SERIES WATERPROOF WASHER

- Waterproof washer for screwing onto waterproof boxes.
- NBR sealing material has superior oil resistance (N models only) .
- Silicone sealing material has wider operating temperature with superior temperature and water resistance (S models only).

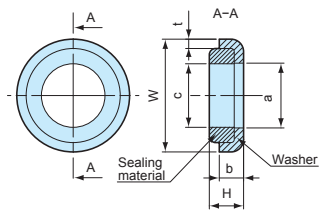


- Shape of the sealing material vary by product.

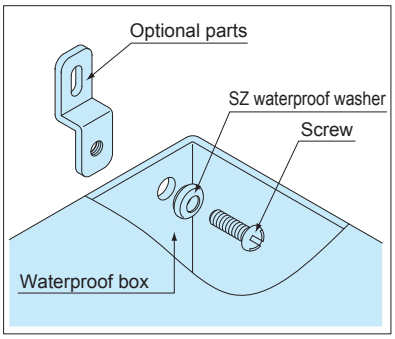


**Technical Data**

Water pressure resistance:
M3 ~ M10 : 200kg/cm$^2$ 5min
M12 ~ M16 : 100kg/cm$^2$ 5min

**Product no. / Dimensions**

| Product no. | W | H | a | b | c | t | Washer material | Sealing material | Color | Screw size | Pack of |
|---|---|---|---|---|---|---|---|---|---|---|---|
| SZ- 3N | 7 | 2.7 | 3.2 | 2.2 | 3.1 | 0.5 | SUS304 | NBR | Black | M 3 | 1 |
| SZ- 3S | 7 | 2.7 | 3.2 | 2.2 | 3.1 | 0.5 | SUS304 | Silicone | Brown | M 3 | 1 |
| SZ- 4N | 8 | 2.8 | 4.2 | 2.1 | 4.1 | 0.5 | SUS304 | NBR | Black | M 4 | 1 |
| SZ- 4S | 8 | 2.8 | 4.2 | 2.1 | 4.1 | 0.5 | SUS304 | Silicone | Brown | M 4 | 1 |
| SZ- 5N | 9.5 | 3.6 | 5.2 | 2.7 | 5.1 | 0.8 | SUS304 | NBR | Black | M 5 | 1 |
| SZ- 5S | 9.5 | 3.6 | 5.2 | 2.7 | 5.1 | 0.8 | SUS304 | Silicone | Brown | M 5 | 1 |
| SZ- 6N | 11.5 | 4 | 6.2 | 3 | 6.2 | 1 | SUS304 | NBR | Black | M 6 | 1 |
| SZ- 6S | 11.5 | 4 | 6.2 | 3 | 6.2 | 1 | SUS304 | Silicone | Brown | M 6 | 1 |
| SZ- 8N | 15.2 | 3.8 | 8.2 | 3.2 | 8.2 | 1 | SUS304 | NBR | Black | M 8 | 1 |
| SZ- 8S | 15.2 | 3.8 | 8.2 | 3.2 | 8.2 | 1 | SUS304 | Silicone | Brown | M 8 | 1 |
| SZ-10N | 18 | 5.3 | 10.2 | 4 | 10.2 | 1.5 | SUS304 | NBR | Black | M10 | 1 |
| SZ-10S | 18 | 5.3 | 10.2 | 4 | 10.2 | 1.5 | SUS304 | Silicone | Brown | M10 | 1 |
| SZ-12N | 24 | 6.1 | 14.2 | 4.8 | 12.2 | 1.5 | SUS304 | NBR | Black | M12 | 1 |
| SZ-12S | 24 | 6.1 | 14.2 | 4.8 | 12.2 | 1.5 | SUS304 | Silicone | Brown | M12 | 1 |
| SZ-16N | 30 | 6.8 | 18.4 | 5.3 | 16 | 1.9 | SUS304 | NBR | Black | M16 | 1 |
| SZ-16S | 30 | 6.8 | 18.4 | 5.3 | 16 | 1.9 | SUS304 | Silicone | Brown | M16 | 1 |

# RMW series WEATHERPROOF CABLE GLAND

IP67

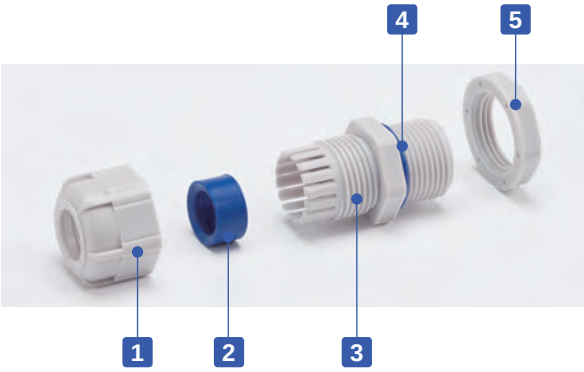


- Weatherproof cable gland equipped with high ultraviolet and degradation resistant silicone sealing insert and O-ring.
- Recommended to use outdoors where waterproofing is critical.
- IP67 protection class.

**Components**

■ PA = Polyamide

| No. | Part name | Material |
|---|---|---|
| 1 | Cap | PA66 UL94V-2 |
| 2 | Sealing insert | Silicone |
| 3 | Connector | PA66 UL94V-2 |
| 4 | O-ring | Silicone |
| 5 | Lock nut | PA66 UL94V-2 |

## RMW dimensions

■ DXF/DWG/PDF drawings available on our website.

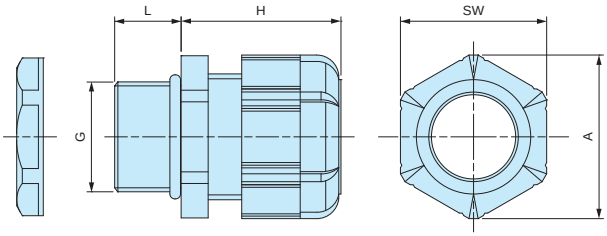


**Technical Data**

Protection class: IP67
Operating temperature: -20°C ~ +80°C

■ Lock nut is not included for RMW10S-6.
Please drill a proper thread hole into the enclosure for installation.

**Product no. / Dimensions**

| Product no. | | G | | Cable range | | L | H Max | SW | A | Pack of |
|---|---|---|---|---|---|---|---|---|---|---|
| ● Black | ● Light gray | Thread size | Mounting hole | Min | Max | | | | | |
| RMW8L-2.5B | RMW8L-2.5S | M8×1.25 | Φ8.2 | 1 | 2.5 | 13 | 19.5 | 11.8 | 13.5 | 1 |
| RMW8L-4B | RMW8L-4S | M8×1.25 | Φ8.2 | 2.5 | 4 | 13 | 19.5 | 11.8 | 13.5 | 1 |
| RMW10S-6B | RMW10S-6S | M10×1.5 | — | 3 | 6 | 8 | 20.5 | 13 | 14.4 | 1 |
| RMW10L-6B | RMW10L-6S | M10×1.5 | Φ10.2 | 3 | 6 | 13 | 20.5 | 13 | 14.4 | 1 |
| RMW12S-7B | RMW12S-7S | M12×1.5 | Φ12.2 | 3.5 | 7 | 9 | 20.5 | 16 | 17.6 | 1 |
| RMW12L-7B | RMW12L-7S | M12×1.5 | Φ12.2 | 3.5 | 7 | 14.5 | 20.5 | 16 | 17.7 | 1 |
| RMW16S-8B | RMW16S-8S | M16×1.5 | Φ16.2 | 4 | 8 | 9 | 23.5 | 19 | 21 | 1 |
| RMW16L-8B | RMW16L-8S | M16×1.5 | Φ16.2 | 4 | 8 | 15 | 24 | 19 | 21 | 1 |
| RMW20S-12B | RMW20S-12S | M20×1.5 | Φ20.2 | 6 | 12 | 10 | 29 | 24 | 26.2 | 1 |
| RMW20L-12B | RMW20L-12S | M20×1.5 | Φ20.2 | 6 | 12 | 15 | 28.5 | 24 | 26.2 | 1 |
| RMW25L-17B | RMW25L-17S | M25×1.5 | Φ25.2 | 11 | 17 | 15 | 35 | 33 | 36.2 | 1 |
| RMW32L-21B | RMW32L-21S | M32×1.5 | Φ32.3 | 13 | 21 | 15 | 38 | 36 | 39.5 | 1 |
| RMW40L-27B | RMW40L-27S | M40×1.5 | Φ40.3 | 18 | 27 | 18 | 43.5 | 45.7 | 50.5 | 1 |
| RMW50L-38B | RMW50L-38S | M50×1.5 | Φ50.4 | 27 | 38 | 20 | 50.5 | 60 | 66.5 | 1 |
| RMW10L-6B-P | RMW10L-6S-P | M10×1.5 | Φ10.2 | 3 | 6 | 13 | 20.5 | 13 | 14.4 | 100 |
| RMW12S-7B-P | RMW12S-7S-P | M12×1.5 | Φ12.2 | 3.5 | 7 | 9 | 20.5 | 16 | 17.6 | 100 |
| RMW12L-7B-P | RMW12L-7S-P | M12×1.5 | Φ12.2 | 3.5 | 7 | 14.5 | 20.5 | 16 | 17.7 | 100 |
| RMW16S-8B-P | RMW16S-8S-P | M16×1.5 | Φ16.2 | 4 | 8 | 9 | 23.5 | 19 | 21 | 100 |
| RMW16L-8B-P | RMW16L-8S-P | M16×1.5 | Φ16.2 | 4 | 8 | 15 | 24 | 19 | 21 | 100 |
| RMW20S-12B-P | RMW20S-12S-P | M20×1.5 | Φ20.2 | 6 | 12 | 10 | 29 | 24 | 26.2 | 100 |
| RMW20L-12B-P | RMW20L-12S-P | M20×1.5 | Φ20.2 | 6 | 12 | 15 | 28.5 | 24 | 26.2 | 100 |

# RMW series silicone sealing insert weatherproof test report

Object: Cut into a piece of the silicone sealing insert from RMW series and attach it onto an aluminium plate.
For comparison, NBR sealing insert from our RM and EPDM sealing insert from another manufacturer is also attached for comparison purposes.

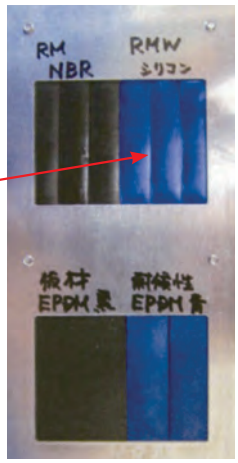


Before

After

## Testing conditions

**Equipment :** 7.5kW Super Xenon Weather Meter SX75 (Suga Test Instruments Co., Ltd.- http://www.sugatest.co.jp/english/)
**Conditions :** JIS B7754 : 1991
Testing with an authorized Xenon arc lamp weathering test equipment under the conditions denoted below.
Irradiance : 180W/$m^2$ at 300-400nm
Black Panel Temperature : 63±3°C  Humidity Range : 50±10%
Cycle Conditions : 120 minutes cycle (18 minutes irradiation + water spray - 102 minutes irradiation)
**Time period :** 2,000 hours (equivalent to a period of 4 years under natural conditions)
**Total radiant exposure :** 1296MJ/$m^2$

## Test result (visual / touch inspection)

**Silicone sealing insert material :** No cracks, no gloss transition, no powder - no appearance change at all.  Flexibility remains unchanged.

Before

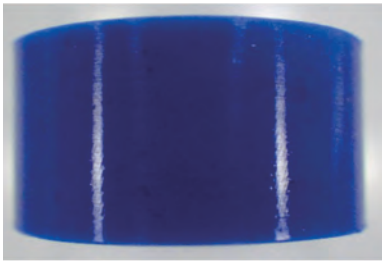

After

**NBR material from our RM series :** Lost glossiness on the surface and material is stiffened.

Before

After

**EPDM material from weatherproof cable gland of another manufacturer :** Cracked, color drastically faded and powder appeared on the surface.

Before

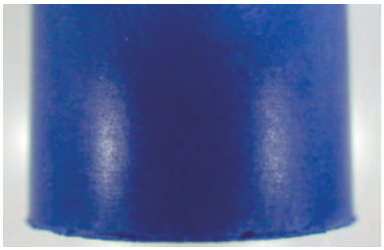

After

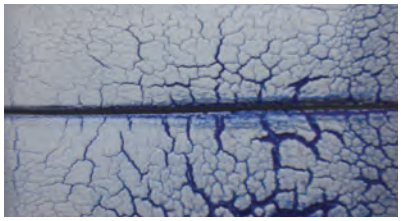

# RM series POLYAMIDE CABLE GLAND

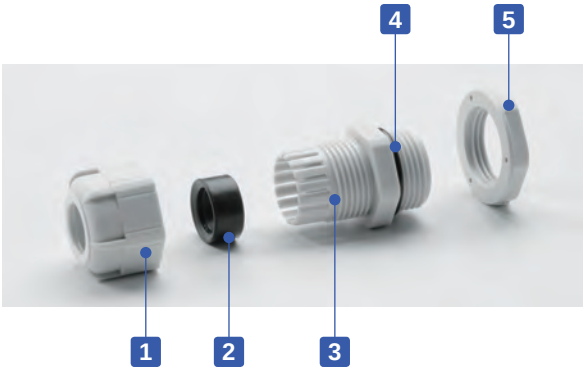


- Low cost cable glands made from polyamide material.
- Wide selection, for M8 ~ M63, suitable for Φ1mm ~ Φ44 mm cable.
- High oil resistant NBR rubber sealing and O-ring.
- IP67 protection class.

**Components**

■ PA = Polyamide

| No. | Part name | Material |
|---|---|---|
| 1 | Cap | PA66 UL94V-2 |
| 2 | Sealing insert | NBR |
| 3 | Connector | PA66 UL94V-2 |
| 4 | O-ring | NBR |
| 5 | Lock nut | PA66 UL94V-2 |

## RM dimensions

■ DXF/DWG/PDF drawings available on our website.

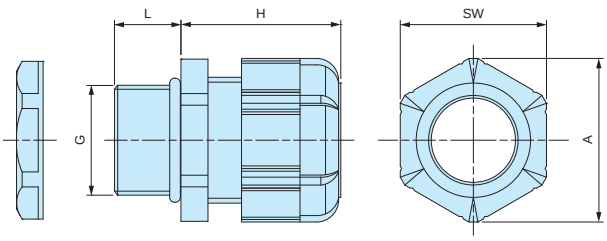


**Technical Data**

Protection class: IP67
Operating temperature: -20°C ~ +80°C

■ Lock nut is not included for RM8S-2.5, 8S-4, and 10S-6 models.
Please drill a proper thread hole into the enclosure for installation.

**Product no. / Dimensions**

| Product no. | | G | | Cable range | | L | H Max | SW | A | Pack of |
|---|---|---|---|---|---|---|---|---|---|---|
| ● Black | ● Light gray | Thread size | Mounting hole | Min | Max | | | | | |
| RM8S-2.5B | RM8S-2.5S | M8×1.25 | — | 1 | 2.5 | 7.5 | 19.5 | 11.8 | 13.5 | 1 |
| RM8L-2.5B | RM8L-2.5S | M8×1.25 | Φ8.2 | 1 | 2.5 | 13 | 19.5 | 11.8 | 13.5 | 1 |
| RM8S-4B | RM8S-4S | M8×1.25 | — | 2.5 | 4 | 7.5 | 19.5 | 11.8 | 13.5 | 1 |
| RM8L-4B | RM8L-4S | M8×1.25 | Φ8.2 | 2.5 | 4 | 13 | 19.5 | 11.8 | 13.5 | 1 |
| RM10S-6B | RM10S-6S | M10×1.5 | — | 3 | 6 | 8 | 20.5 | 13 | 14.4 | 1 |
| RM10L-6B | RM10L-6S | M10×1.5 | Φ10.2 | 3 | 6 | 13 | 20.5 | 13 | 14.4 | 1 |
| RM12S-7B | RM12S-7S | M12×1.5 | Φ12.2 | 3.5 | 7 | 9 | 20.5 | 16 | 17.6 | 1 |
| RM12L-7B | RM12L-7S | M12×1.5 | Φ12.2 | 3.5 | 7 | 14.5 | 20.5 | 16 | 17.7 | 1 |
| RM16S-8B | RM16S-8S | M16×1.5 | Φ16.2 | 4 | 8 | 9 | 23.5 | 19 | 21 | 1 |
| RM16L-8B | RM16L-8S | M16×1.5 | Φ16.2 | 4 | 8 | 15 | 24 | 19 | 21 | 1 |
| RM20S-12B | RM20S-12S | M20×1.5 | Φ20.2 | 6 | 12 | 10 | 29 | 24 | 26.2 | 1 |
| RM20L-12B | RM20L-12S | M20×1.5 | Φ20.2 | 6 | 12 | 15 | 28.5 | 24 | 26.2 | 1 |
| RM25L-17B | RM25L-17S | M25×1.5 | Φ25.2 | 11 | 17 | 15 | 35 | 33 | 36.2 | 1 |
| RM32L-21B | RM32L-21S | M32×1.5 | Φ32.3 | 13 | 21 | 15 | 38 | 36 | 39.5 | 1 |
| RM40L-27B | RM40L-27S | M40×1.5 | Φ40.3 | 18 | 27 | 18 | 43.5 | 45.7 | 50.5 | 1 |
| RM50L-38B | RM50L-38S | M50×1.5 | Φ50.4 | 27 | 38 | 20 | 50.5 | 60 | 66.5 | 1 |
| RM63L-44B | RM63L-44S | M63×1.5 | Φ63.4 | 37 | 44 | 20 | 53 | 68 | 75.5 | 1 |
| RM10L-6B-P | RM10L-6S-P | M10×1.5 | Φ10.2 | 3 | 6 | 13 | 20.5 | 13 | 14.4 | 100 |
| RM12S-7B-P | RM12S-7S-P | M12×1.5 | Φ12.2 | 3.5 | 7 | 9 | 20.5 | 16 | 17.6 | 100 |
| RM12L-7B-P | RM12L-7S-P | M12×1.5 | Φ12.2 | 3.5 | 7 | 14.5 | 20.5 | 16 | 17.7 | 100 |
| RM16S-8B-P | RM16S-8S-P | M16×1.5 | Φ16.2 | 4 | 8 | 9 | 23.5 | 19 | 21 | 100 |
| RM16L-8B-P | RM16L-8S-P | M16×1.5 | Φ16.2 | 4 | 8 | 15 | 24 | 19 | 21 | 100 |
| RM20S-12B-P | RM20S-12S-P | M20×1.5 | Φ20.2 | 6 | 12 | 10 | 29 | 24 | 26.2 | 100 |
| RM20L-12B-P | RM20L-12S-P | M20×1.5 | Φ20.2 | 6 | 12 | 15 | 28.5 | 24 | 26.2 | 100 |
| RM25L-17B-P | RM25L-17S-P | M25×1.5 | Φ25.2 | 11 | 17 | 15 | 35 | 33 | 36.2 | 100 |

# RSP series STRAIN RELIEF CABLE GLAND

■ Strain relief cap protects cables by preventing it from bending beyond its limit and breaking.

| Technical Data |
|---|
| Protection class : IP67<br>Operating temperature : -20°C ~ +80°C |

## RSP dimensions

■ DXF/DWG/PDF drawings available on our website.

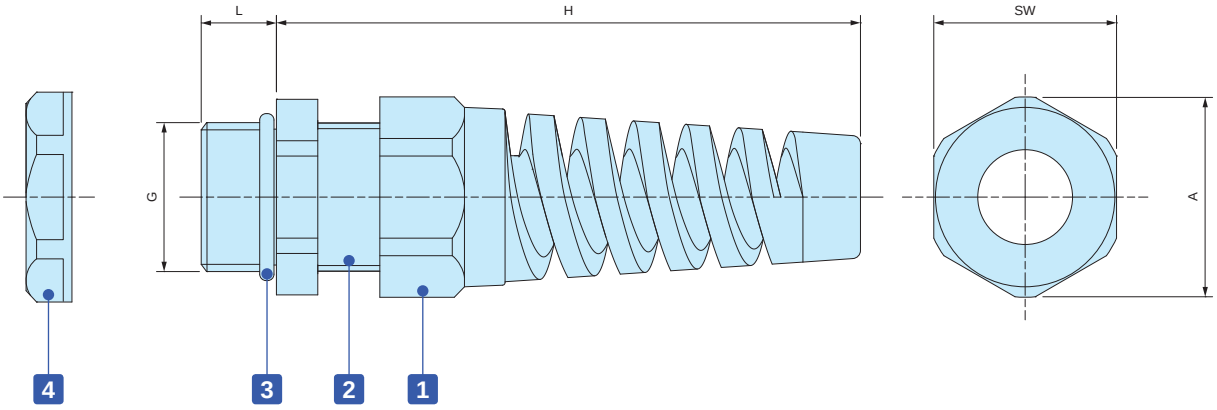


### Components

| No. | Part name | Material |
|---|---|---|
| 1 | Stain relief cap | PA66 UL94V-2 |
| - | Sealing insert | NBR |
| 2 | Connector | PA66 UL94V-2 |
| 3 | O-ring | NBR |
| 4 | Lock nut | PA66 UL94V-2 |

### Product no. / Dimensions

| Product no. | | G | | Cable range | | L | H Max | SW | A | Pack of |
|---|---|---|---|---|---|---|---|---|---|---|
| ● Black | ● Light gray | Thread size | Mounting hole | Min | Max | | | | | |
| RSP12-6B | RSP12-6S | M12×1.5 | Φ12.2 | 3.5 | 6 | 9 | 62 | 16 | 17 | 1 |
| RSP16-8B | RSP16-8S | M16×1.5 | Φ16.2 | 4 | 8 | 9 | 69 | 19.5 | 21 | 1 |
| RSP20-11B | RSP20-11S | M20×1.5 | Φ20.2 | 6 | 11 | 10 | 82 | 24 | 26 | 1 |
| RSP25-16B | RSP25-16S | M25×1.5 | Φ25.2 | 11 | 16 | 12 | 102 | 33 | 36 | 1 |

# SP SERIES SEALING PLUG

## SP dimensions

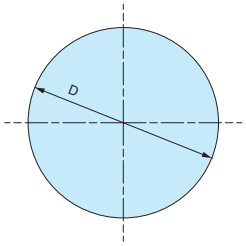


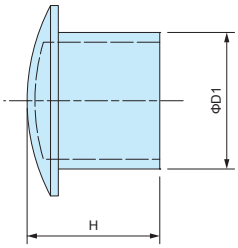


- Material : Nylon

- Sealing plug for cable glands when not in use.
- Maintain a waterproof seal when plugged into the sealing insert on cable glands.

**Product no. / Dimensions**

| Product no. | D | D1 | H | Suitable cable glands | Pack of |
|---|---|---|---|---|---|
| SP-12 | 10.2 | 6 | 15.5 | RMW12, RM12, RMW16, RM16, RPG7, RPG9 | 10 |
| SP-16 | 15.6 | 9.5 | 15.5 | RMW20, RM20, RPG11, RPG13.5 | 10 |
| SP-20 | 19.6 | 13.5 | 16.5 | RPG16 | 10 |
| SP-25 | 24.4 | 17.5 | 17 | RMW25, RM25, RMW32, RM32, RPG21 | 5 |
| SP-40 | 32.5 | 24.5 | 17.5 | RMW40, RM40, RPG29 | 5 |
| SP-50 | 47.2 | 38.9 | 17.6 | RMW50, RM50 | 5 |

# AG series HIGH WATER PROTECTION CABLE GLAND

- High water protection IP68 (1bar / 30min) polyamide cable gland.
- Wide selection, for M8 ~ M50, suitable for Φ2.5mm ~ Φ42 mm cable.
- Super tough and superior heat resistant PA6GF (glass fiber filled PA6) material on cap and connector.
- Safer halogen free, eco-friendly product.

| Technical Data |
|---|
| Protection class: IP68 1bar / 30min<br>Operating temperature: -20°C ~ +100°C<br>Compliant with EN50262 Ver. A |

### AG series

Thicker sealing insert evenly hold a cable by having a larger holding area. Remains durable even after repeated tightening / loosening.

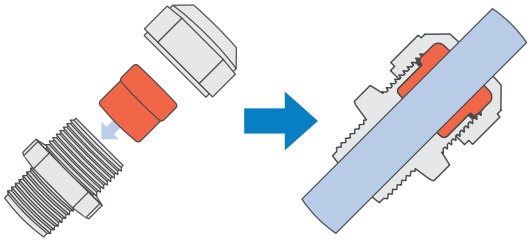

### Lamellar insert type

If over-tightened, it can cause the rubber bush or cable to deform, which can allow water to seep in.

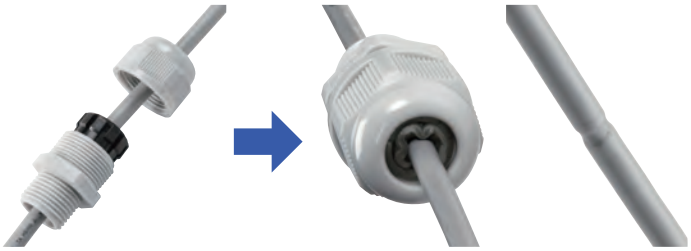

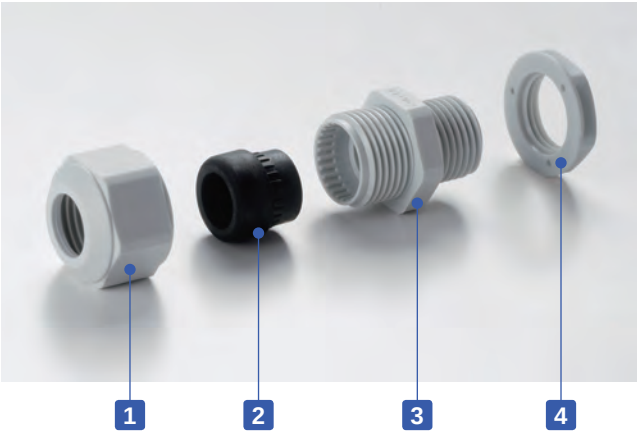


### Components

■ PA6GF = Polyamide6 Glass Fiber Filled

| No. | Part name | Material |
|---|---|---|
| 1 | Cap | PA6GF |
| 2 | Sealing insert | TPE |
| 3 | Connector | PA6GF |
| 4 | Lock nut | PA6 |

■ Lock nut is not included for M8 and M10 sizes.
Please drill a proper thread hole into the enclosure for installation.

■ Proper tightening torque varies by each cable diameter. Tighten the cap until top of the sealing insert forms a small bead between the cap and the cable.

# AGP SERIES SEALING WASHER for AG • AGSP

- Sealing washer for AG series.
- Made from oil resistant NBR material.
- Use in the case of installation on a rough or uneven surfaces.
- Selectable in 7 sizes (from M12 to M50)
- Sealing washer is not necessary for installation on flat surfaces.

## AGP Dimensions

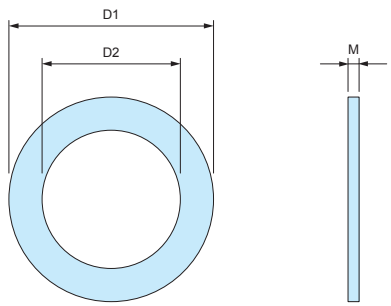

- Material : NBR

**Product no. / Dimensions**

| Product no. | D1 | D2 | M | Suitable cable gland | Pack of |
|---|---|---|---|---|---|
| AGP-12 | 20 | 12 | 1.6 | AG12 | 10 |
| AGP-16 | 23.5 | 16.5 | 2.0 | AG16 | 10 |
| AGP-20 | 29 | 20 | 2.0 | AG20 | 10 |
| AGP-25 | 37 | 25 | 2.0 | AG25 | 10 |
| AGP-32 | 44 | 32 | 2.2 | AG32 | 5 |
| AGP-40 | 52 | 40 | 2.2 | AG40 | 5 |
| AGP-50 | 64 | 50 | 3.1 | AG50 | 5 |

- No optional sealing washer is required when installing on an even surface because of the built-in waterproof rib.

- An optional sealing washer is required when installing on an uneven surface. (See website for more information on the optional sealing washer)

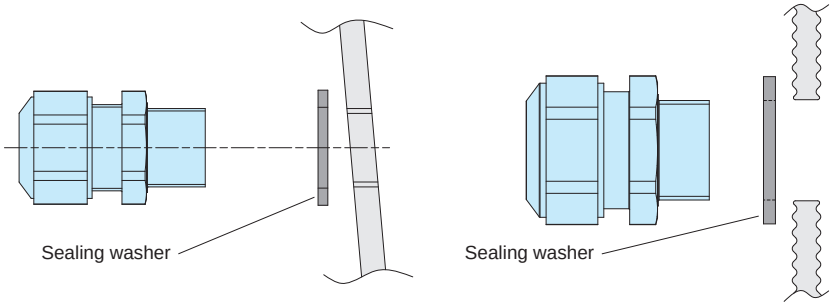

## AG dimensions

- DXF/DWG/PDF drawings available on our website.

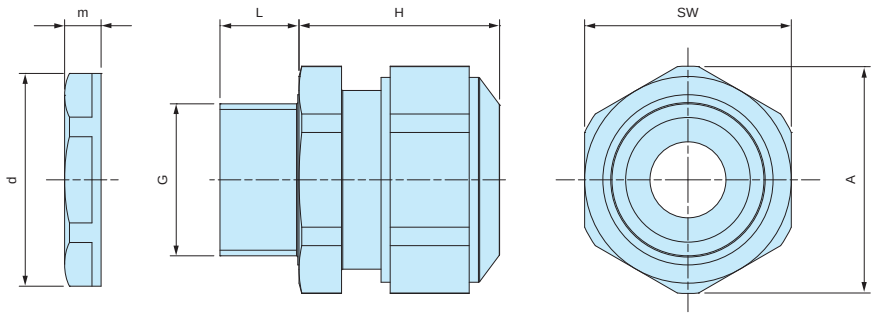


- Lock nut is not included for M8 and M10 sizes.
  Please drill a proper thread hole into the enclosure for installation.

**Product no. / Dimensions**

| Product no. | | G | | Cable range | | L | H Max | SW | A | d | m | Pack of |
|---|---|---|---|---|---|---|---|---|---|---|---|---|
| ● Black | ● Light gray | Thread size | Mounting hole | Min | Max | | | | | | | |
| AG8-3.5B | AG8-3.5S | M8×1.0 | — | 2.5 | 3.5 | 10 | 17 | 12 | 13.2 | — | — | 1 |
| AG8-5B | AG8-5S | M8×1.0 | — | 3.5 | 4.7 | 10 | 17 | 12 | 13.2 | — | — | 1 |
| AG10-6B | AG10-6S | M10×1.0 | — | 4 | 6 | 10 | 19 | 15 | 16.5 | — | — | 1 |
| AG12-5B | AG12-5S | M12×1.5 | Φ12.2 | 3.5 | 4.7 | 12 | 23.5 | 17 | 18.7 | 18.8 | 5 | 1 |
| AG12-6.5B | AG12-6.5S | M12×1.5 | Φ12.2 | 5 | 6.5 | 12 | 23 | 17 | 18.7 | 18.8 | 5 | 1 |
| AG12-8B | AG12-8S | M12×1.5 | Φ12.2 | 6.5 | 7.8 | 12 | 23 | 17 | 18.7 | 18.8 | 5 | 1 |
| AG16-10B | AG16-10S | M16×1.5 | Φ16.2 | 8 | 10 | 12 | 26 | 21 | 23.1 | 24.3 | 5 | 1 |
| AG20-15B | AG20-15S | M20×1.5 | Φ20.2 | 11 | 15 | 13 | 27 | 27 | 29.7 | 29 | 6 | 1 |
| AG25-16B | AG25-16S | M25×1.5 | Φ25.2 | 12.5 | 16 | 13 | 34 | 34 | 37.4 | 36 | 6.7 | 1 |
| AG25-20B | AG25-20S | M25×1.5 | Φ25.2 | 16 | 20 | 13 | 34 | 34 | 37.4 | 36 | 6.7 | 1 |
| AG32-25.5B | AG32-25.5S | M32×1.5 | Φ32.3 | 21 | 25.5 | 15 | 36 | 41 | 45.6 | 46 | 8 | 1 |
| AG40-28.5B | AG40-28.5S | M40×1.5 | Φ40.3 | 24 | 28.5 | 15 | 41 | 50 | 55.4 | 53.5 | 9 | 1 |
| AG40-33B | AG40-33S | M40×1.5 | Φ40.3 | 28.5 | 33 | 15 | 41 | 50 | 55.4 | 53.5 | 9 | 1 |
| AG50-37B | AG50-37S | M50×1.5 | Φ50.4 | 33 | 37 | 16 | 45 | 60 | 65.5 | 66 | 9.6 | 1 |
| AG50-42B | AG50-42S | M50×1.5 | Φ50.4 | 37 | 42 | 16 | 45 | 60 | 65.5 | 66 | 9.6 | 1 |

# AGM series METAL CABLE GLAND

- High water protection IP68 (1bar / 30min) metal cable gland.
- Wide selection, for M6 ~ M50 and PG7 ~ PG16.
  Suitable for Φ2 mm ~ Φ42 mm cable.

| Technical Data |
|---|
| Protection class: IP68 1bar / 30min<br>Operating temperature: -40°C ~ +100°C<br>Compliant with EN50262 Ver. A |

### AGM series

Thicker sealing insert evenly hold a cable by having a larger holding area. Remains durable even after repeated tightening / loosening.

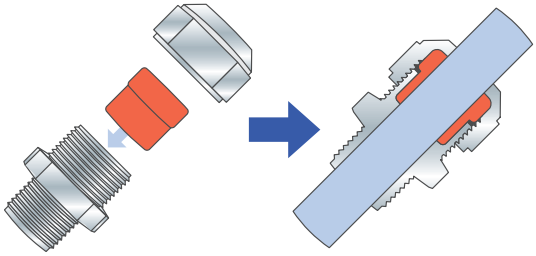

### Lamellar insert type

If over-tightened, it can cause the rubber bush or cable to deform, which can allow water to seep in.

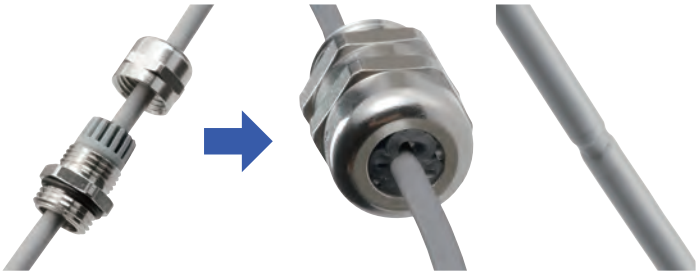

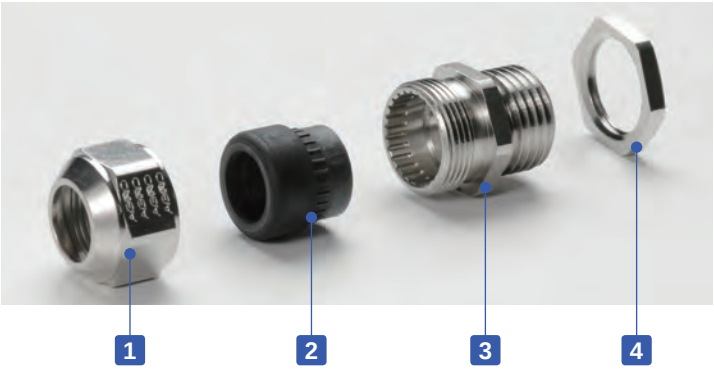


- Proper tightening torque varies by each cable diameter.
  Tighten the cap until top of the sealing insert forms a small bead between the cap and the cable.

### Components

| No. | Part name | Material | Color / Finish |
|---|---|---|---|
| 1 | Cap | Brass | Nickel plated |
| 2 | Sealing insert | TPE | Black |
| 3 | Connector | Brass | Nickel plated |
| - | O-ring | NBR | Black |
| 4 | Lock nut | Brass | Nickel plated |

## AGM dimensions

■ DXF/DWG/PDF drawings available on our website.

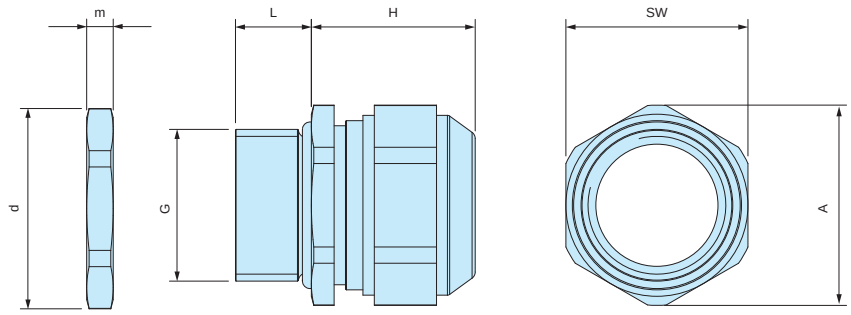


### Product no. / Dimensions

| Product no. | G | | | Cable range | | L | H Max | SW | A | d | m | Pack of |
|---|---|---|---|---|---|---|---|---|---|---|---|---|
| | Thread size | Thread outer dia. | Mounting hole | Min | Max | | | | | | | |
| AGM6-2.5 | M6×1.0 | — | Φ6.2 | 2 | 2.5 | 8 | 12 | 8 | 9 | 10 | 2.8 | 1 |
| AGM6-3 | M6×1.0 | — | Φ6.2 | 2.5 | 3.0 | 8 | 12 | 8 | 9 | 10 | 2.8 | 1 |
| AGM6-3.5 | M6×1.0 | — | Φ6.2 | 3.0 | 3.5 | 8 | 12 | 8 | 9 | 10 | 2.8 | 1 |
| AGM8-5 | M8×1.25 | — | Φ8.2 | 3.5 | 4.7 | 10 | 14 | 11 | 12 | 12 | 3 | 1 |
| AGM10-6 | M10×1.5 | — | Φ10.2 | 4.0 | 6.0 | 10 | 15 | 13 | 14.3 | 14 | 2.8 | 1 |
| AGM12-8 | M12×1.5 | — | Φ12.2 | 6.5 | 8.0 | 10 | 17 | 15 | 16.5 | 16.5 | 2.8 | 1 |
| AGM16-10.5 | M16×1.5 | — | Φ16.2 | 8.0 | 10.5 | 10 | 21 | 18 | 20 | 21 | 3 | 1 |
| AGM20-15 | M20×1.5 | — | Φ20.2 | 11.0 | 15.0 | 10 | 23 | 24 | 26.5 | 26.5 | 3.5 | 1 |
| AGM25-20 | M25×1.5 | — | Φ25.2 | 16.0 | 20.0 | 11 | 28 | 30 | 33 | 33 | 4 | 1 |
| AGM32-25.5 | M32×1.5 | — | Φ32.3 | 21.0 | 25.5 | 13 | 29.5 | 36 | 39.5 | 39.5 | 4 | 1 |
| AGM40-28.5 | M40×1.5 | — | Φ40.3 | 24.0 | 28.5 | 13 | 32 | 46 | 50.7 | 51 | 5 | 1 |
| AGM40-33 | M40×1.5 | — | Φ40.3 | 28.5 | 33.0 | 13 | 32 | 46 | 50.7 | 51 | 5 | 1 |
| AGM50-37 | M50×1.5 | — | Φ50.4 | 33.0 | 37.0 | 14 | 34 | 55 | 59.7 | 60 | 5.5 | 1 |
| AGM50-42 | M50×1.5 | — | Φ50.4 | 37.0 | 42.0 | 14 | 34 | 55 | 59.7 | 60 | 5.5 | 1 |

# AGE SERIES EMC SHIELDED CABLE GLAND

- Optimal contact spring provides excellent shield contact and the smallest possible transfer impedance.
- Clawed lock nut makes a good EMC shield contact possible on conductive enclosures.
- Shape of the contact spring not only allows for a large clamping range to the shield but also enables easy and faster installation and re-installation.
- 2-piece detachable sealing inserts can be adapted to the wider existing cable diameter on site.
  (AGE12 available only with 1-piece sealing insert)

**Technical Data**

Protection class : IP68 2bar / 30min, IP69K
20m depth immersion in 30 minutes
Operating temperature : -60°C ~ +100°C
Compliant with IEC62444 Var. A

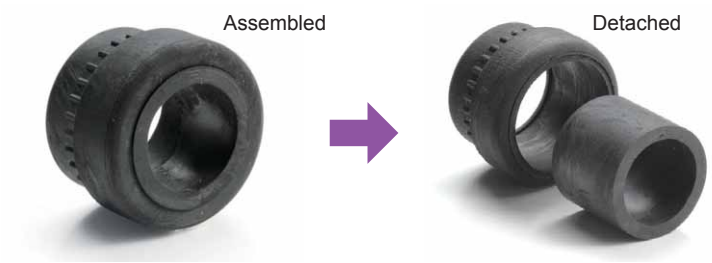


**Cable Range**

| No. | Sealing insert type | |
|---|---|---|
| | Assembled | Detached |
| AGE16-10.5 | Φ 6 ~ Φ 7.5 | Φ 7.5 ~ Φ10.5 |
| AGE20-15 | Φ 8 ~ Φ10.5 | Φ10.5 ~ Φ15 |
| AGE25-20 | Φ12.5 ~ Φ15 | Φ15 ~ Φ20 |
| AGE32-25 | Φ17 ~ Φ20 | Φ20 ~ Φ25 |

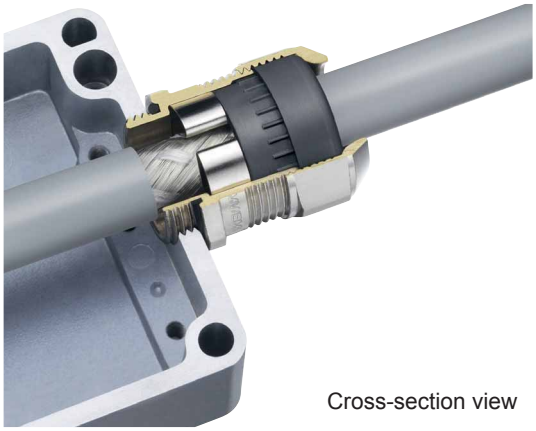

Cross-section view

**Components**

| No. | Part name | Material | Color / Finish |
|---|---|---|---|
| 1 | Cap | Brass | Nickel plated |
| 2 | Sealing insert | TPE | Black |
| 3 | Connector | Brass | Nickel plated |
| 4 | Contact spring | Stainless steel | Unfinished |
| - | O-Ring | NBR | Black |
| 5 | Lock-nut | Brass | Nickel plated |

## INSTALLATION Instruction

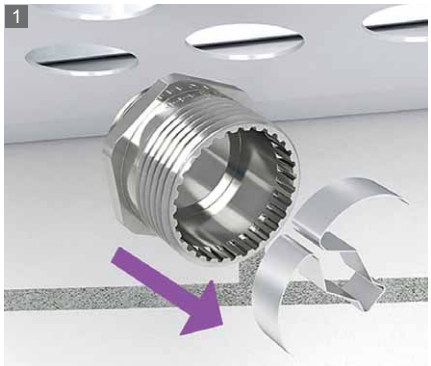


Remove the contact spring from the connector.

Install the connector onto the enclosure.

Strip the cable.

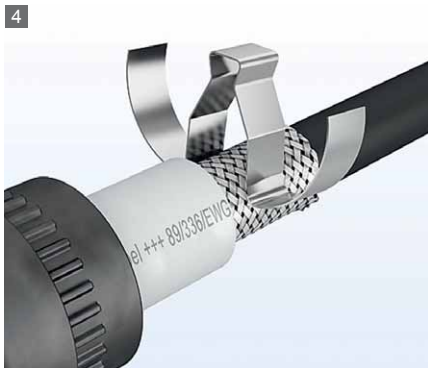


Clip the contact spring on the shielded cable.

Pass the cable through the Sealing insert and cap.

Tighten the cap to complete.

## AGE dimensions

■ DXF/DWG/PDF drawings available on our website.

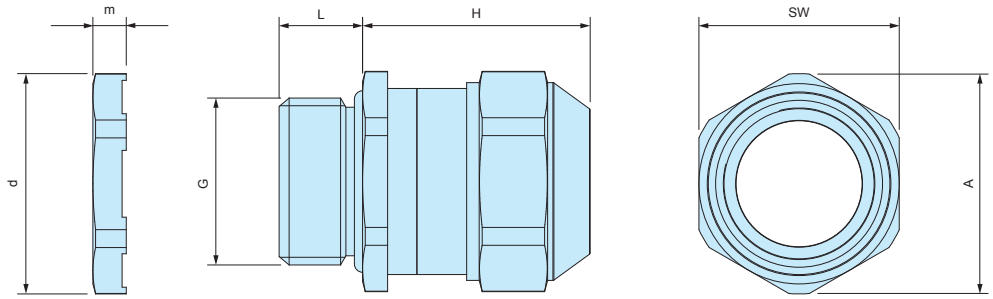


**Product no. / Dimensions**

| Product no. | G | | Cable range | | L | H Max | SW | A | d | m | Pack of |
|---|---|---|---|---|---|---|---|---|---|---|---|
| | Thread size | Mounting hole | Min | Max | | | | | | | |
| AGE12-5 | M12×1.5 | Φ12.2 | 3.5 | 5.0 | 10 | 22 | 15 | 16.5 | 16.5 | 3.5 | 1 |
| AGE12-6.5 | M12×1.5 | Φ12.2 | 5.0 | 6.5 | 10 | 22 | 15 | 16.5 | 16.5 | 3.5 | 1 |
| AGE16-10.5 | M16×1.5 | Φ16.2 | 6.0 | 10.5 | 10 | 25 | 18 | 20 | 21 | 3.5 | 1 |
| AGE20-15 | M20×1.5 | Φ20.2 | 8.0 | 15.0 | 10 | 27 | 24 | 26.5 | 26.5 | 4 | 1 |
| AGE25-20 | M25×1.5 | Φ25.2 | 12.5 | 20.0 | 11 | 33 | 30 | 33 | 33 | 4 | 1 |
| AGE32-25 | M32×1.5 | Φ32.3 | 17.0 | 25.0 | 13 | 34 | 36 | 39.5 | 39.5 | 5 | 1 |

# AGH SERIES HEAT RESISTANT METAL CABLE GLAND

- Heat resistant sealing insert made of FPM material. Resistant up to 200°C
- IP68 1bar / 30min high performance waterproof cable gland.

| Technical Data |
|---|
| Protection class : Protection class IP68 1bar / 30min<br>10m depth immersion in 30 minutes<br>Operating temperature : -40°C ~ +200°C<br>Compliant with EN50262 Var. A |

### AGH series

Thicker sealing insert evenly clasp onto the cable by having a larger area. Remains durable even after repeated tightening / loosening.

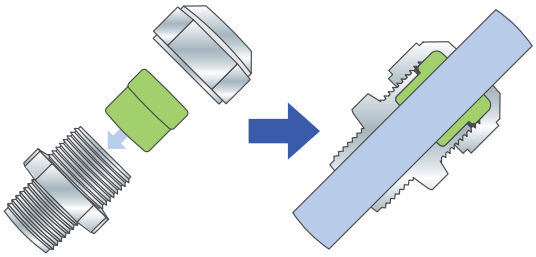

### Conventional cable gland

If over-tightened, it can cause the rubber bush or cable to deform, which may allow water to seep in.

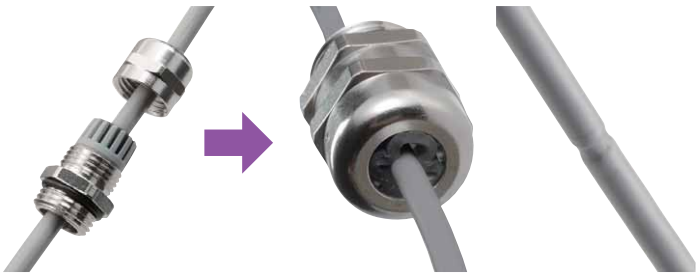

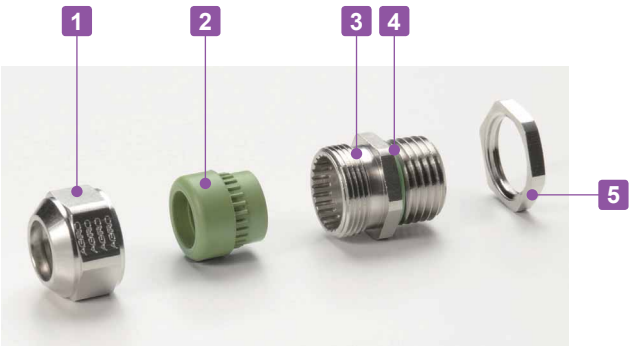


- Tightening torque varies depending on the cable diameter. Tighten until the sealing insert protrudes slightly from the cap.

### Components

| No. | Part name | Material | Color / Finish |
|---|---|---|---|
| 1 | Cap | Brass | Nickel plated |
| 2 | Sealing insert | FPM | Green |
| 3 | Connector | Brass | Nickel plated |
| 4 | O-Ring | FPM | Green |
| 5 | Lock-nut | Brass | Nickel plated |

## AGH dimensions

■ DXF/DWG/PDF drawings available on our website.

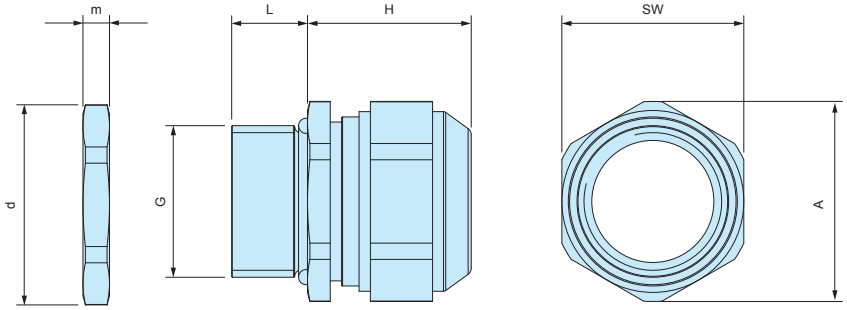


**Product no. / Dimensions**

| Product no. | G | | Cable range | | L | H Max | SW | A | d | m | Pack of |
|---|---|---|---|---|---|---|---|---|---|---|---|
| | Thread size | Mounting hole | Min | Max | | | | | | | |
| AGH10-6 | M10×1.5 | Φ10.2 | 4.0 | 6.0 | 10 | 15 | 13 | 14.3 | 14.2 | 3 | 1 |
| AGH12-8 | M12×1.5 | Φ12.2 | 6.5 | 8.0 | 10 | 17 | 15 | 16.5 | 16.5 | 3 | 1 |
| AGH16-10.5 | M16×1.5 | Φ16.2 | 8.0 | 10.5 | 10 | 20 | 18 | 20 | 21 | 3 | 1 |
| AGH20-15 | M20×1.5 | Φ20.2 | 11.0 | 15.0 | 10 | 23 | 24 | 26.5 | 26.3 | 3.5 | 1 |
| AGH25-20 | M25×1.5 | Φ25.2 | 16.0 | 20.0 | 11 | 27 | 30 | 33 | 33 | 4 | 1 |
| AGH32-25.5 | M32×1.5 | Φ32.3 | 21.0 | 25.5 | 13 | 28.5 | 36 | 39.7 | 39.7 | 4 | 1 |

# PMF-6B SMALL PROTECTIVE VENT

NEW

IP68

Application example

- Small and screw-in protective vent suitable for compact, and hand-held type devices.
- IP68 protection class (water depth 2 meters / 60 mins) and -40°C ~ +150°C operating temperature range allows it to be used in various environments.
- Suitable for enclosures with capacities of 2.0 litres or under.
- For outdoor use, installation on the side of the enclosure unit is recommended.

## PMF-6B dimensions

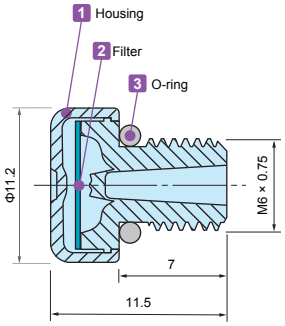


## Hole milling drawings

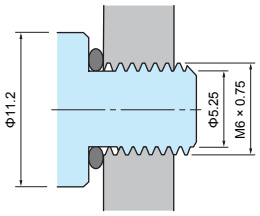


## Installation drawings

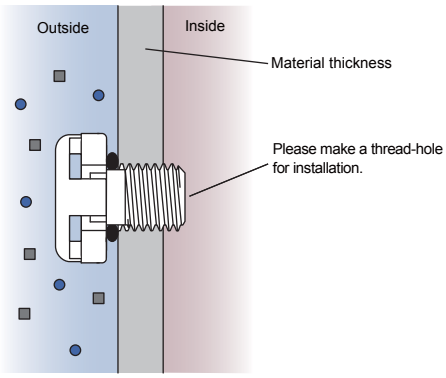


### Technical Data

| | |
|---|---|
| Airflow | 300ml / min (dp = 7 kPa) |
| Recommended Torque | 0.2 ~ 0.4 N • m |
| Certifications | IEC60529 (Protection class test) : IP66 • IP67 • IP68<br>IEC60068-2-1, 2, 14 (Heat resistance test) : -40°C ~ +150°C<br>IEC60068-2-78 (Humidity test) : 85°C • 85% humidity • 1000 hours<br>IEC60068-2-64 (Vibration test)<br>UL94V-0 (Flame-resistant) • UL746C f1 |

### Product no. / Dimensions

| Product no. | Material | | | G | |
|---|---|---|---|---|---|
| ● Black | 1 Housing | 2 Filter | 3 O-ring | Thread size | Mount hole |
| PMF-6B | PA6 (Body) • PA66 (Cap) | PTFE | Silicone | M6 x 0.75 | — |

# PMF-12M STAINLESS STEEL PROTECTIVE VENT

NEW

IP68 IP69K

- Stainless steel protective vent for superior durability and chemical resistance.
- IP68 protection class (water depth 2 meters / 60 mins) and -40°C ~ +125°C operating temperature range allows it to be used in various environments.
- Suitable for enclosures with capacities of 20 liters or under.
- For outdoor use, installation on the side of the enclosure unit is recommended.

## PMF-12M dimensions

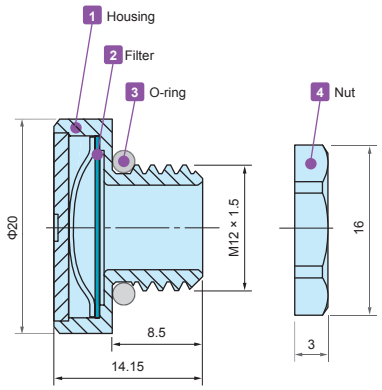


## Hole milling drawings

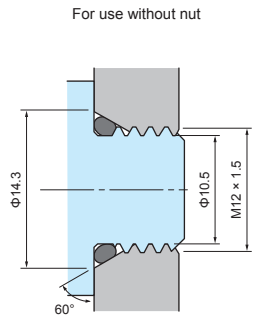


- While Φ12.2mm through-hole is sufficient for installation, 60° angle tapered hole is recommended to prevent deformation of the O-ring.

## Installation drawings

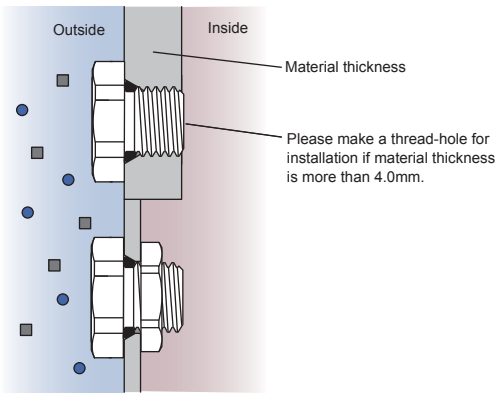


- If used with a lock nut, material thickness should not exceed 4.0mm.

### Technical Data

| | |
|---|---|
| Airflow | 1600ml / min (dp = 7 kPa) |
| Recommended Torque | 0.6 ~ 1.2 N • m |
| Certifications | IEC60529 (Protection class test) : IP66 • IP67 • IP68 • IP69K<br>IEC60068-2-1, 2, 14 (Heat resistance test) : -40°C ~ +125°C<br>IEC60068-2-78 (Humidity test) : 85°C • 85% humidity • 1000 hours<br>IEC60068-2-64 (Vibration test) |

### Product no. / Dimensions

| Product no. | Material | | | | G | | Nut SW |
|---|---|---|---|---|---|---|---|
| Metalic | 1 Housing | 2 Filter | 3 O-ring | 4 Nut | Thread size | Mount hole | |
| PMF-12M | Stainless steel | PTFE | Silicone | Brass • Nickel plated | M12 x 1.5 | Φ12.2 | 15 |

# PMF series PROTECTIVE VENT

## Pressure Equalization / Ventilation

Application Example

- Protective vent protects the enclosure from deformation by equalizing internal and external pressure differences, as well as venting the gas generated within the enclosure.
- IP68 protection class (water depth 2 meters / 60 mins) with an operating temperature range -40°C ~ +125°C allows them to be used in harsh environments.
- PMF-6B model is suitable for enclosures with capacities of up to 2.0 liters. PMF-12 and PMF-12HS models are suitable for up to 5 and 50 liters respectively.
- Recommended to be installed at the sides of the enclosure.
- Use in industrial and electrical / electronic products only; not suitable to be used in medical, food and beverage, and cosmetic industries and related industrial equipment.

### PMF dimensions

- DXF/DWG/PDF drawings available on our website.

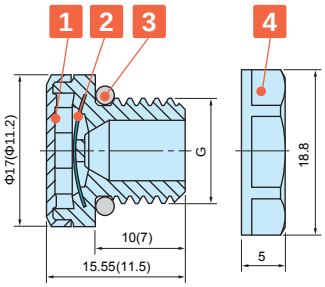


( ) values are for PMF-6B.
Lock nut is not available for PMF-6B

### Hole milling drawings

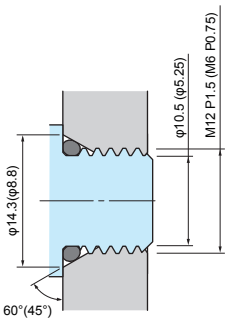


- Recommended for prevention of O-ring deformation during tightening.
  If tightened with a lock nut, a standard through-hole is sufficient for installation.

### Installation drawings

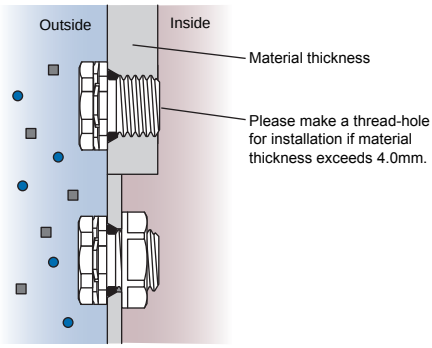


- If used with a lock nut, material thickness should not exceed 4.0mm.

### Technical Data

| Product no. | PMF-6B | PMF-12 | PNF-12HA |
|---|---|---|---|
| Airflow | 300ml / min (dp = 7kPa) | 450ml / min (dp = 7kPa) | 4,000ml / min (dp = 7kPa) |
| Recommended torque | 0.2 ~ 0.4N • m | 0.6 ~ 0.8N • m | 0.6 ~ 0.8N • m |
| Certifications | IEC60529 (Protection class test) : IP65 • IP66 • IP67 • IP68 • IP69K (Not for PMF-6B)<br>IEC60068-2-1, 2, 14 (Heat resistance test) : - 40°C ~ +125°C (~+150°C for PMF-6B)<br>IEC60068-2-78 (Humidity test) : 85°C • 85% humidity • 1,000 hours<br>IEC60068-2-11, 52 (Salt spray test) IEC60068-2-64 (Vibration test)<br>GR-3108-CORE (Corrosive gas test) UL94V-0 (Flame-resistant) • UL746C f1 | | |

### Product no. / Dimensions

| Product no. | | Material | | | | G | | Lock nut SW |
|---|---|---|---|---|---|---|---|---|
| ● Light gray | ● Black | 1 Housing | 2 Filter | 3 O-ring | 4 Lock nut | Thread size | Mount hole | |
| — | PMF- 6B | PA6 / 66 | PTFE | Silicone | — | M6 x P0.75 | — | — |
| PMF-12S | PMF-12B | PA66 / 6 | PTFE | Silicone | PA66 (UL94V-2) | M12 x P1.5 | Φ12.2 | 17 |
| PMF-12HAS | PMF-12HAB | PA66 / 6 | PTFE | Silicone | PA66 (UL94V-2) | M12 x P1.5 | Φ12.2 | 17 |

# PMF-32S LARGE PROTECTIVE VENT

## Pressure Equalization / Ventilation

IP68 IP69K

- Maintaining high airflow for large enclosures in an outdoor environment.
- Protective vent protects the enclosure from deformation by equalizing internal and external pressure differences, as well as venting the gas generated within the enclosure.
- Simple and flat design allows it to be used on a wide variety of enclosure types.
- IP68 protection class rated with an operating temperature range of -40°C ~ +125°C allows it to be used in harsh environments.
- Compliant with Solar industry testing IEC62108 standards.
- Recommended to be installed at the sides of the enclosure.
- Use in industrial and electrical / electronic products only; not suitable to be used in medical, food and beverage, and cosmetic industries and related industrial equipment.

### PMF-32 dimensions

- DXF/DWG/PDF drawings available on our website.

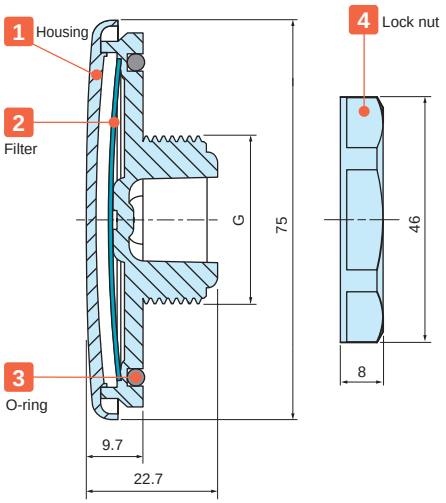


### Hole milling drawings

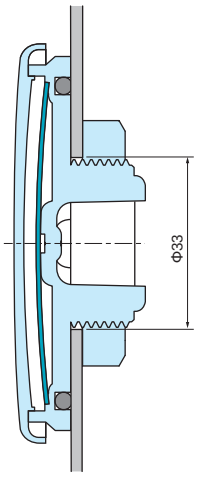


### Installation drawings

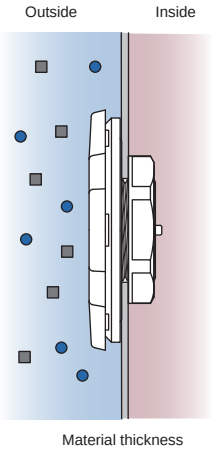


- If used with a lock nut, material thickness should not exceed 5.0mm.

### Technical Data

| | |
|---|---|
| Airflow | 16ℓ / min (dp = 1.2kPa) |
| Recommended torque | 5 N • m |
| Certifications | IEC529, 2nd (Protection class test) : IP66 • IP67 • IP68 • IP69K<br>IEC60068-2-1, 2, 14 (Heat resistance test) : - 40°C ~ +125°C<br>IEC60068-2-78 (Humidity test) : 85°C • 85% humidity • 1,000 hours<br>IEC60068-2-11, 52 (Salt spray test) IEC60068-2-64 (Vibration test)<br>IEC62108, 10.8 • 9 (Solar industry test) : Freezing • High temperature tes • Hail impact test<br>GR-3108-CORE (Corrosive gas test) UL94V-0 (Flame-resistant) • UL746C f1 |

### Product no. / Dimensions

| Product no. | Material | | | | G | | | Lock nut SW |
|---|---|---|---|---|---|---|---|---|
| | 1 Housing | 2 Filter | 3 O-ring | 4 Lock nut | Thread size | Thread diameter | Mount hole | |
| PMF-32S | Polycarbonate | PTFE | Silicone | PA66 | M32 x P1.5 | Φ32 | Φ33 | 41.5 |

# VE8 series ADHESIVE PROTECTIVE VENT FILTER NEW

| Technical Data |
|---|
| Protection class : Dustproof IP6X<br>Waterproof IPX4, IPX7<br>Airflow: 3,300ml/min/cm2 (at 7Kpa)<br>Operating temperature: -40°C ~ +100°C |

- Improved airflow of 3,300ml/min/cm2 as compared to previous VSC series.
- Vent filter protects the enclosure from deformation by equalizing internal and external pressure differences, as well as venting the gas generated within the enclosure.
- Allows water vapor molecules to diffuse through the microporous membrane.
- Highly water and oil repellent membrane protects electronic components from water, corrosive liquids, salts and dust.
- Easy installation adhesive filter.
- Recommended to be adhered onto flat plastic or metallic surfaces.

**CAUTION**

- Install only on the inner surface of the case / box with the membrane and adhesive side facing outwards.
- An initial period of 24 hours is required for the adhesive to properly bond to the surface. Avoid using the vent filter with a heavy load.
- Please do not adhere onto the top-side of enclosures. Rain water etc. will collect on the filter, which will weaken the adhesive seal and prevent proper ventilation.
- After degreasing and cleaning, adhere the filter without touching the center part of the vent filter.
- Use in industrial and electrical / electronic products only; not suitable to be used in medical, food and beverage, and cosmetic industries and related industrial equipment.

## VE8 drawings

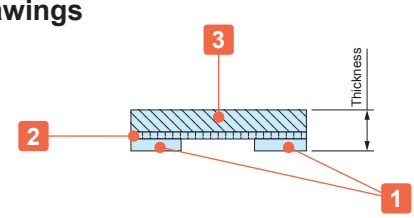


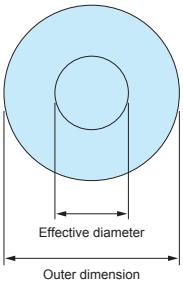


## Installation drawings

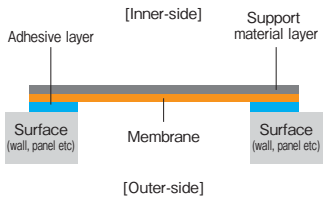


Adhesive type protective vent filter can be installed on any flat surface.

### Components

| No. | Part name | Material | Color |
|---|---|---|---|
| 1 | Adhesive | Acrylic adhesive | Transparent |
| 2 | Filter | ePTFE (Oil-repellent type) | White |
| 3 | Support material | Polyester fabric | White |

### Product no. / Dimensions

| Product no. | Outer dimension (Φ·mm) | Effective diameter (Φ·mm) | Thickness (mm) | Sales unit |
|---|---|---|---|---|
| VE80308 | 7.6 | 3.3 | 0.26 | 8 pcs (per pack) |
| VE80814 | 14.0 | 8.0 | 0.26 | 4 pcs (per pack) |
| VE81221 | 21.5 | 12.5 | 0.26 | 4 pcs (per pack) |
| NEW VE82029S | 29.0 | 20.0 | 0.35 | 2 pcs (per pack) |
| VE80308-S | 7.6 | 3.3 | 0.26 | 96 pcs (per sheet) |
| VE80814-S | 14.0 | 8.0 | 0.26 | 56 pcs (per sheet) |
| VE81221-S | 21.5 | 12.5 | 0.26 | 20 pcs (per sheet) |
| NEW VE82029S-S | 29.0 | 20.0 | 0.35 | 10 pcs (per sheet) |

# VSC SERIES ADHESIVE PROTECTIVE VENT FILTER

| Technical Data |
|---|
| Water Entry Pressure (WEP): ≧ 20.0kPa<br>Airflow: 450cc/cm$^2$ • min at 1.29Kpa |

- Prevents ingression of a variety of contaminants, such as water, dust and other particles.
- Allows water vapor molecules to diffuse through the microporous membrane.
- Recommended to be adhered onto flat plastic or metallic surfaces.

## NOTE

- Surface must be wiped dry before adhering.
- An initial period of a few hours is required for the adhesive to properly bond to the surface.
- Please do not adhere onto the top-side of enclosures. Rain water etc will collect on the filter, which will weaken the adhesive seal and prevent ventilation.

## Drawing

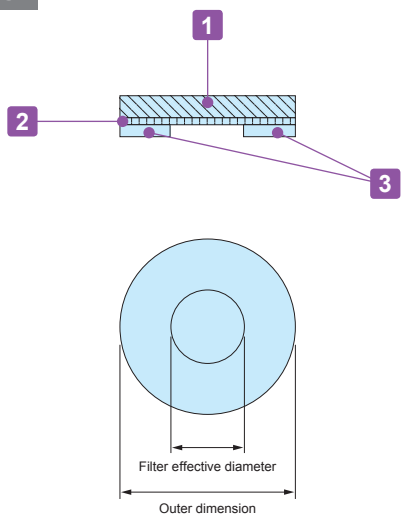


## Installation drawing

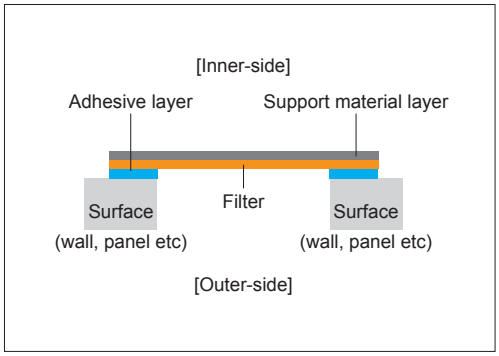


### Components

| No. | Part name | Material | Color |
|---|---|---|---|
| 1 | Adhesive | Acrylic adhesive | Transparent |
| 2 | Filter | PTFE | White |
| 3 | Support material | Polyester fabric | White |

### Product no. / Dimensions

| Product no. | Outer dimension (Φ) | Filter effective diameter (Φ) | Thickness | Sales unit |
|---|---|---|---|---|
| VSC075 | 7.5 | 4.0 | 0.35 | 5 pcs (per pack) |
| VSC130 | 13.0 | 8.0 | 0.35 | 4 pcs (per pack) |
| VSC240 | 24.0 | 16.0 | 0.35 | 4 pcs (per pack) |
| VSC075-S | 7.5 | 4.0 | 0.35 | 100 pcs (per sheet) |
| VSC130-S | 13.0 | 8.0 | 0.35 | 56 pcs (per sheet) |
| VSC240-S | 24.0 | 16.0 | 0.35 | 20 pcs (per sheet) |

# CNC MACHINING

**CNC milling is a form of computer controlled machining. Similar in operation to drilling and cutting, it is able to create various hole styles and shapes by using a rotating cutting tool to bore into the object.**

Extruded aluminium

- Mainly used for plastic, aluminium die-cast, and aluminium extrusion material types.
- Able to perform milling for various shapes and sizes.
- Recommended for small quantity customization.

Aluminium sheet

Diecast aluminium

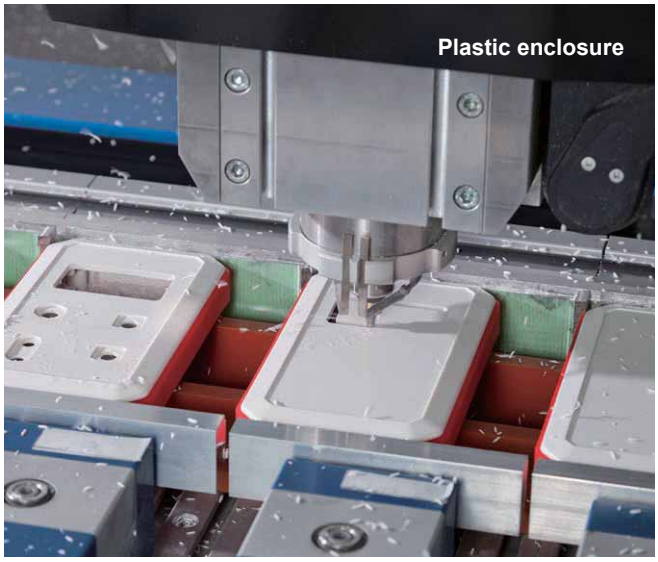
Plastic enclosure

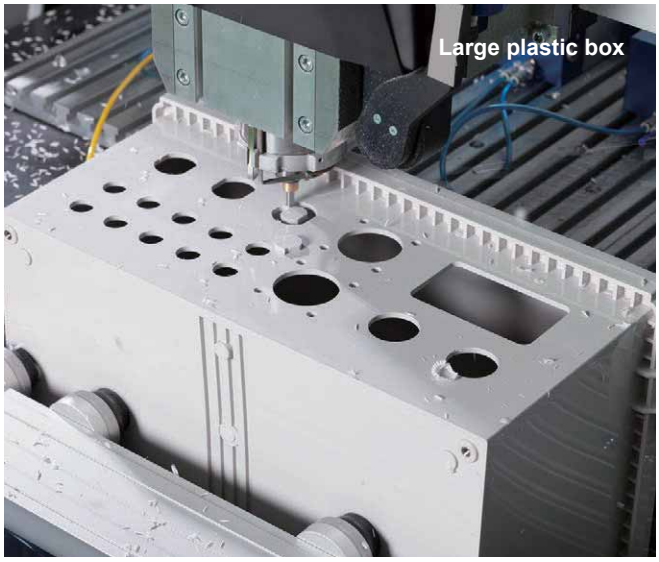
Large plastic box

# ENGRAVING

**By having the drill-head slightly milling the surface, the engraving of fine text or complex designs is able to be performed on a variety of surfaces, be it flat, curved, and so on.**
**Suitable for small batch print, and/or simple lettering. Font shall be similar to VAG Rounded font type.**

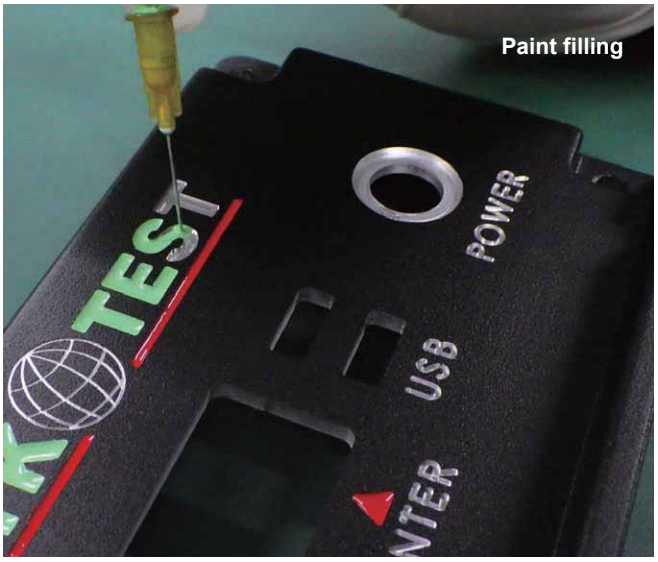

# LASER CUTTING

**Laser cutting utilizes a laser to perform cutting on an object, allowing various types and shapes of holes to be cut.**
**New fiber laser machine allows the processing of aluminium sheets with both high precision and speed.**
**Processing of Pure Aluminium 1050 is also possible with minimal burr as compared to conventional $CO^2$ laser machines, which causes excessive burring.**

# PUNCHING PRESS

**What is punching press? It is a type of machine press used to cut holes in material via the use of various sized die sets.**
**Punching press allows the realization of high cost performance due to its high speed automated turret punching process, which significantly reduces machining lead-time.**
**Due to its ability to create designated sized holes by means of rapid multiple hole punches, this enables it to punch holes of various sizes and types quickly and efficiently.**

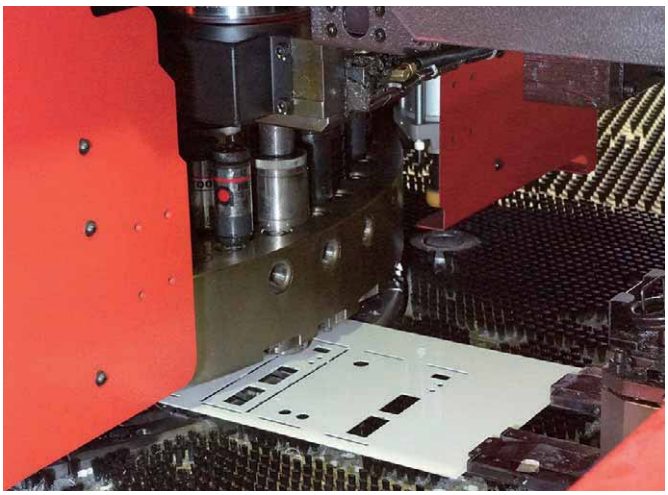

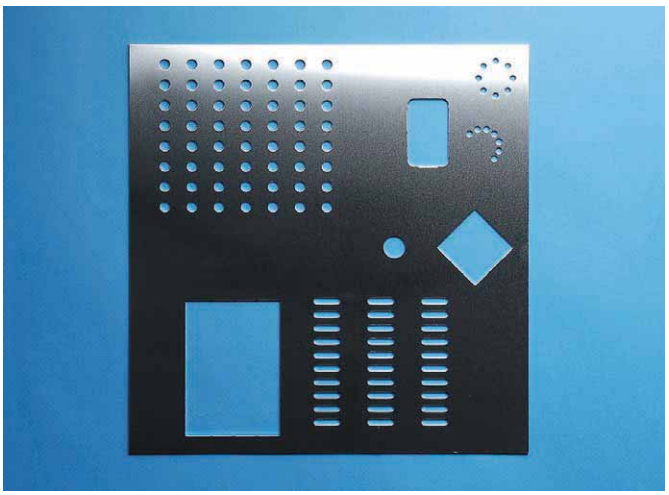

## Circular hole

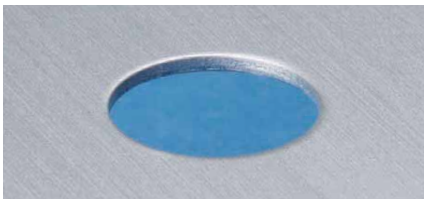

**Circular holes as small as 1.0mm in diameter can be punched .**

## Nibbling press (rectangle)

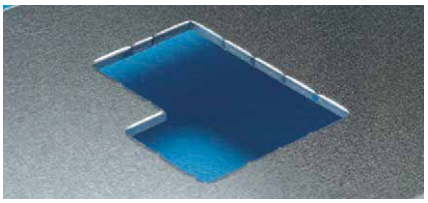

**Complex or large rectangular shapes can be punched out with multiple presses.**

## Nibbling press (round)

**Punching of large circular holes with multiple smaller die strokes.**

## Common connector shapes

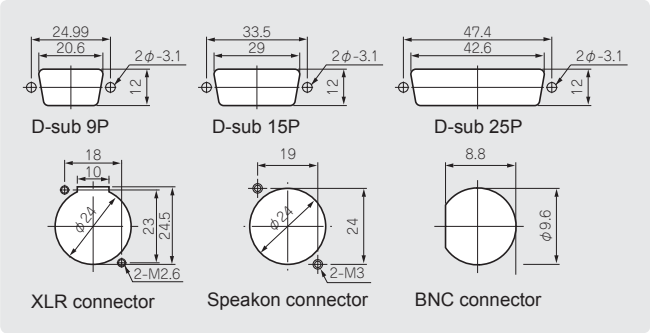


## Unique shapes

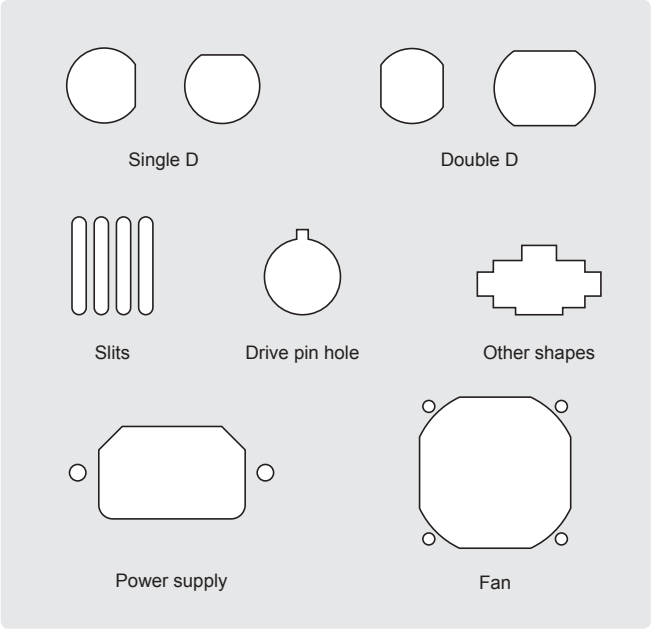


## Burring punch

**Increasing surface area on a thin metallic sheet for screw threads to bore into.**

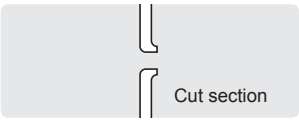

TAKACHI

# DIGITAL PRINTED OVERLAY

## 3 reasons for low initial costs

**Reason ①**

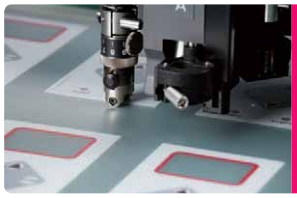

**Cutting process** → Avoiding the cost for cutting die manufacturing via our in-house cutting plotter.

**Reason ②**

**Printing process** → Saving the cost for print plates via utilization of our in-house digital inkjet printer.

**Reason ③**

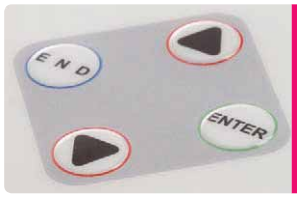


**Embossing process** → Reducing the cost for the embossing die via our new die manufacturing process.

## Comparison of current and previous manufacturing methods

**Current**: Print data creation → Inkjet printing and laminating process → Cutting data creation → Cutting of double-sided tape, pasting, cutting of individual piece

**Previous**: Print plate creation → Printing and laminating process → Cutting die manufacture → Punching of double-sided tape, pasting, punching of individual piece

Cost・Production time

# PRODUCTION PROCESS

1. Inkjet printing on film

2. Laminating

3. Cutting double-sided tape

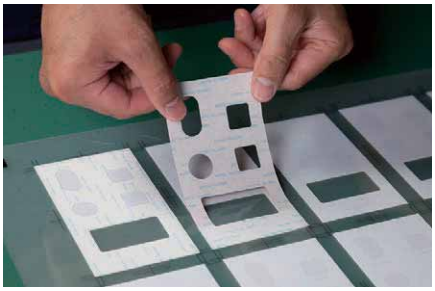

4. Sticking double-sided tape on printed film

5. Cutting the sheet to size

6. Embossing

7. Machining on enclosure

8. Sticking overlay sheet onto enclosure

9. Complete

# CUSTOMIZATION EXAMPLE

# INKJET PRINTING

**Full color digitally designed image can be printed in 1 run.**
**No cost difference regardless of the number of colors used.**

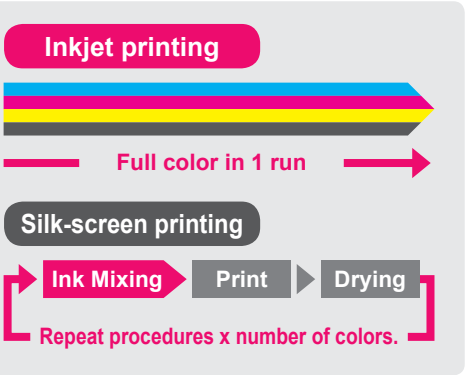

**Low printing cost**

**Full color print possible in small quantities**

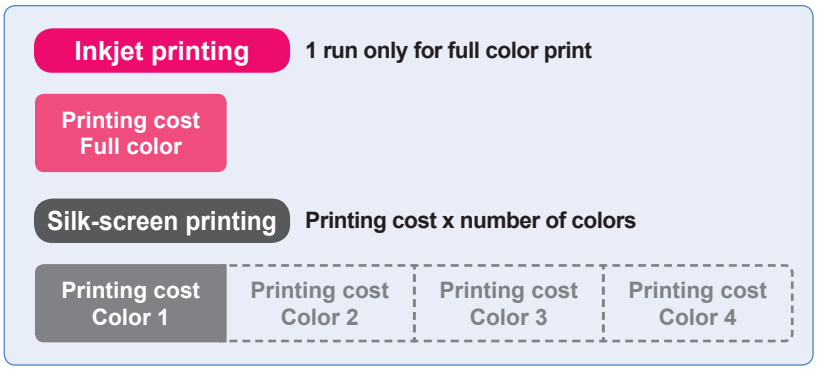

# High quality printing of photo image and color gradation.

**Print photo images in maximum 1,800 x 1,800 dpi quality.**
**Pictures, logos and unique designs with color gradation can be recreated in a high quality print.**

# Maximum printable enclosure size

D 420mm × W 594mm × H 270mm

# Printable on surfaces with height differential

**Printing is possible on recessed, sloped and rounded sections.**

**Gap difference is less than 2.0mm.**

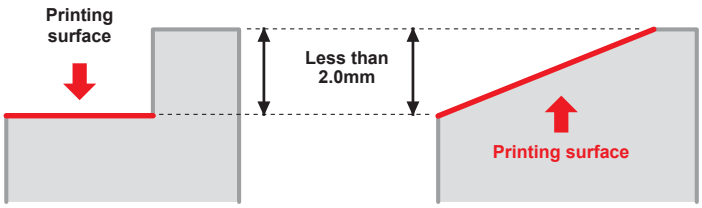


*Not suitable if height difference is more than 2.0mm.

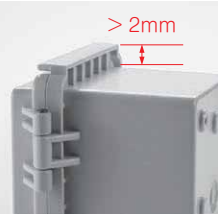


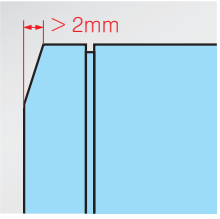


**Printed example**