RMW series WEATHERPROOF CABLE GLAND

IP67

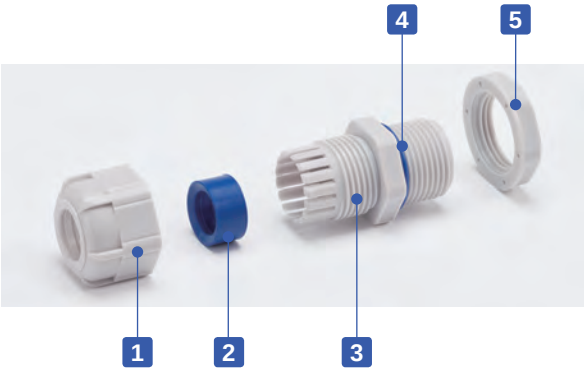

- Weatherproof cable gland equipped with high ultraviolet and degradation resistant silicone sealing insert and O-ring.
- Recommended to use outdoors where waterproofing is critical.
- IP67 protection class.

Components

■ PA = Polyamide

No.	Part name	Material
1	Cap	PA66 UL94V-2
2	Sealing insert	Silicone
3	Connector	PA66 UL94V-2
4	O-ring	Silicone
5	Lock nut	PA66 UL94V-2

RMW dimensions

■ DXF/DWG/PDF drawings available on our website.

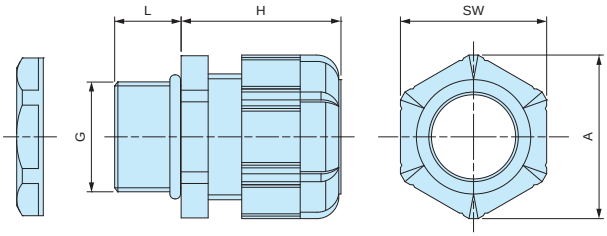

Technical Data

Protection class: IP67
Operating temperature: -20°C ~ +80°C

■ Lock nut is not included for RMW10S-6.
Please drill a proper thread hole into the enclosure for installation.

Product no. / Dimensions

Product no.		G		Cable range		L	H Max	SW	A	Pack of
● Black	● Light gray	Thread size	Mounting hole	Min	Max					
RMW8L-2.5B	RMW8L-2.5S	M8×1.25	Φ8.2	1	2.5	13	19.5	11.8	13.5	1
RMW8L-4B	RMW8L-4S	M8×1.25	Φ8.2	2.5	4	13	19.5	11.8	13.5	1
RMW10S-6B	RMW10S-6S	M10×1.5	—	3	6	8	20.5	13	14.4	1
RMW10L-6B	RMW10L-6S	M10×1.5	Φ10.2	3	6	13	20.5	13	14.4	1
RMW12S-7B	RMW12S-7S	M12×1.5	Φ12.2	3.5	7	9	20.5	16	17.6	1
RMW12L-7B	RMW12L-7S	M12×1.5	Φ12.2	3.5	7	14.5	20.5	16	17.7	1
RMW16S-8B	RMW16S-8S	M16×1.5	Φ16.2	4	8	9	23.5	19	21	1
RMW16L-8B	RMW16L-8S	M16×1.5	Φ16.2	4	8	15	24	19	21	1
RMW20S-12B	RMW20S-12S	M20×1.5	Φ20.2	6	12	10	29	24	26.2	1
RMW20L-12B	RMW20L-12S	M20×1.5	Φ20.2	6	12	15	28.5	24	26.2	1
RMW25L-17B	RMW25L-17S	M25×1.5	Φ25.2	11	17	15	35	33	36.2	1
RMW32L-21B	RMW32L-21S	M32×1.5	Φ32.3	13	21	15	38	36	39.5	1
RMW40L-27B	RMW40L-27S	M40×1.5	Φ40.3	18	27	18	43.5	45.7	50.5	1
RMW50L-38B	RMW50L-38S	M50×1.5	Φ50.4	27	38	20	50.5	60	66.5	1
RMW10L-6B-P	RMW10L-6S-P	M10×1.5	Φ10.2	3	6	13	20.5	13	14.4	100
RMW12S-7B-P	RMW12S-7S-P	M12×1.5	Φ12.2	3.5	7	9	20.5	16	17.6	100
RMW12L-7B-P	RMW12L-7S-P	M12×1.5	Φ12.2	3.5	7	14.5	20.5	16	17.7	100
RMW16S-8B-P	RMW16S-8S-P	M16×1.5	Φ16.2	4	8	9	23.5	19	21	100
RMW16L-8B-P	RMW16L-8S-P	M16×1.5	Φ16.2	4	8	15	24	19	21	100
RMW20S-12B-P	RMW20S-12S-P	M20×1.5	Φ20.2	6	12	10	29	24	26.2	100
RMW20L-12B-P	RMW20L-12S-P	M20×1.5	Φ20.2	6	12	15	28.5	24	26.2	100

RMW series silicone sealing insert weatherproof test report

Object: Cut into a piece of the silicone sealing insert from RMW series and attach it onto an aluminium plate.
For comparison, NBR sealing insert from our RM and EPDM sealing insert from another manufacturer is also attached for comparison purposes.

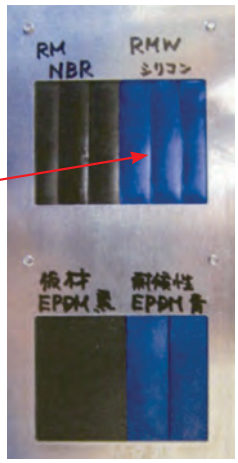

Before

After

Testing conditions

Equipment : 7.5kW Super Xenon Weather Meter SX75 (Suga Test Instruments Co., Ltd.- http://www.sugatest.co.jp/english/)
Conditions : JIS B7754 : 1991
Testing with an authorized Xenon arc lamp weathering test equipment under the conditions denoted below.
Irradiance : 180W/m^2 at 300-400nm
Black Panel Temperature : 63±3°C Humidity Range : 50±10%
Cycle Conditions : 120 minutes cycle (18 minutes irradiation + water spray - 102 minutes irradiation)
Time period : 2,000 hours (equivalent to a period of 4 years under natural conditions)
Total radiant exposure : 1296MJ/m^2

Test result (visual / touch inspection)

Silicone sealing insert material : No cracks, no gloss transition, no powder - no appearance change at all. Flexibility remains unchanged.

Before

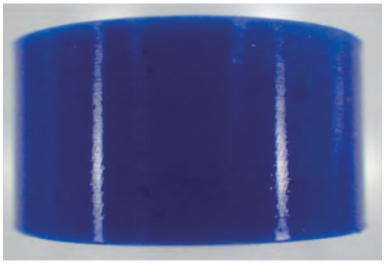

After

NBR material from our RM series : Lost glossiness on the surface and material is stiffened.

Before

After

EPDM material from weatherproof cable gland of another manufacturer : Cracked, color drastically faded and powder appeared on the surface.

Before

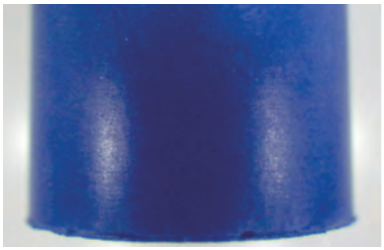

After

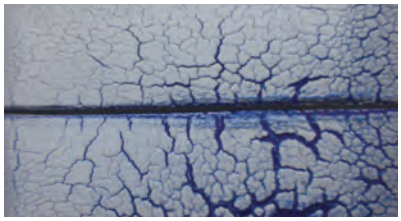

RM series POLYAMIDE CABLE GLAND

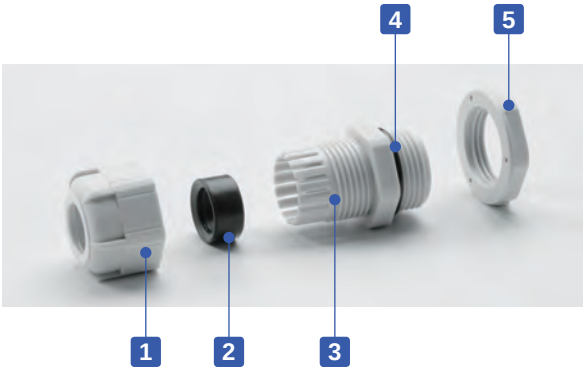

- Low cost cable glands made from polyamide material.
- Wide selection, for M8 ~ M63, suitable for Φ1mm ~ Φ44 mm cable.
- High oil resistant NBR rubber sealing and O-ring.
- IP67 protection class.

Components

■ PA = Polyamide

No.	Part name	Material
1	Cap	PA66 UL94V-2
2	Sealing insert	NBR
3	Connector	PA66 UL94V-2
4	O-ring	NBR
5	Lock nut	PA66 UL94V-2

RM dimensions

■ DXF/DWG/PDF drawings available on our website.

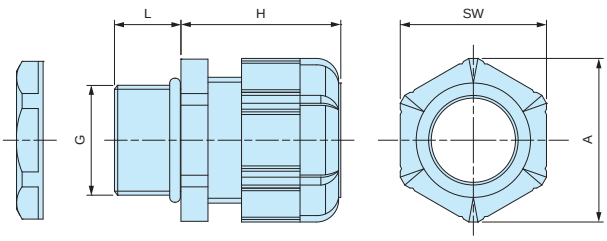

Technical Data

Protection class: IP67
Operating temperature: -20°C ~ +80°C

■ Lock nut is not included for RM8S-2.5, 8S-4, and 10S-6 models.
Please drill a proper thread hole into the enclosure for installation.

Product no. / Dimensions

Product no.		G		Cable range		L	H Max	SW	A	Pack of
● Black	● Light gray	Thread size	Mounting hole	Min	Max					
RM8S-2.5B	RM8S-2.5S	M8×1.25	—	1	2.5	7.5	19.5	11.8	13.5	1
RM8L-2.5B	RM8L-2.5S	M8×1.25	Φ8.2	1	2.5	13	19.5	11.8	13.5	1
RM8S-4B	RM8S-4S	M8×1.25	—	2.5	4	7.5	19.5	11.8	13.5	1
RM8L-4B	RM8L-4S	M8×1.25	Φ8.2	2.5	4	13	19.5	11.8	13.5	1
RM10S-6B	RM10S-6S	M10×1.5	—	3	6	8	20.5	13	14.4	1
RM10L-6B	RM10L-6S	M10×1.5	Φ10.2	3	6	13	20.5	13	14.4	1
RM12S-7B	RM12S-7S	M12×1.5	Φ12.2	3.5	7	9	20.5	16	17.6	1
RM12L-7B	RM12L-7S	M12×1.5	Φ12.2	3.5	7	14.5	20.5	16	17.7	1
RM16S-8B	RM16S-8S	M16×1.5	Φ16.2	4	8	9	23.5	19	21	1
RM16L-8B	RM16L-8S	M16×1.5	Φ16.2	4	8	15	24	19	21	1
RM20S-12B	RM20S-12S	M20×1.5	Φ20.2	6	12	10	29	24	26.2	1
RM20L-12B	RM20L-12S	M20×1.5	Φ20.2	6	12	15	28.5	24	26.2	1
RM25L-17B	RM25L-17S	M25×1.5	Φ25.2	11	17	15	35	33	36.2	1
RM32L-21B	RM32L-21S	M32×1.5	Φ32.3	13	21	15	38	36	39.5	1
RM40L-27B	RM40L-27S	M40×1.5	Φ40.3	18	27	18	43.5	45.7	50.5	1
RM50L-38B	RM50L-38S	M50×1.5	Φ50.4	27	38	20	50.5	60	66.5	1
RM63L-44B	RM63L-44S	M63×1.5	Φ63.4	37	44	20	53	68	75.5	1
RM10L-6B-P	RM10L-6S-P	M10×1.5	Φ10.2	3	6	13	20.5	13	14.4	100
RM12S-7B-P	RM12S-7S-P	M12×1.5	Φ12.2	3.5	7	9	20.5	16	17.6	100
RM12L-7B-P	RM12L-7S-P	M12×1.5	Φ12.2	3.5	7	14.5	20.5	16	17.7	100
RM16S-8B-P	RM16S-8S-P	M16×1.5	Φ16.2	4	8	9	23.5	19	21	100
RM16L-8B-P	RM16L-8S-P	M16×1.5	Φ16.2	4	8	15	24	19	21	100
RM20S-12B-P	RM20S-12S-P	M20×1.5	Φ20.2	6	12	10	29	24	26.2	100
RM20L-12B-P	RM20L-12S-P	M20×1.5	Φ20.2	6	12	15	28.5	24	26.2	100
RM25L-17B-P	RM25L-17S-P	M25×1.5	Φ25.2	11	17	15	35	33	36.2	100

RSP series STRAIN RELIEF CABLE GLAND

■ Strain relief cap protects cables by preventing it from bending beyond its limit and breaking.

Technical Data
Protection class : IP67 Operating temperature : -20°C ~ +80°C

RSP dimensions

■ DXF/DWG/PDF drawings available on our website.

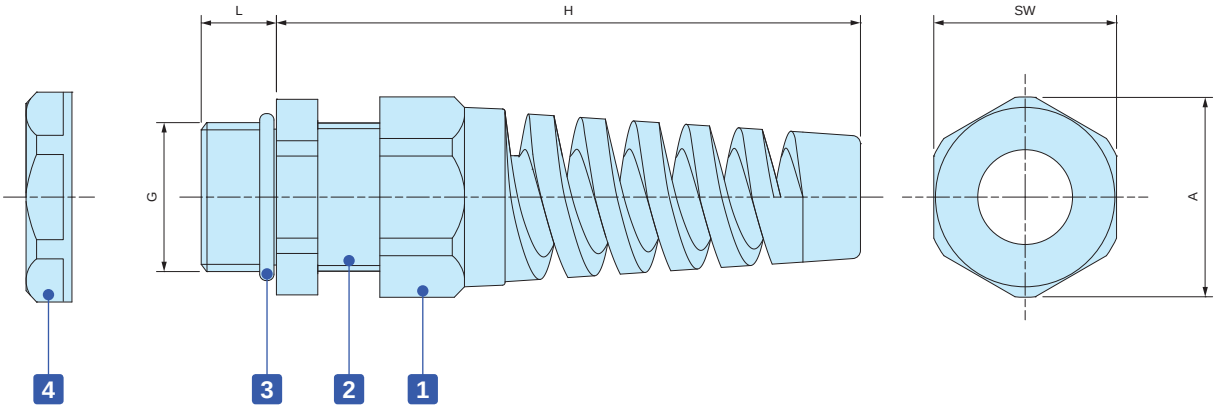

Components

No.	Part name	Material
1	Stain relief cap	PA66 UL94V-2
-	Sealing insert	NBR
2	Connector	PA66 UL94V-2
3	O-ring	NBR
4	Lock nut	PA66 UL94V-2

Product no. / Dimensions

Product no.		G		Cable range		L	H Max	SW	A	Pack of
● Black	● Light gray	Thread size	Mounting hole	Min	Max					
RSP12-6B	RSP12-6S	M12×1.5	Φ12.2	3.5	6	9	62	16	17	1
RSP16-8B	RSP16-8S	M16×1.5	Φ16.2	4	8	9	69	19.5	21	1
RSP20-11B	RSP20-11S	M20×1.5	Φ20.2	6	11	10	82	24	26	1
RSP25-16B	RSP25-16S	M25×1.5	Φ25.2	11	16	12	102	33	36	1

AG series HIGH WATER PROTECTION CABLE GLAND

- High water protection IP68 (1bar / 30min) polyamide cable gland.
- Wide selection, for M8 ~ M50, suitable for Φ2.5mm ~ Φ42 mm cable.
- Super tough and superior heat resistant PA6GF (glass fiber filled PA6) material on cap and connector.
- Safer halogen free, eco-friendly product.

Technical Data
Protection class: IP68 1bar / 30min Operating temperature: -20°C ~ +100°C Compliant with EN50262 Ver. A

AG series

Thicker sealing insert evenly hold a cable by having a larger holding area. Remains durable even after repeated tightening / loosening.

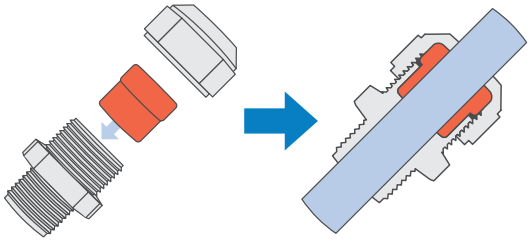

Lamellar insert type

If over-tightened, it can cause the rubber bush or cable to deform, which can allow water to seep in.

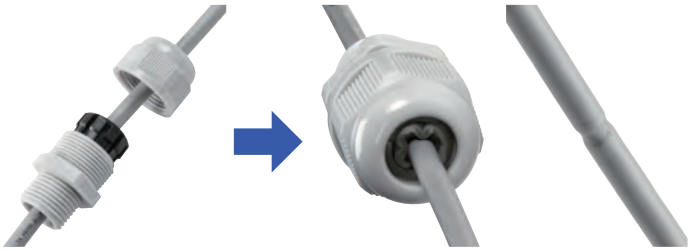

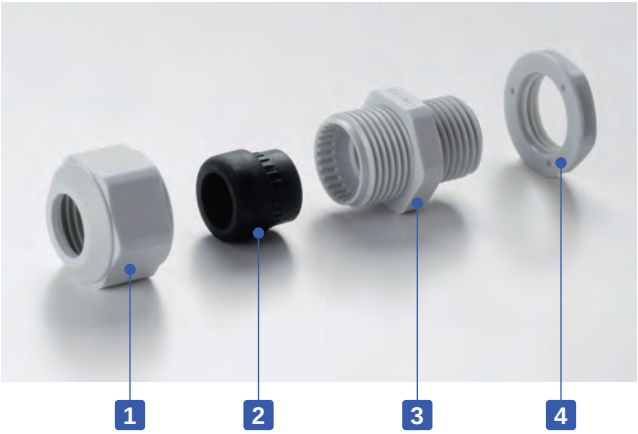

Components

■ PA6GF = Polyamide6 Glass Fiber Filled

No.	Part name	Material
1	Cap	PA6GF
2	Sealing insert	TPE
3	Connector	PA6GF
4	Lock nut	PA6

■ Lock nut is not included for M8 and M10 sizes.
Please drill a proper thread hole into the enclosure for installation.

■ Proper tightening torque varies by each cable diameter. Tighten the cap until top of the sealing insert forms a small bead between the cap and the cable.

- No optional sealing washer is required when installing on an even surface because of the built-in waterproof rib.

- An optional sealing washer is required when installing on an uneven surface. (See website for more information on the optional sealing washer)

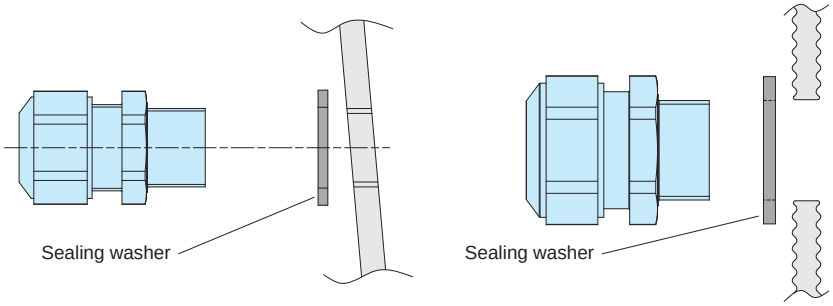

AG dimensions

- DXF/DWG/PDF drawings available on our website.

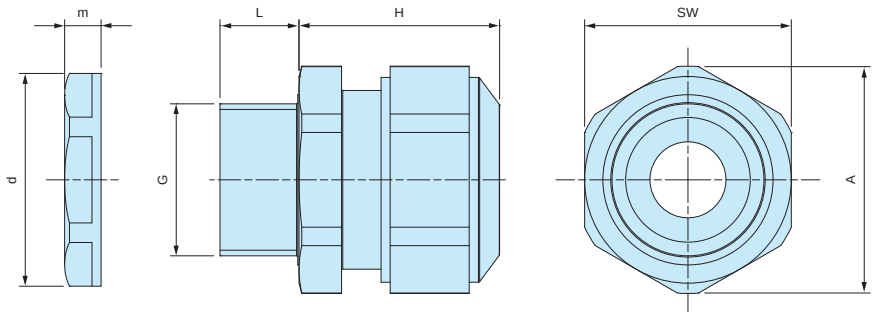

- Lock nut is not included for M8 and M10 sizes.
  Please drill a proper thread hole into the enclosure for installation.

Product no. / Dimensions

Product no.		G		Cable range		L	H Max	SW	A	d	m	Pack of
● Black	● Light gray	Thread size	Mounting hole	Min	Max							
AG8-3.5B	AG8-3.5S	M8×1.0	—	2.5	3.5	10	17	12	13.2	—	—	1
AG8-5B	AG8-5S	M8×1.0	—	3.5	4.7	10	17	12	13.2	—	—	1
AG10-6B	AG10-6S	M10×1.0	—	4	6	10	19	15	16.5	—	—	1
AG12-5B	AG12-5S	M12×1.5	Φ12.2	3.5	4.7	12	23.5	17	18.7	18.8	5	1
AG12-6.5B	AG12-6.5S	M12×1.5	Φ12.2	5	6.5	12	23	17	18.7	18.8	5	1
AG12-8B	AG12-8S	M12×1.5	Φ12.2	6.5	7.8	12	23	17	18.7	18.8	5	1
AG16-10B	AG16-10S	M16×1.5	Φ16.2	8	10	12	26	21	23.1	24.3	5	1
AG20-15B	AG20-15S	M20×1.5	Φ20.2	11	15	13	27	27	29.7	29	6	1
AG25-16B	AG25-16S	M25×1.5	Φ25.2	12.5	16	13	34	34	37.4	36	6.7	1
AG25-20B	AG25-20S	M25×1.5	Φ25.2	16	20	13	34	34	37.4	36	6.7	1
AG32-25.5B	AG32-25.5S	M32×1.5	Φ32.3	21	25.5	15	36	41	45.6	46	8	1
AG40-28.5B	AG40-28.5S	M40×1.5	Φ40.3	24	28.5	15	41	50	55.4	53.5	9	1
AG40-33B	AG40-33S	M40×1.5	Φ40.3	28.5	33	15	41	50	55.4	53.5	9	1
AG50-37B	AG50-37S	M50×1.5	Φ50.4	33	37	16	45	60	65.5	66	9.6	1
AG50-42B	AG50-42S	M50×1.5	Φ50.4	37	42	16	45	60	65.5	66	9.6	1

AGP SERIES SEALING WASHER for AG • AGSP

- Sealing washer for AG series.
- Made from oil resistant NBR material.
- Use in the case of installation on a rough or uneven surfaces.
- Selectable in 7 sizes (from M12 to M50)
- Sealing washer is not necessary for installation on flat surfaces.

AGP Dimensions

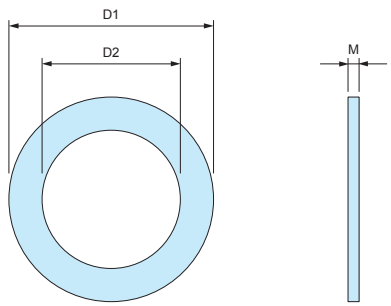

- Material : NBR

Product no. / Dimensions

Product no.	D1	D2	M	Suitable cable gland	Pack of
AGP-12	20	12	1.6	AG12	10
AGP-16	23.5	16.5	2.0	AG16	10
AGP-20	29	20	2.0	AG20	10
AGP-25	37	25	2.0	AG25	10
AGP-32	44	32	2.2	AG32	5
AGP-40	52	40	2.2	AG40	5
AGP-50	64	50	3.1	AG50	5

AGM series METAL CABLE GLAND

- High water protection IP68 (1bar / 30min) metal cable gland.
- Wide selection, for M6 ~ M50 and PG7 ~ PG16.
  Suitable for Φ2 mm ~ Φ42 mm cable.

Technical Data
Protection class: IP68 1bar / 30min Operating temperature: -40°C ~ +100°C Compliant with EN50262 Ver. A

AGM series

Thicker sealing insert evenly hold a cable by having a larger holding area. Remains durable even after repeated tightening / loosening.

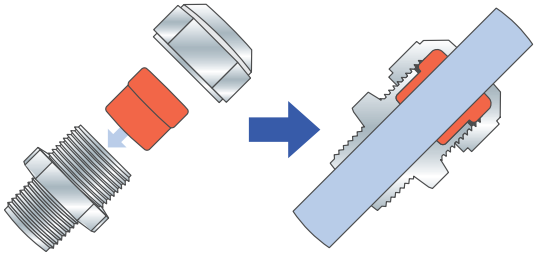

Lamellar insert type

If over-tightened, it can cause the rubber bush or cable to deform, which can allow water to seep in.

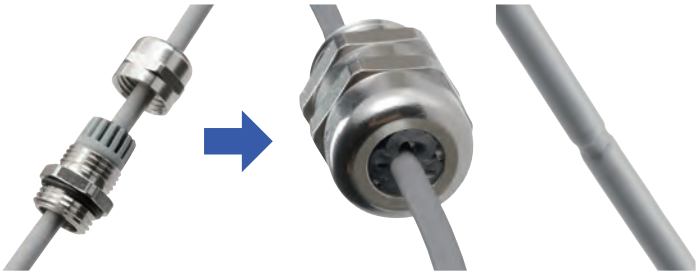

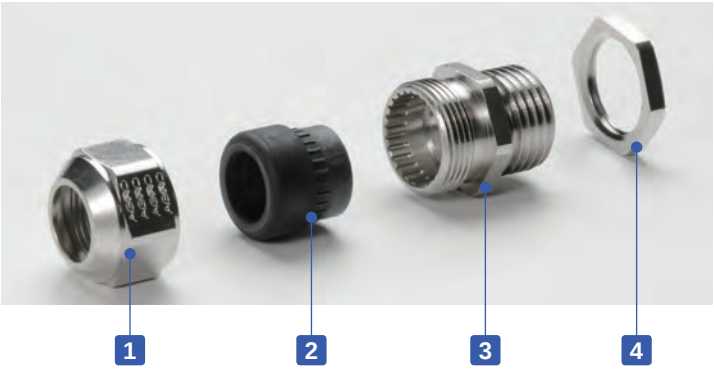

- Proper tightening torque varies by each cable diameter.
  Tighten the cap until top of the sealing insert forms a small bead between the cap and the cable.

Components

No.	Part name	Material	Color / Finish
1	Cap	Brass	Nickel plated
2	Sealing insert	TPE	Black
3	Connector	Brass	Nickel plated
-	O-ring	NBR	Black
4	Lock nut	Brass	Nickel plated

AGM dimensions

■ DXF/DWG/PDF drawings available on our website.

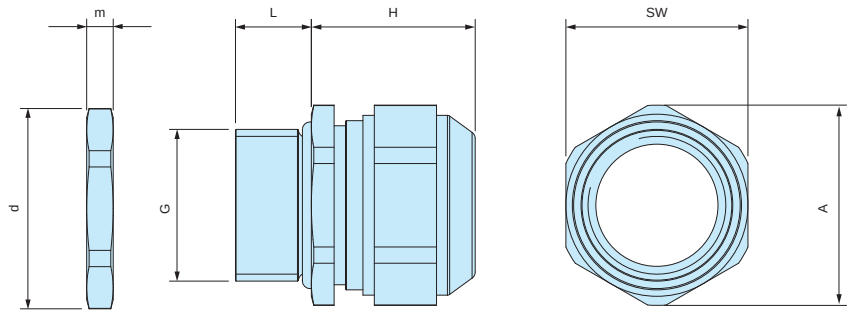

Product no. / Dimensions

Product no.	G			Cable range		L	H Max	SW	A	d	m	Pack of
	Thread size	Thread outer dia.	Mounting hole	Min	Max							
AGM6-2.5	M6×1.0	—	Φ6.2	2	2.5	8	12	8	9	10	2.8	1
AGM6-3	M6×1.0	—	Φ6.2	2.5	3.0	8	12	8	9	10	2.8	1
AGM6-3.5	M6×1.0	—	Φ6.2	3.0	3.5	8	12	8	9	10	2.8	1
AGM8-5	M8×1.25	—	Φ8.2	3.5	4.7	10	14	11	12	12	3	1
AGM10-6	M10×1.5	—	Φ10.2	4.0	6.0	10	15	13	14.3	14	2.8	1
AGM12-8	M12×1.5	—	Φ12.2	6.5	8.0	10	17	15	16.5	16.5	2.8	1
AGM16-10.5	M16×1.5	—	Φ16.2	8.0	10.5	10	21	18	20	21	3	1
AGM20-15	M20×1.5	—	Φ20.2	11.0	15.0	10	23	24	26.5	26.5	3.5	1
AGM25-20	M25×1.5	—	Φ25.2	16.0	20.0	11	28	30	33	33	4	1
AGM32-25.5	M32×1.5	—	Φ32.3	21.0	25.5	13	29.5	36	39.5	39.5	4	1
AGM40-28.5	M40×1.5	—	Φ40.3	24.0	28.5	13	32	46	50.7	51	5	1
AGM40-33	M40×1.5	—	Φ40.3	28.5	33.0	13	32	46	50.7	51	5	1
AGM50-37	M50×1.5	—	Φ50.4	33.0	37.0	14	34	55	59.7	60	5.5	1
AGM50-42	M50×1.5	—	Φ50.4	37.0	42.0	14	34	55	59.7	60	5.5	1

AGE SERIES EMC SHIELDED CABLE GLAND

- Optimal contact spring provides excellent shield contact and the smallest possible transfer impedance.
- Clawed lock nut makes a good EMC shield contact possible on conductive enclosures.
- Shape of the contact spring not only allows for a large clamping range to the shield but also enables easy and faster installation and re-installation.
- 2-piece detachable sealing inserts can be adapted to the wider existing cable diameter on site.
  (AGE12 available only with 1-piece sealing insert)

Technical Data

Protection class : IP68 2bar / 30min, IP69K
20m depth immersion in 30 minutes
Operating temperature : -60°C ~ +100°C
Compliant with IEC62444 Var. A

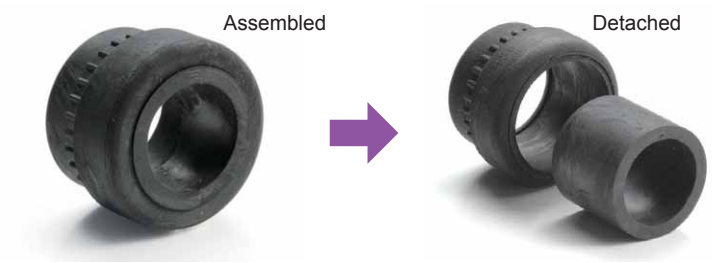

Cable Range

No.	Sealing insert type	
	Assembled	Detached
AGE16-10.5	Φ 6 ~ Φ 7.5	Φ 7.5 ~ Φ10.5
AGE20-15	Φ 8 ~ Φ10.5	Φ10.5 ~ Φ15
AGE25-20	Φ12.5 ~ Φ15	Φ15 ~ Φ20
AGE32-25	Φ17 ~ Φ20	Φ20 ~ Φ25

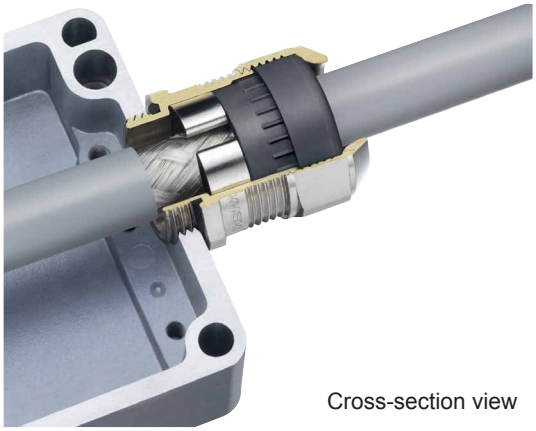

Cross-section view

Components

No.	Part name	Material	Color / Finish
1	Cap	Brass	Nickel plated
2	Sealing insert	TPE	Black
3	Connector	Brass	Nickel plated
4	Contact spring	Stainless steel	Unfinished
-	O-Ring	NBR	Black
5	Lock-nut	Brass	Nickel plated

INSTALLATION Instruction

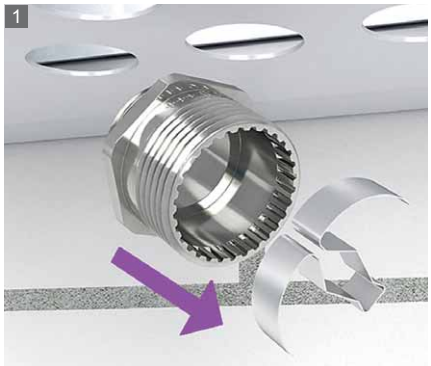

Remove the contact spring from the connector.

Install the connector onto the enclosure.

Strip the cable.

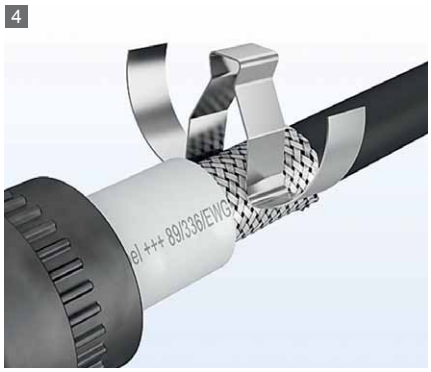

Clip the contact spring on the shielded cable.

Pass the cable through the Sealing insert and cap.

Tighten the cap to complete.

AGE dimensions

■ DXF/DWG/PDF drawings available on our website.

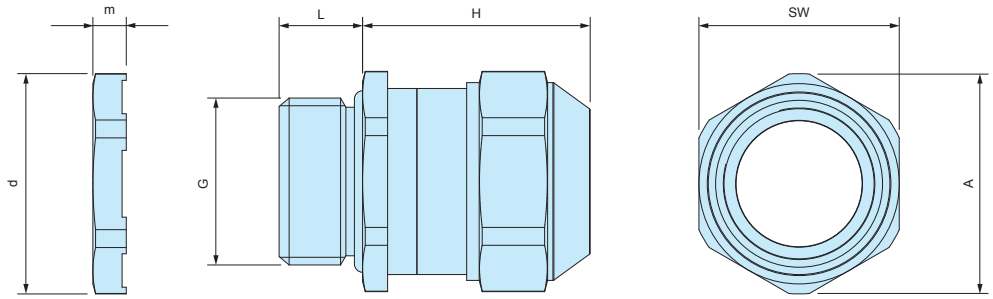

Product no. / Dimensions

Product no.	G		Cable range		L	H Max	SW	A	d	m	Pack of
	Thread size	Mounting hole	Min	Max							
AGE12-5	M12×1.5	Φ12.2	3.5	5.0	10	22	15	16.5	16.5	3.5	1
AGE12-6.5	M12×1.5	Φ12.2	5.0	6.5	10	22	15	16.5	16.5	3.5	1
AGE16-10.5	M16×1.5	Φ16.2	6.0	10.5	10	25	18	20	21	3.5	1
AGE20-15	M20×1.5	Φ20.2	8.0	15.0	10	27	24	26.5	26.5	4	1
AGE25-20	M25×1.5	Φ25.2	12.5	20.0	11	33	30	33	33	4	1
AGE32-25	M32×1.5	Φ32.3	17.0	25.0	13	34	36	39.5	39.5	5	1

AGH SERIES HEAT RESISTANT METAL CABLE GLAND

- Heat resistant sealing insert made of FPM material. Resistant up to 200°C
- IP68 1bar / 30min high performance waterproof cable gland.

Technical Data
Protection class : Protection class IP68 1bar / 30min 10m depth immersion in 30 minutes Operating temperature : -40°C ~ +200°C Compliant with EN50262 Var. A

AGH series

Thicker sealing insert evenly clasp onto the cable by having a larger area. Remains durable even after repeated tightening / loosening.

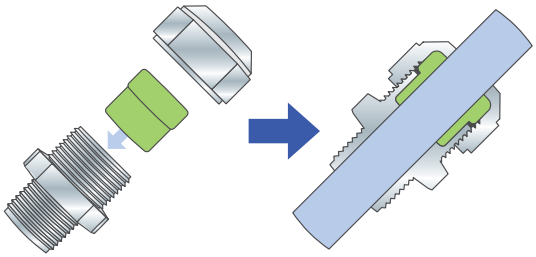

Conventional cable gland

If over-tightened, it can cause the rubber bush or cable to deform, which may allow water to seep in.

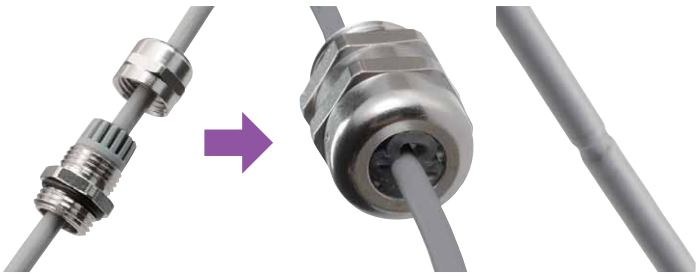

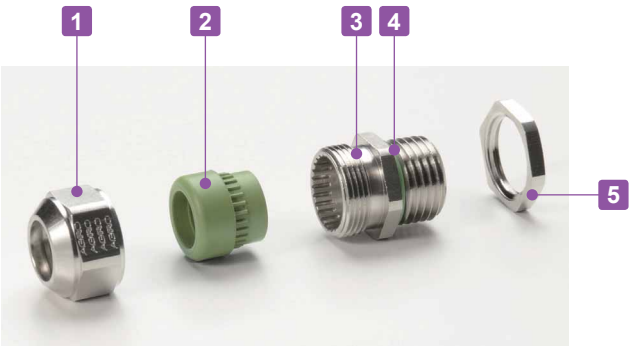

- Tightening torque varies depending on the cable diameter. Tighten until the sealing insert protrudes slightly from the cap.

Components

No.	Part name	Material	Color / Finish
1	Cap	Brass	Nickel plated
2	Sealing insert	FPM	Green
3	Connector	Brass	Nickel plated
4	O-Ring	FPM	Green
5	Lock-nut	Brass	Nickel plated

AGH dimensions

■ DXF/DWG/PDF drawings available on our website.

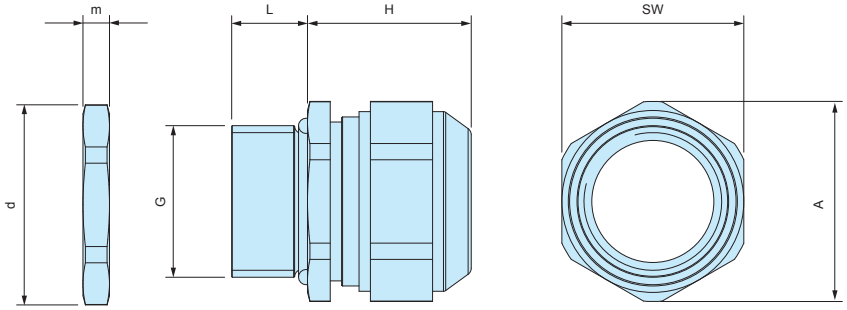

Product no. / Dimensions

Product no.	G		Cable range		L	H Max	SW	A	d	m	Pack of
	Thread size	Mounting hole	Min	Max							
AGH10-6	M10×1.5	Φ10.2	4.0	6.0	10	15	13	14.3	14.2	3	1
AGH12-8	M12×1.5	Φ12.2	6.5	8.0	10	17	15	16.5	16.5	3	1
AGH16-10.5	M16×1.5	Φ16.2	8.0	10.5	10	20	18	20	21	3	1
AGH20-15	M20×1.5	Φ20.2	11.0	15.0	10	23	24	26.5	26.3	3.5	1
AGH25-20	M25×1.5	Φ25.2	16.0	20.0	11	27	30	33	33	4	1
AGH32-25.5	M32×1.5	Φ32.3	21.0	25.5	13	28.5	36	39.7	39.7	4	1

SP SERIES SEALING PLUG

SP dimensions

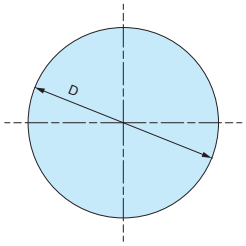

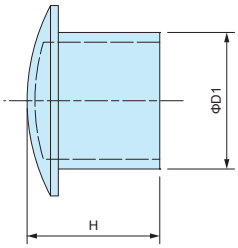

- Material : Nylon

- Sealing plug for cable glands when not in use.
- Maintain a waterproof seal when plugged into the sealing insert on cable glands.

Product no. / Dimensions

Product no.	D	D1	H	Suitable cable glands	Pack of
SP-12	10.2	6	15.5	RMW12, RM12, RMW16, RM16, RPG7, RPG9	10
SP-16	15.6	9.5	15.5	RMW20, RM20, RPG11, RPG13.5	10
SP-20	19.6	13.5	16.5	RPG16	10
SP-25	24.4	17.5	17	RMW25, RM25, RMW32, RM32, RPG21	5
SP-40	32.5	24.5	17.5	RMW40, RM40, RPG29	5
SP-50	47.2	38.9	17.6	RMW50, RM50	5

CP SERIES CORD PROTECTOR

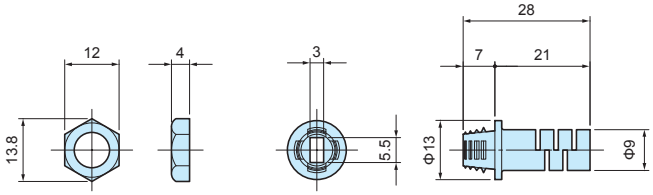

Installation hole layout

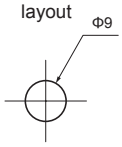

- Cord protector for protection against cord twists and breakage.
- Nut can be secured from the back side of the panel for additional stability.

Components

No.	Part name	Material
1	Connector	PVC
2	Nut	Polyethylene

Product no. / Feature

Product no.		Panel thickness	Cord diameter	Pack of
● Black	● Light Gray			
CP-Y85B	CP-Y85G	1.5 ~ 2.0	VFF0.75×2	10

CP SERIES CORD PROTECTOR

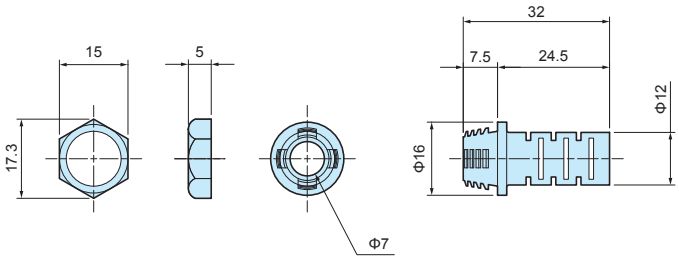

Installation hole layout

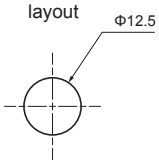

- Cord protector for protection against cord twists and breakage.
- Nut can be secured from the back side of the panel for additional stability.

Components

No.	Part name	Material
1	Connector	PVC
2	Nut	Polyethylene

Product no. / Feature

Product no.		Panel thickness	Cord diameter	Cord shape	Pack of
● Black	● Light Gray				
CP-127B	CP-127G	1.5 ~ 2.0	Φ5.8 ~ Φ6.8	Round cord	10

TL series TILT LEG

TL dimensions

■ DXF/DWG/PDF drawings available on our website.

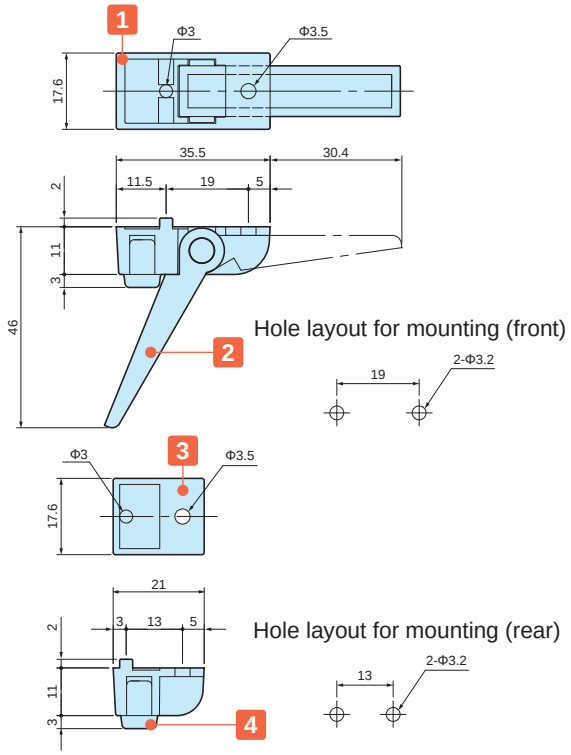

Components

＊Maximum load = 7 kg

No.	Part name	Pcs	Material	Color / Finish
1	Front feet	2	ABS UL94HB	Black • Gray • Light gray
2	Leg	2	ABS UL94HB	Black • Gray • Light gray
3	Rear feet	2	ABS UL94HB	Black • Gray • Light gray
4	Rubber feet	4	EPDM	Gray • Black
–	Screw	4	Steel	Black trivalent chromate

■ Included screws: M3-8 and M3 nut (with washer) set.

Product no. / Dimensions

Product no.	Color (body)	Color (rubber feet)	Sales unit
● TL-45BB	Black	Black	1 set
● TL-45GG	Gray	Gray	1 set
● TL-45SG	Light gray	Gray	1 set

■ EPDM (black) may have its color migrate onto the placement surface.

MS SERIES INSTALLATION AREA

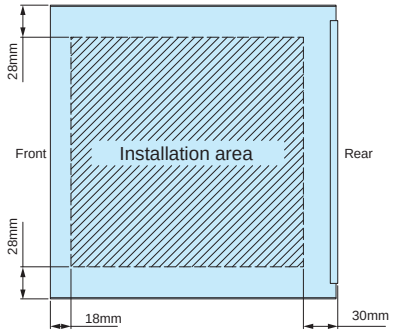

CBF-1G CABLE HOOK

APPLICATION EXAMPLE

■ Used for wrapping and securing cords and wires.
■ Can be used with a variety of different enclosure series and models.
■ Requires a panel thickness of between 1.0 ~ 3.0mm.

Product no. / Dimensions

Product no.	Material	Color	Pack of
CBF-1G	ABS UL94HB	Gray	4

■ Included screws: M3-8 trivalent chromate (with washer) x 4 pcs

CBF dimensions

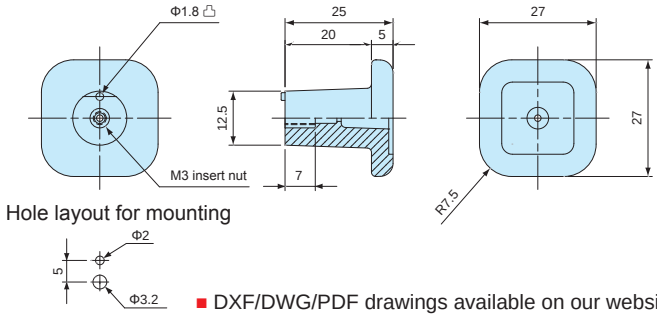

■ DXF/DWG/PDF drawings available on our website.

SG SERIES RUBBER MEMBRANE GROMET

■ DXF/DWG/PDF drawings available on our website.

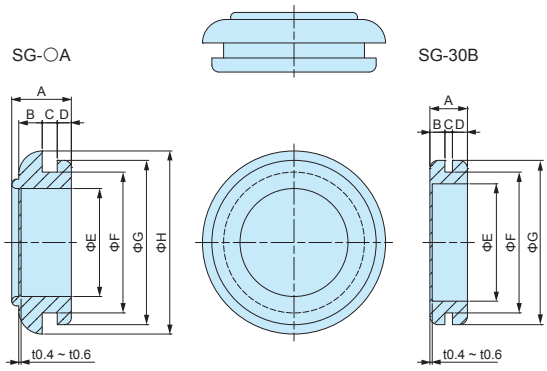

Technical Data
Operating temperature: -30°C ~ +100°C

Components

Material	Hardness	Color
EPDM	55°±5°	Black

■ Membrane thickness = 0.4 ~ 0.6mm

Product no. / Dimensions

Product no.	A	B	C	D	E	F	G	H	Pack of
SG- 9A	8.5	3.5	2.3	2	4.5	9	13	16	10
SG-12A	6.3	2.5	1.6	1.5	7	12	16	19	10
SG-14A	8	2.7	2.3	2	9	14	18	21	10
SG-16A	8.1	3.5	1.6	2	11	16	20	23	10
SG-18A	8.8	3.5	2.3	2	13	18	22	25	10
SG-20A	9.1	4	1.6	2.5	15	20	24	27	10
SG-22A	9.8	4	2.3	2.5	17	22	26	29	10
SG-24A	11.3	5	2.3	3	19	24	28	31	10
SG-26A	12.2	5	3.2	3	19	26	31	35	10
SG-28A	11.8	5	2.3	3	21	28	33	37	10
SG-30A	12.7	5	3.2	3	23	30	35	39	10
SG-30B	8	3.2	1.6	3.2	25	30	35	—	10
SG-32A	11.8	5	2.3	3	25	32	37	41	10
SG-34A	12.7	5	3.2	3	27	34	39	43	10
SG-36A	13.8	6	2.3	4	28	36	42	45	10
SG-38A	14.7	6	3.2	4	30	38	44	48	10
SG-42A	14.7	6	3.2	4	34	42	48	52	10

NG SERIES RUBBER GROMET

■ DXF/DWG/PDF drawings available on our website.

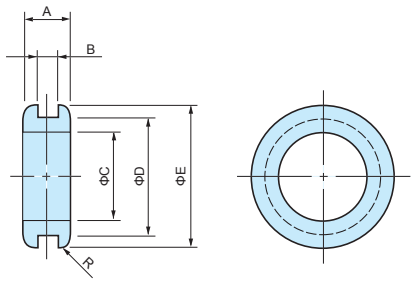

Technical Data
Operating temperature: -30°C ~ +100°C

Components

Material	Hardness	Color
EPDM	50° ~ 55°	Black

Product no. / Dimensions

Product no.	A	B	C	D	E	R	Pack of
NG-79-1	3.7	1.2	3.5	6	9	0.6	10
NG-79-A1	4	1	5	8	11	0.6	10
NG-79-A	4.5	1.5	5	8	11	0.6	10
NG-79-A2	5	2	5	8	11	0.6	10
NG-79-B	6	3	5	8	11	0.6	10
NG-79-C	4.5	1.5	7	10	13	0.6	10
NG-79-D	6	3	7	10	13	0.6	10
NG-79-E	4.5	1.5	9	12	15	0.6	10
NG-79-F	6	3	9	12	15	0.6	10
NG-79-G	5.5	1.5	11	15	19	1	10
NG-79-H	7	3	11	15	19	1	10
NG-79-J	5.5	1.5	13	17	21	1	10
NG-79-K	7	3	13	17	21	1	10
NG-79-L	5.5	1.5	15	19	23	1	10
NG-79-M	7	3	15	19	23	1	10
NG-79-N	6.5	1.5	20	25	30	1.2	10
NG-79-O	8	3	20	25	30	1.2	10
NG-79-P	6.5	1.5	25	30	35	1.2	10
NG-79-Q	8	3	25	30	35	1.2	10
NG-79-R	7.5	1.5	30	36	42	1.2	10
NG-79-S	9	3	30	36	42	1.2	10
NG-74	4	1	3	5	7	1	10
NG-742	5	2	3	5	7	1	10

MHD SERIES SMALL HOLE PLUG

■ DXF/DWG/PDF drawings available on our website.

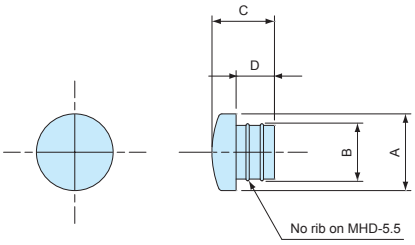

- Small hole plug for Φ5.0, Φ5.5, Φ7.0, and Φ8.0 sized holes.
- Made from TPE (Elastomer) and silicone material.
- Applicable panel installation thickness between 1.0mm ~ 3.0mm.

Product no. / Dimensions

Product no.	Material	Color	Mounting hole	A	B	C	D	Pack of
MHD-5	TPE	Black	Φ5	7	5.2	5.7	3.5	10
MHD-5.5	Silicone	Black	Φ5.5	7	5.6	5	3	10
MHD-7	TPE	Black	Φ7	9	7.2	5.7	3.5	10
MHD-8	TPE	Black	Φ8	10	8.2	5.7	3.5	10

HPL SERIES HOLE PLUG

- Hole plug for the unused holes.

■ DXF/DWG/PDF drawings available on our website.

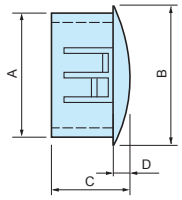

Product no. / Dimensions

■ Material / Color : PA66 UL94V-2 / Black

Product no.	A	B	C	D	Mounting hole	Panel thickness	Pack of
HPL- 8	7.6	10.4	8.1	1.6	Φ8	1.5/1.6	10
HPL-10	9.5	13	10.5	1.6	Φ9.5	1.0/2.0/2.5	10
HPL-13	12.5	16.7	10.9	1.6	Φ12.5	1.0/1.5/2.0/3.0	10
HPL-16	15.8	19.8	10	1.1	Φ16	1.0/1.2/3.0	10
HPL-19	18.9	23.2	10	1.4	Φ19	1.0/1.2	10
HPL-22	22	26	11.3	1.6	Φ22	1.0/1.2/2.0	10
HPL-25	25.4	29.1	12.3	2.4	Φ25.5	1.0/1.2/2.0	10
HPL-30	30	35	12	1.6	Φ30	1.0/1.2/2.0	10

■ Confirm first for usability on panel thickness not listed in the above chart.

JKG SERIES HOLE EDGE PROTECTOR

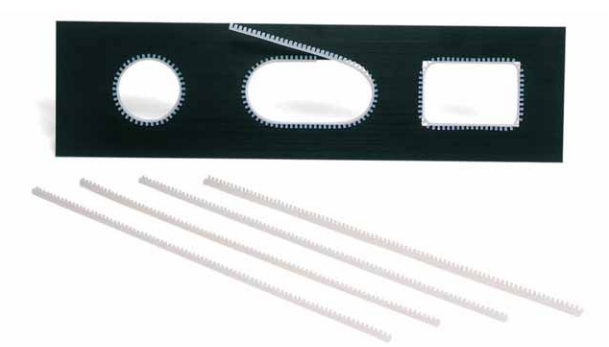

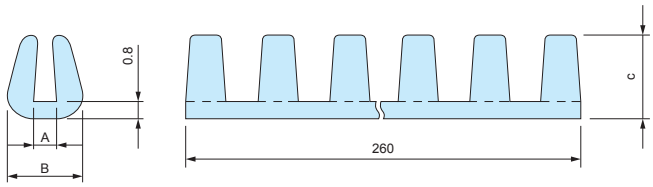

- Install protector on the cut edge of the hole on the panel to protect cables and components from damage.
- Cut into suitable lengths to fit the hole.

Product no. / Dimensions

■ Material / Color : PA66 UL94V-2 / Natural

Product no.	A	B	C	Panel thickness	Pack of
JKG006N	0.6	3.1	3.8	0.5 ~ 0.7	10
JKG008N	0.8	3.1	3.8	0.7 ~ 0.9	10
JKG010N	1	3.3	3.8	0.9 ~ 1.1	10
JKG012N	1.2	3.5	3.8	1.1 ~ 1.3	10
JKG014N	1.4	3.7	3.8	1.3 ~ 1.5	10
JKG016N	1.6	3.9	3.8	1.4 ~ 1.7	10
JKG020N	2	4.3	3.8	1.8 ~ 2.0	10
JKG030N	3	6.2	4.8	2.5 ~ 3.0	10

CJCV series USB DUST COVER FLAP

- USB TYPE-A connector dust cover plug with stopper cord.
- Hole milling is required for flap installation.

How to Install

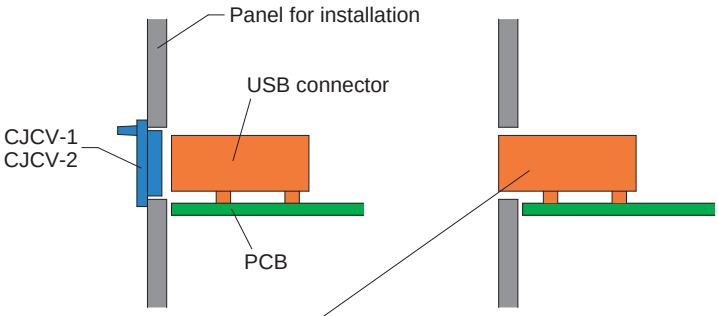

Incorrect Position

- The USB connector should be mounted such that it does not protrude out from the panel's inner side.

Hole layout for installing

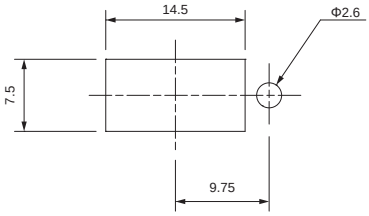

Product no. / Feature

- DXF/DWG/PDF drawings available on our website.

Product no.	Material	Color	Panel thickness	Pack of
CJCV-1	TPU	Black	0.5 ~ 2.0mm	10
CJCV-2	TPU	Black	2.0 ~ 12.0mm	10

USBC series USB DUSTPROOF BLIND PLUG

NEW

USB TYPE-A

USBC-2 (Pull-tab type)

USBC-8 (No pull-tab type)

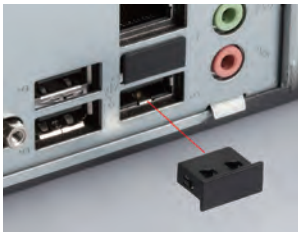

- Easy insertion plug for USB type-A connector.

Product no. / Feature

- DXF/DWG/PDF drawings available on our website.

Product no.	Material	Color	Pack of
USBC-2	ABS UL94HB	Black	10
USBC-8	PA66 UL94V-2	Black	10

USB TYPE-B

USBC-1 (Pull-tab type)

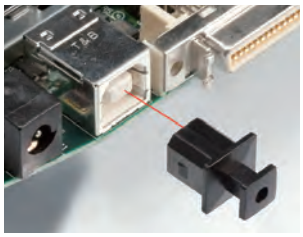

USBC-3 (No pull-tab type)

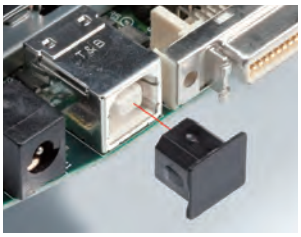

Product no. / Feature

- DXF/DWG/PDF drawings available on our website.

Product no.	Material	Color	Pack of
USBC-1	ABS UL94HB	Black	10
USBC-3	PP UL94HB	Black	10

USB TYPE-C

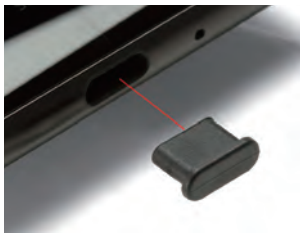

USB Type-C connector

Product no. / Feature

- DXF/DWG/PDF drawings available on our website.

Product no.	Material	Color	Pack of
NEW USBC-3C	PE	Black	10

USB 3.0 Micro B

USB 3.0 Micro B connector

Product no. / Feature

■ DXF/DWG/PDF drawings available on our website.

Product no.	Material	Color	Pack of
NEW USBC-21	TPE	Black	10

MICRO USB

USBC-31

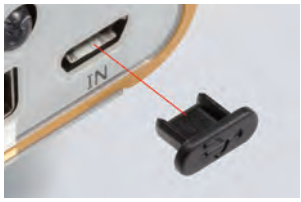

MINI USB

USBC-10

Product no. / Feature

■ DXF/DWG/PDF drawings available on our website.

Product no.	Material	Color	Pack of
USBC-31	PE	Black	10
USBC-10	TPE	Black	10

KPS•USB3C series USB DUSTPROOF CONNECTOR COVER NEW

USB TYPE-A

Product no. / Feature

Product no.	Material	Color	Pack of
KPS-6	PE	Natural	10

USB TYPE-C

Product no. / Feature

Product no.	Material	Color	Pack of
NEW USB3C-3	PE	Natural	10

MICRO USB

Product no. / Feature

Product no.	Material	Color	Pack of
KPS-21	PE	Natural	10

■ DXF/DWG/PDF drawings available on our website.

DTC series D-SUB • DVI DUSTPROOF CONNECTOR COVER

DTC dimensions

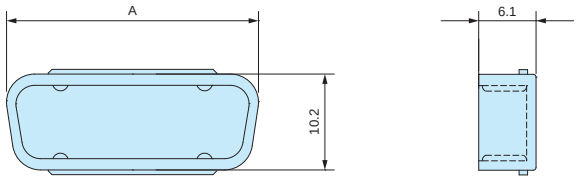

■ DXF/DWG/PDF drawings available on our website.

Product no. / Dimensions / Feature

Product no.	Matching connector	A	Material	Color	Pack of
DTC- 9F	D-sub 9 pin	18.5	PP UL94HB	Gray	10
DTC-15F	D-sub 15 pin • DVI	26.8	PP UL94HB	Gray	10
DTC-25F	D-sub 25 pin	40.6	PP UL94HB	Gray	10

PLC-3TV POWER INLET DUSTPROOF BLIND PLUG

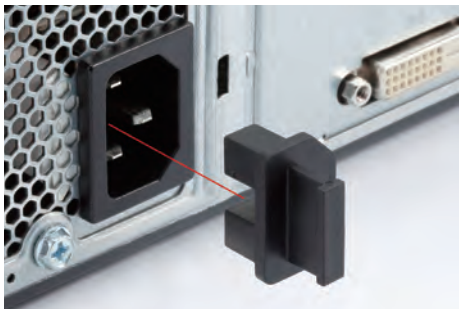

PLC-3TV dimensions

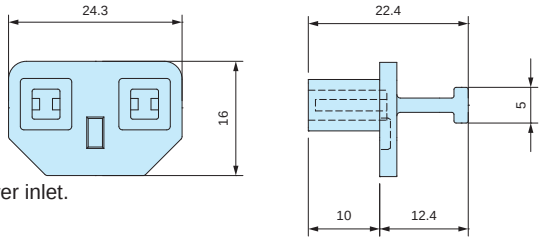

■ Pull-tab type blind plug for power inlet.

Product no. / Feature

■ DXF/DWG/PDF drawings available on our website.

Product no.	Material	Color	Pack of
PLC-3TV	TPE UL94V-0	Black	5

PJR-45 • PJS-45 RJ45 DUSTPROOF BLIND PLUG

PJR-45 (Pull-tab type)

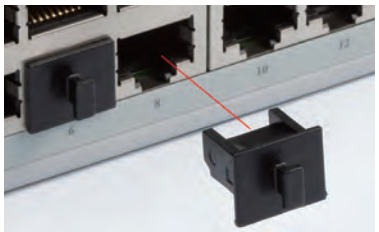

PJS-45 (No pull-tab type)

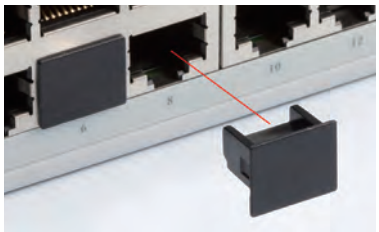

Product no. / Feature

Product no.	Material	Color	Pack of
PJR-45	PE	Black	10
PJS-45	ABS UL94HB	Black	10

■ DXF/DWG/PDF drawings available on our website.

PJCV-1 RJ45 DUSTPROOF CONNECTOR COVER

Product no. / Feature

■ DXF/DWG/PDF drawings available on our website.

Product no.	Material	Color	Pack of
PJCV-1	PE	Natural	10

SFPC • CXP series FIBER OPTIC PORT DUSTPROOF PLUG

NEW

■ Dustproof pull-tab cover plug for fiber optic connector port.

For SFP port

SFPC-11

For QSFP port

SFPC-12

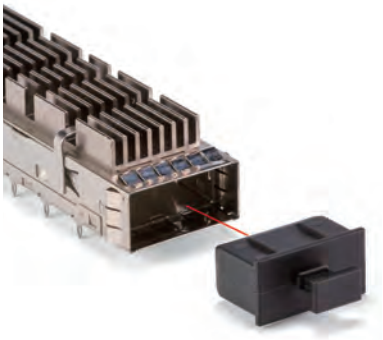

For CXP port

CXP-2

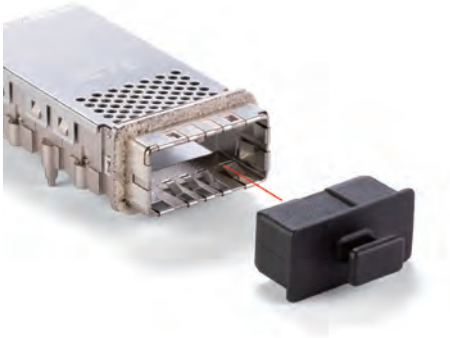

Product no. / Feature

Product no.	Material	Color	Pack of
NEW SFPC-11	PE	Black	10
NEW SFPC-12	PE	Black	10
NEW CXP-2	PE	Black	10

■ DXF/DWG/PDF drawings available on our website.

HDMIC series HDMI DUSTPROOF BLIND PLUG

HDMIC-1 (Pull-tab type)

HDMIC-3 (No pull-tab type)

Product no. / Feature

Product no.	Material	Color	Pack of
HDMIC-1	PE	Black	10
HDMIC-3	ABS UL94HB	Black	10

■ DXF/DWG/PDF drawings available on our website.

HDMIT-1 HDMI DUSTPROOF CONNECTOR COVER

Product no. / Feature

Product no.	Material	Color	Pack of
HDMIT-1	PE	Natural	10

■ DXF/DWG/PDF drawings available on our website.