PFE series EMC SHIELDED PLASTIC BOX

EMC Shielding Effects

- PFE series is an EMC shielded version of the PF series network plastic box coated internally with DOTITE conductive paint (acrylic paint mixed with nickel filler).
- Flat designed plastic case with detachable panels.
- Made of flame-resistant ABS UL94V-0.
- Equipped with built-in bosses for PCB mounting.
- Suitable for Wi-Fi access point, measuring equipment, controller or various other applications for desktop, wall mounting use and so on.

Technical Data
Protection class: IP40 Operating temperature: -10°C ~ +60°C

Components

No.	Part name	Pcs	Material	Color / Finish	Conductive paint
1	Top cover	1	ABS UL94V-0	Off-white	DOTITE
2	Bottom base	1	ABS UL94V-0	Off-white	DOTITE
3	Panel	2	ABS UL94V-0	Off-white	DOTITE
4	Self-tapping screw	4	Steel	Nickel plated	–
5	Rubber feet	4	Elastomer	Dark gray	–

Accessories (Optional parts)

Tapping standoff TPS series
See page 122

PCB mounting screw EM series
See page 123

TORX screw MR series
See page 123

Suspension bracket WM series
See page 116

Embedded battery box BC series
See page 125 ~ 128

PFE dimensions

■ DXF/DWG/PDF/STP drawings available on our website.

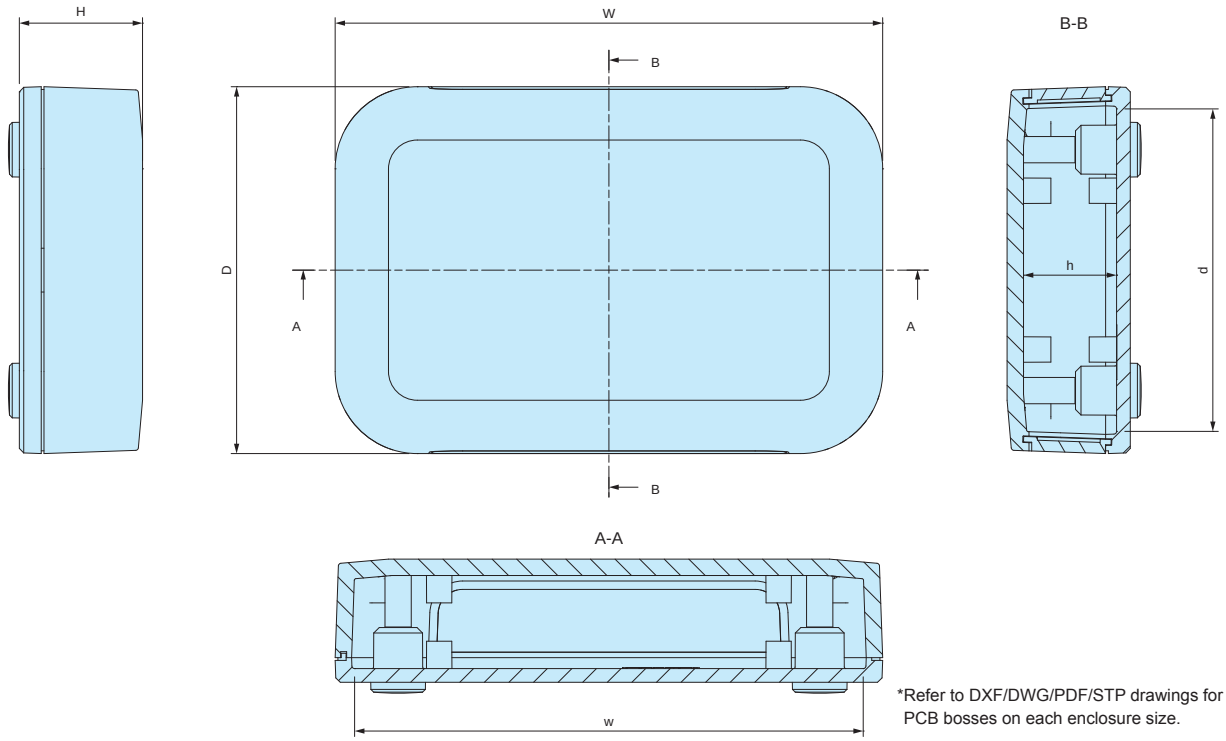

*Refer to DXF/DWG/PDF/STP drawings for number of PCB bosses on each enclosure size.

Product no. / Dimensions

*H dimension does not include the height of rubber feet. (Rubber feet height = +2mm)

Product no.	External dimensions			Internal dimensions			Screw	Weight (g)
	W	H	D	w	h	d		
PFE13-4- 9W	125	40	85	116	75	34.5	M2.5-8 x 4 pcs	114
PFE15-3-10W	150	30	100	142	90	24	M2.5-8 x 4 pcs	152
PFE15-5-15W	150	45	150	141	139	39	M2.5-8 x 4 pcs	244.5
PFE20-4-13W	200	40	135	191.5	124.5	34	M3-8 x 4 pcs	274.5

Accessories (Optional parts)

PFRF series RUBBER FEET for PF • PFE

- Rubber feet for PF • PFE series.
- Inserted into the screw holes on the underside of box.
- Elastomer material is resistant against color migration.
- PF • PFE boxes comes with PFRF rubber feet. Utilize PFRF as spare or replacement.

PFRF dimensions

■ STP drawings available on our website.

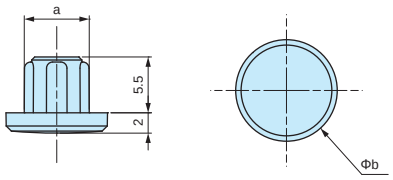

Product no. / Dimensions

Product no.	Dimensions		Suitable models	Material	Color	Pack of
	a	b				
PFRF-M2.5D	6.4	10	PF10-2-7,10-2-10,10-2-15,10-4-7,10-4-10,10-4-15 PF10-6-15,13-3-9,13-3-13,13-3-19,13-4-9,13-4-13 PF13-4-19,13-6-19,15-3-10,15-3-15,15-5-10,15-5-15 PF18-4-12,18-4-18,18-5-12,18-5-18 PFE13-4-9,15-3-10,15-5-15	Elastomer	Dark gray	4
PFRF-M3D	7.2	11	PF20-4-13,20-4-20,20-6-13,20-6-20,24-4-17 PF24-4-24,24-6-17,24-6-24,28-5-20,28-7-20 PF28-9-20,32-5-23,32-7-23,32-10-23 PFE20-4-13	Elastomer	Dark gray	4

LCE series EMC SHIELDED HAND-HELD PLASTIC CASE

EMC Shielding Effects

Technical Data
Protection class: IP40 Operating temperature: -10°C ~ +60°C

- LCE series is an EMC shielded version of LC hand-held plastic case coated internally with DOTITE conductive paint (acrylic paint mixed with nickel filler).
- Designed with beveled edges and rounded corners, and manufactured from flame-resistant ABS UL94V-0 material.
- Recommended to be used as measurement instruments, testing devices, wireless communication gadgets, medical equipment, and so on.

Components

No.	Part name	Pcs	Material	Color / Finish	Conductive paint
1	Top cover	1	ABS UL94V-0	Dark gray	DOTITE
2	Bottom cover	1	ABS UL94V-0	Dark gray	DOTITE
3	Panel	1	ABS UL94V-0	Dark gray	DOTITE
4	Self-tapping screw	4	Steel M2.6	Black trivalent chromate	–

Accessories (Optional parts)

Silicone cover LCTP • LCSC series
See page 79 ~ 80

Tapping standoff TPS series
See page 122

PCB mounting screw EM-2.3
See page 123

TORX screw MR series
See page 123

Suspension bracket WM series
See page 116

LCE dimensions

■ DXF/DWG/PDF/STP drawings available on our website.

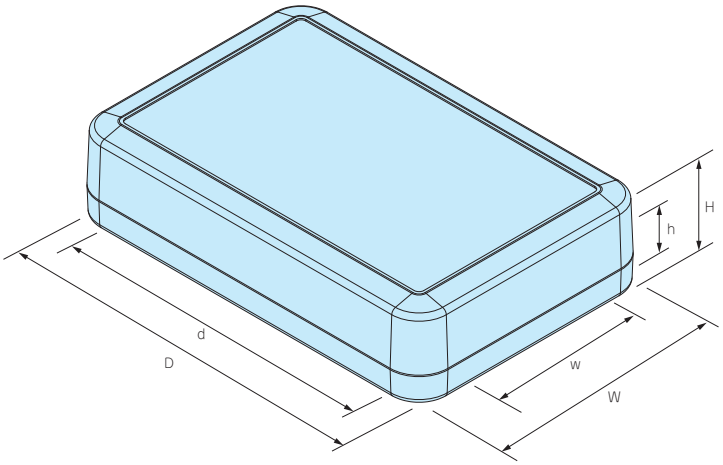

Product no. / Dimensions

Product no.	External dimensions			Internal dimensions			Screw	Weight (g)
	W	H	D	w	h	d		
LCE115 -N -D	69	19.5	115	61.5	9.5	86.5	M2.6-18 flat head x 4 pcs	72.5
LCE115H -N -D	69	28	115	60.9	18	86.5	M2.6-18 flat head x 4 pcs	84
LCE135 -N -D	76	27	135	68.2	16	107	M2.6-18 flat head x 4 pcs	97
LCE145H -N -D	96	35	145	87.2	24.5	112.9	M2.6-18 flat head x 4 pcs	137
LCE165H -N -D	80	35	165	71.7	24	137	M2.6-18 flat head x 4 pcs	139

CONDUCTIVE PAINT CUSTOMIZATION AVAILABLE for LC series.

The LCE series are a selected few models of the LC series, customized with conductive paint.
Other LC series enclosures not listed can also be customized with conductive paint.

Contact us for more details.
E-mail : sales@takachi-el.co.jp

LCTP series SHOCKPROOF SILICONE COVER for LC • LCE

Color Type

Code	O Orange	G Green	N Navy	D Dark gray
Color				

- Shock-proof silicone cover for LC and LCE series.
- Custom color is available from just 1 pc. For 500 pcs or more, manufacture costs will be similar to a standard color. Please inquire for more details. For custom color order, please specify **PANTONE**® color code.

LCTP dimensions

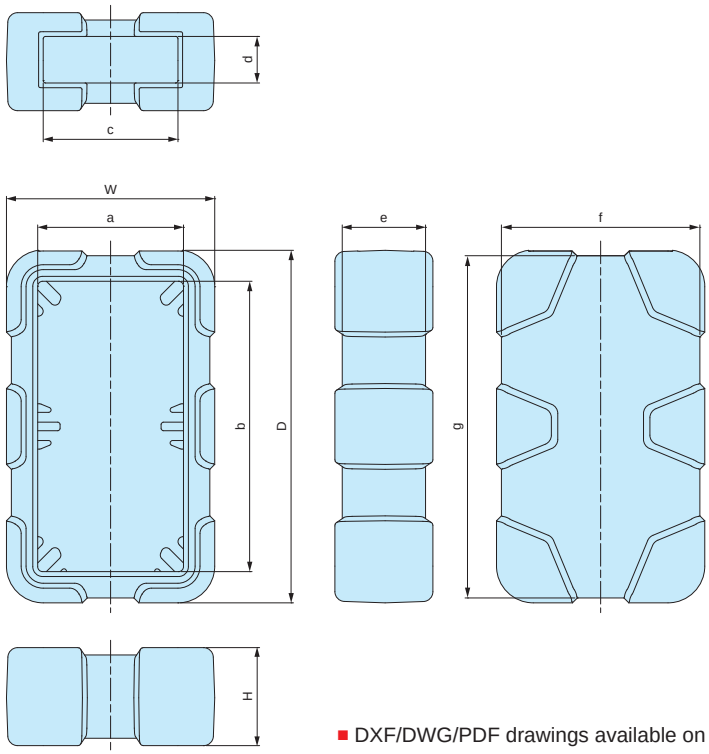

APPLICATION EXAMPLE

Ultrasonic Hardness Tester
Product by NOVOTEST (Ukraine)

- DXF/DWG/PDF drawings available on our website.

Components

Part name	Material	Color
Silicone cover	Silicone	Orange • Green • Navy • Dark gray

Product no. / Dimensions

- Please suffix color code at the end of the product number.

Product no.	W	H	D	a	b	c	d	e	f	g	Suitable models	Weight (g)
LCTP115 -□	76	28	121.9	55.5	101.5	48.3	12	24	72	117.8	LC • LCE115	53.5
LCTP115H -□	76	36.5	121.9	55.5	101.5	48.3	20.5	32.5	72	117.8	LC • LCE115H	61
LCTP135 -□	85	40	143.9	59.5	118.5	55	19	34	81	139.7	LC • LCE135	115.5
LCTP135H -□	85	48	143.9	59.5	118.5	55	27	42	81	139.6	LC135H	124
LCTP145 -□	105	40	153.9	76.5	125.5	71	19	34	101	149.7	LC145	137.5
LCTP145H -□	105	48	153.9	76.5	125.5	71	27	42	101	149.7	LC • LCE145H	147
LCTP165 -□	89	40	173.9	63.5	148.5	59	19	34	85	169.7	LC165	143
LCTP165H -□	89	48	173.9	63.5	148.5	59	27	42	85	169.6	LC • LCE165H	151.5

LCSC series SILICONE COVER for LC • LCE

Color Type

Code	R Red	G Green	B Blue	D Dark gray	L Light gray
Color					

- Silicone cover for LC and LCE series.
- Custom color is available from just 1 pc. For 500pcs or more, manufacture costs will be similar to a standard color. Please inquire for more details. For custom color order, please specify **PANTONE**® color code.

LCSC dimensions

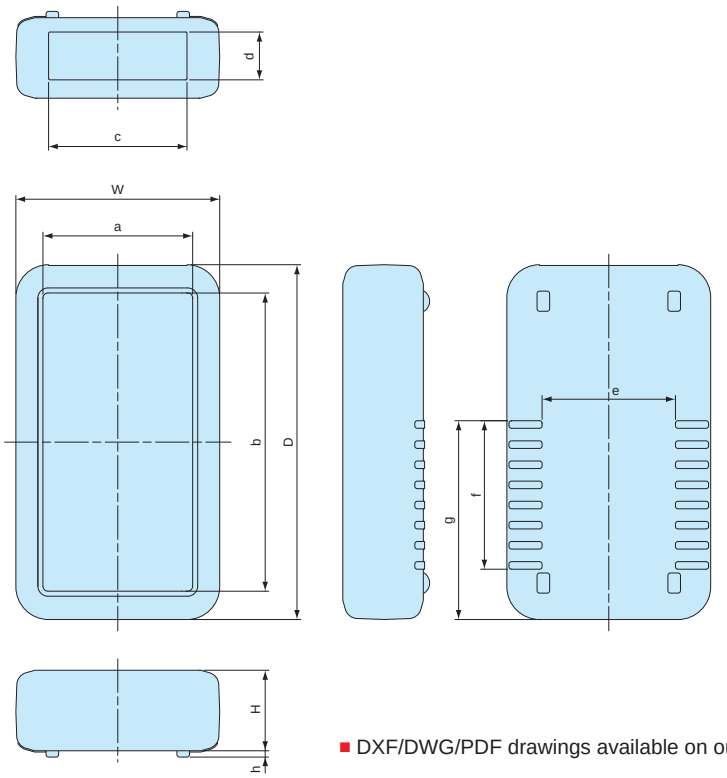

APPLICATION EXAMPLE

Temperature Surveillance Sensor

Product by SENFIO (Brazil)

- DXF/DWG/PDF drawings available on our website.

Components

Part name	Material	Color
Silicone cover	Silicone	Red • Green • Blue • Light gray • Dark gray

Product no. / Dimensions

- Please suffix color code at the end of the product number.

Product no.	W	H	D	a	b	c	d	e	f	g	h	Suitable models	Weight (g)
LCSC115 -☐	74	24	120	55.5	101.5	48.3	12	46	44.5	60.5	2	LC • LCE115	43
LCSC115H-☐	74	32.5	120	55.5	101.5	48.3	20.5	46	44.5	60.5	2	LC • LCE115H	50
LCSC135 -☐	81	32	141	59.5	118.5	55	19	53	59	79	2.5	LC • LCE135	70
LCSC135H-☐	81	40	141	59.5	118.5	55	27	53	59	79	2.5	LC135H	75.5
LCSC145 -☐	101	32	151	76.5	125.5	71	19	71	59	81	2.5	LC145	81
LCSC145H-☐	101	40	151	76.5	125.5	71	27	71	59	81	2.5	LC • LCE145H	89
LCSC165 -☐	85	32	171	63.5	148.5	59	19	53	67	92	2.5	LC165	82.5
LCSC165H-☐	85	40	171	63.5	148.5	59	27	53	67	92	2.5	LC • LCE165H	86

WM series SUSPENSION BRACKET

How to install

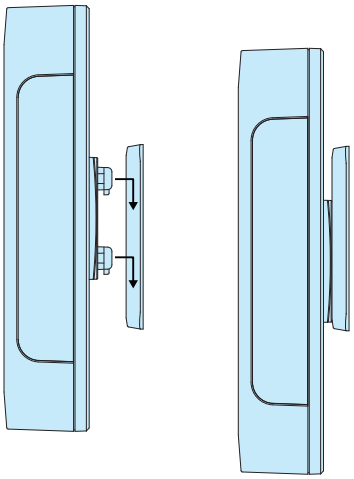

- Plastic wall mounting bracket. Easy attachment and removal.
- Large and small bracket types are available.
- Applicable to be used on plastic or metallic enclosures with a panel thickness of 0.8 ~ 3.5mm.
- To attach the suspension hook onto the enclosure, hole milling is required.
- Please be aware of the insertion direction of the suspension hook against the mounting base when attaching.

Technical Data
Max load : 2 kg - WM-1 5 kg - WM-2

*The max load values listed are static load values only. Use caution when handling.

WM dimensions

WM-1

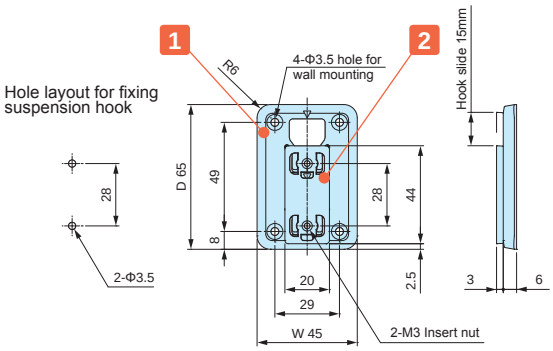

WM-2

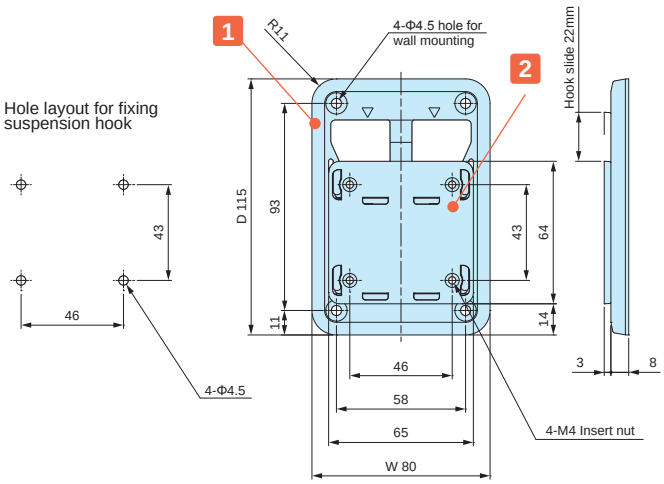

- DXF/DWG/PDF/STP drawings available on our website.

Components

No.	Part name	Pcs	Material	Color / Finish
1	Mounting base	1	PC + ABS UL94HB	Off-white • Dark gray
2	Suspension hook	1	PC + ABS UL94HB	Off-white • Dark gray
–	Screw	2 (WM-1) 4 (WM-2)	Steel	Nickel plated

Included Screw WM-1□ : Bind M3-8
WM-2□ : Bind M4-8

Product no. / Dimensions

Product no.		W	D	Mountable thickness	Weight (g)
● Off-white	● Dark gray				
WM-1W	WM-1D	45	65	t0.8 ~ t3.5	11.5
WM-2W	WM-2D	80	115	t0.8 ~ t3.5	48

NMG series NEODYMIUM MAGNET

Round magnet

■ DXF/DWG/PDF drawings available on our website.

■ Material / Finish: Neodymium / Nickel plated

■ Please attach using a strong adhesive.

NMG dimensions

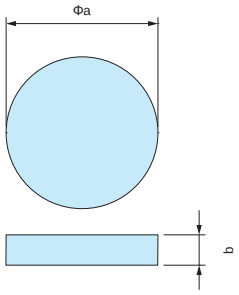

Components

Product no.	a	b	Weight (g)	Flux Density	Absorption
NMG3-15N	15	3	4	214.4 mT	2.44 kgf
NMG3-20N	20	3	7.1	170.7 mT	3.26 kgf
NMG5-22N	22	5	11.4	247.2 mT	5.91 kgf
NMG5-25N	25	5	18.4	221.9 mT	6.89 kgf

Round magnet with countersunk hole

■ Please fasten with a screw.

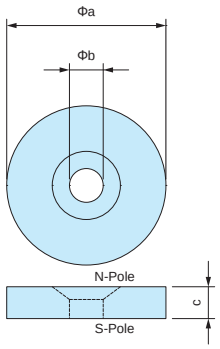

Components

Product no.	a	b	c	Countersunk size	Weight (g)	Flux Density	Absorption
NMG3-15M3	15	3.2	3	M3	3.8	214.3 mT	2.33 kgf
NMG3-20M3	20	3.2	3	M3	6.9	170.6 mT	3.17 kgf
NMG5-22M4	22	4.3	5	M4	13.7	247.2 mT	5.68 kgf
NMG5-25M5	25	5.3	5	M5	17.6	221.9 mT	6.58 kgf

Rectangular magnet with countersunk holes

■ Please fasten with a screw.

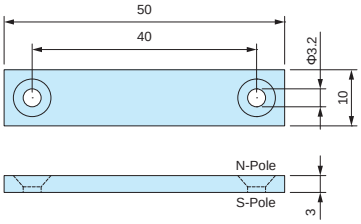

Components

Product no.	a	b	c	Countersunk size	Weight (g)	Flux Density	Absorption
NMG3-50M3	50	10	3	M3	11.3	210.0 mT	9.1 kgf

Example 1 The magnetic force remains strong even through plastic.

Make recessed pocket on the inside wall.

Glue on.

Attach onto a metallic surface.

Example 2

Make holes

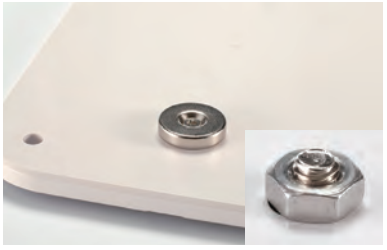

Fasten with a screw and nut.

Attach onto a metallic surface.

CAUTION: Handle with care to avoid personal injury or damage to the magnet.

GDH series PLASTIC BELT CLIP

GDH dimensions

■ DXF/DWG/PDF drawings available on our website.

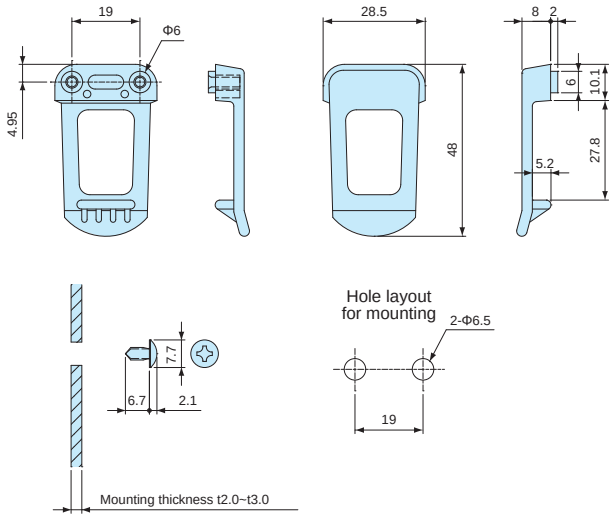

Components

No.	Part name	Pcs	Material	Color / Finish
1	Clip	1	ABS UL94HB	White • Black
2	Screw	2	Steel M3.5-6	Zinc plated

Product no. / Dimensions

Product no.		W	H	D
● White	● Black			
GDH-1W	GDH-1B	28.5	10	48

DK series STEEL BELT CLIP

DK dimensions

■ DXF/DWG/PDF drawings available on our website.

DK-1

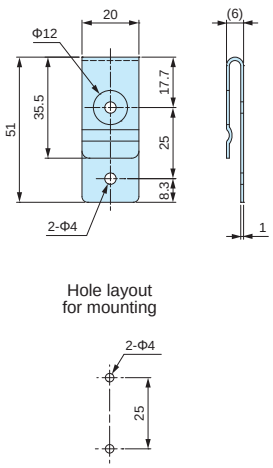

DK-2

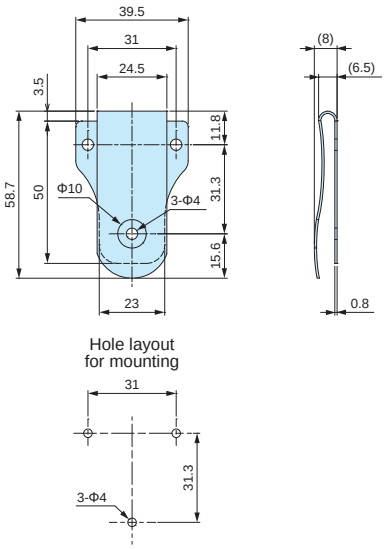

Product no. / Dimensions

Product no.	Material	Finish
DK-1	Steel SPCC t=1.0	Chrome plated
DK-2	Steel SPCC t=0.8	Chrome plated

TPS series TAPPING STANDOFF

NEW SIZE

TPS dimensions

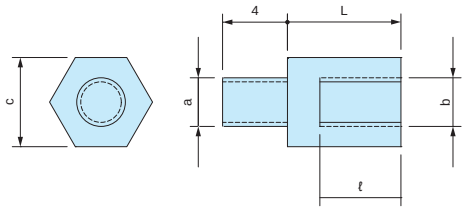

■ DXF/DWG/PDF drawings available on our website.

■ Tapping screw head allows for easy installation onto existing enclosure boss mount.

■ 4 different sizes available : M2.3, M2.6, M3 and M4 size.

Product no. / Dimensions

■ Material / Finish : Brass / Unfinished

Product no.	Screw size (a)	Screw size (b)	c	L	ℓ	Pack of	Suitable models
TPS-M2.3-4	M2.3	M2.3	5	4	3	4	WH series • PFE series LC • LCE • LCS • LCT series PF • PFF series (M2.3 boss models) TW • TWN • TWF series (M2.3 boss models) WP series (M2.3 boss models)
TPS-M2.3-5	M2.3	M2.3	5	5	3	4	
TPS-M2.3-6	M2.3	M2.3	5	6	4	4	
TPS-M2.3-7	M2.3	M2.3	5	7	5	4	
TPS-M2.3-8	M2.3	M2.3	5	8	6	4	
TPS-M2.3-10	M2.3	M2.3	5	10	6	4	
TPS-M2.3-12	M2.3	M2.3	5	12	6	4	
TPS-M2.6-4	M2.6	M2.6	5	4	3	4	PF • PFF series (M2.6 boss models) WP series (M2.6 boss models)
TPS-M2.6-5	M2.6	M2.6	5	5	3	4	
TPS-M2.6-7	M2.6	M2.6	5	7	5	4	
TPS-M2.6-10	M2.6	M2.6	5	10	6	4	
TPS-M2.6-12	M2.6	M2.6	5	12	6	4	
TPS-M3-4	M3	M3	5.5	4	3	4	TWS • TW • TWN • TWF series (M3 boss models)
TPS-M3-5	M3	M3	5.5	5	3	4	
TPS-M3-6	M3	M3	5.5	6	4	4	
TPS-M3-7	M3	M3	5.5	7	5	4	
TPS-M3-8	M3	M3	5.5	8	5	4	
TPS-M3-10	M3	M3	5.5	10	6	4	
TPS-M3-12	M3	M3	5.5	12	6	4	
NEW TPS-M4-6	M4	M4	7	6	4	4	BCAP • BCPC • BCPK • BCAR • BCPR series (M4 boss models)
NEW TPS-M4-10	M4	M4	7	10	6	4	
NEW TPS-M4-15	M4	M4	7	15	8	4	
NEW TPS-M4-20	M4	M4	7	20	10	4	

■ Please use a suitable sized socket driver to both secure and loosen the tapping standoff.

MT series PCB MOUNTING SCREWS for TPS

Pan head

■ PCB mounting Screws for TPS tapping standoffs

Product no. / Dimensions

Product no.	M	L	Head style	Material	Finish	Pack of
MT2.3-4	2.3	4	Pan	Steel	Trivalent chromate	20
MT2.3-6	2.3	6		Steel	Trivalent chromate	20
MT2.6-4	2.6	4		Steel	Trivalent chromate	20
MT3-4	3	4		Steel	Trivalent chromate	20

EM series PCB MOUNTING SCREW

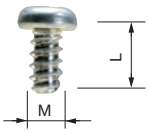

- Self-tapping screws for mounting PCB on bosses or standoffs.
- EM-3-6 self-tapping screws are suitable for mounting 1.6mm or thicker PCB.

Product no. / Dimensions

Product no.	M	L	Material	Finish	suitable models	Pack of
EM-1.6	1.6	4	Steel	Trivalent chromate	CSS • CS WC • PS (M1.6 boss models)	50
EM-2	2	5	Steel	Trivalent chromate	SIC • SIM • WC • PS • TW • TWN • TWF WC • WP (M2 boss models)	50
EM-2.3	2.3	6	Steel	Trivalent chromate	WH • LC • LCT • LCS • LCE • PFE WSC (Top cover bosses) PF • PFF (M2.3 boss models) TW • TWN • TWF (M2.3 boss models) WP (M2.3 boss models)	50
EM-2.3-8	2.3	8	Steel	Trivalent chromate	WSC (Bottom base bosses)	50
EM-2.6	2.6	6	Steel	Trivalent chromate	PF • PFF • WP (M2.6 boss models)	50
EM-3	3	5	Steel	Trivalent chromate	TWS • TW • TWN • TWF (M3 boss models)	50
EM-3-6	3	6	Steel	Trivalent chromate		50

MR series TORX SCREW

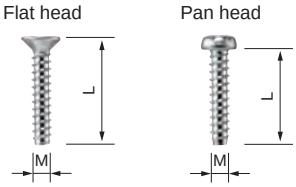

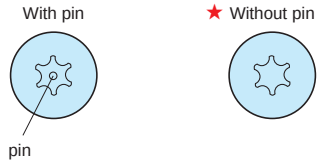

★ : MR1.6-6S, MR-2S, MR2.6-10□, and MR3-14□ are without pin.

Product no. / Dimensions

★Mark = Without pin

Product no.	M	L	head no.	Head style	Material	Finish	Suitable models	Pack of
MR1.6-6S★	1.6	6	T3	Pan	Steel	Nickel plated	CSS • CS	20
MR2.5-8PS	2.5	8	T8	Pan	Steel	Nickel plated	PF • PFE • PFF (M2.5 boss models)	20
MR2.6-10S★	2.6	10	T8	Flat	Steel	Nickel plated	TW • TWN (M2.6 boss models) TWF (M2.6 boss models) MX • MXA • MXB • MXF (M2.6 boss models)	20
MR2.6-10B★	2.6	10	T8	Flat	Steel	Black trivalent chromate		20
MR2.6-12PS	2.6	12	T8	Pan	Steel	Nickel plated	LCT • LCS • LC115-F2 / F3 LCT • LCS • LC145S-F6	20
MR2.6-14PS	2.6	14	T8	Pan	Steel	Nickel plated	LCT • LCS • LC115H-F2 / F3 / M2 / 9V LCT • LCS • LC135-F4 / M2 / M3 / 9V LCT • LCS • LC135H-F4 / M2 / M3 / 9V LCT • LCS • LC145-F6 / M2 / M4 LCT • LCS • LC145H-F6 / M2 / M4 LCT • LCS • LC165-M4 LCT • LCS • LC165H-M4	20
MR2.6-14S	2.6	14	T8	Flat	Steel	Nickel plated	LCT • LCS • LC115-N / F2 / F3 LCT • LCS • LC145S-F6 / 145S-N LCE115-N TW • TWN7-2-11 / 7-4-11 / 7-5-11 TWF7-2-11 / 7-4-11 / 7-5-11 / 8-2-8 / 8-4-8	20
MR2.6-18S	2.6	18	T8	Flat	Steel	Nickel plated	LCT • LCS • LC115H-N / F2 / F3 / M2 / 9V LCT • LCS • LC135-N / F4 / M2 / M3 / 9V LCT • LCS • LC135H-N / F4 / M2 / M3 / 9V LCT • LCS • LC145-N / F6 / M2 / M4 LCT • LCS • LC145H-N / F6 / M2 / M4 LCT • LCS • LC165-N / M4 LCT • LCS • LC165H-N / M4 LCE115H-N • LCE135-N • LCE145H-N • LCE165H-N	20
MR3-8PS	3	8	T10	Pan	Steel	Nickel plated	PF • PFE • PFF (M3 boss models)	20
MR3-14S★	3	14	T10	Flat	Steel	Nickel plated	TW • TWN (M3 boss models) TWF (M3 boss models) MX • MXA • MXB • MXF (M3 boss models)	20
MR3-14B★	3	14	T10	Flat	Steel	Black trivalent chromate		20
MR-1S	3	5	T10	Flat	Steel	Nickel plated	UC	20
MR-1B	3	5	T10	Flat	Steel	Black trivalent chromate		20

AU series

NEXT GENERATION Aluminium Case

The perfect unity of flexibility, versatility, and appearance!

4 Distinct Models for Different Applications

Standard Model AU series

Standard model with front/rear sheet aluminium panels.

See page 151 ~ 154

Detachable Panel Model AUP series

Easy maintenance with detachable front/rear panels.
An EMC shielded AUPE series is also available.

See page 155 ~ 162

Control Box Model AUX series

Structure of extruded aluminium frames on 4 sides.

Suitable for control box use.

EMC shielded AUXE series is also available.

See page 163 ~ 170

Corner Guard Model AUG series

TPE Corner guard model.
An EMC shielded AUGE series is also available.

See page 171 ~ 178

Providing versatile and flexible enclosing solutions

The aluminium case AU series has an assembly-type structure which allows it to be easily customizable. Both versatile and flexible, it is designed to be used as various devices from the classic audio amplifiers to next-gen IoT devices.
Select from a huge line-up of 117 different sizes based on your application type and ideas.

Measuring Equipment

Fiber Optic Transmitter

IoT Gateway

Audio Amplifier

Command Panel

Industrial Embedded PC

Power Supply

AUPE series EMC SHIELDED ENCLOSURE with DETACHABLE PANELS

NEW

EMC Shielding Effects

- Elegantly designed EMC shielded aluminium enclosure with detachable front/rear panels.
- Suitable to be used as an easy maintenance desktop case due to its detachable front/rear panels.
  Captive screws allow for ease of maintenance as there is little risk of the screws dropping out and getting lost.
- A large selection of 117 different sizes to choose from.

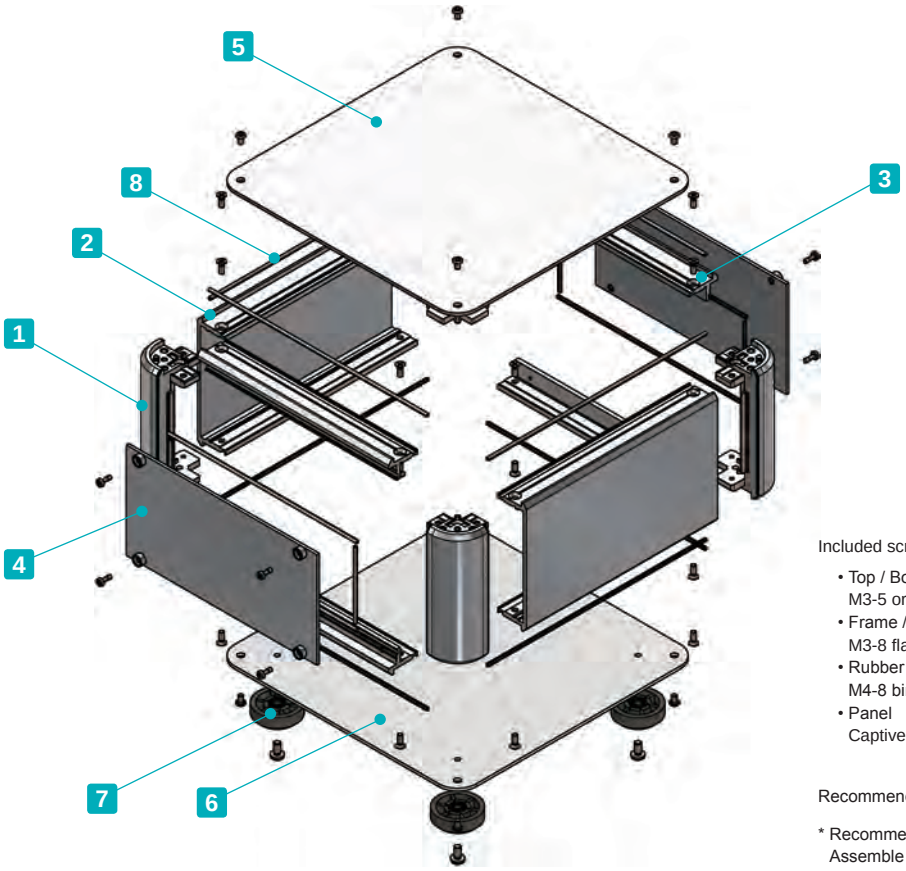

Included screws

- Top / Bottom cover
  M3-5 original trapezoid head (plus / hex) & Nickel plated x 8~16 pcs
- Frame / Panel support frame
  M3-8 flat head & Nickel plated x 16 pcs
- Rubber feet / Aluminium feet
  M4-8 bind head & Black trivalent chromate x 4 pcs
- Panel
  Captive M2.5-7 pan head & Nickel plated x 8 ~ 12 pcs

Recommended torque : M2.5 - 0.15 ~ 0.2N • m
M3 / M4 - 0.3 ~ 0.6N • m

* Recommended torque listed is for reference only; actual may differ.
Assemble after testing torque.

Components

No.	Part name	Pcs	Material	Color / Finish
1	Corner block	4	Diecast aluminium ADC12	Silver • Black / Painted (Unfinished inside)
2	Frame	2	Extruded aluminium A6063S-T5	Silver / Painted (Unfinished inside)
3	Panel support frame	4	Extruded aluminium A6063S-T5	Silver / Painted (Unfinished inside)
4	Panel	2	Aluminium A1100P	Silver / Painted (Conductive inside)
5	Top cover	1	Aluminium A1100P	Silver / Painted (Conductive inside)
6	Bottom cover	1	Aluminium A1100P	Silver / Painted (Conductive inside)
7	Rubber feet : Aluminium feet	4	TPE (Elastomer) : Aluminium	Black : Silver / Anodized
8	EMC shielding gasket	16	Conductive fiber UL94V-0	Metallic gray

AUPE dimensions

■ DXF/DWG/PDF/STP drawings available on our website.

■ Feet is selectable between rubber or aluminium type.
※Rubber and aluminium feet height are different.

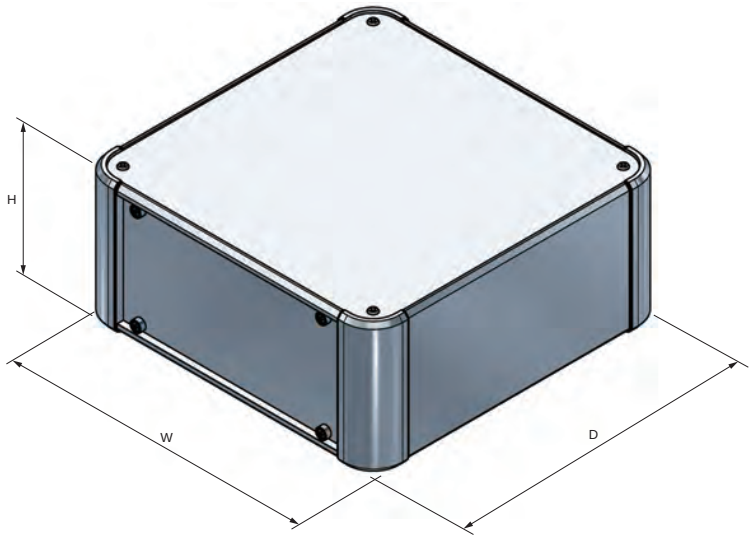

Rubber Feet

Aluminium Feet

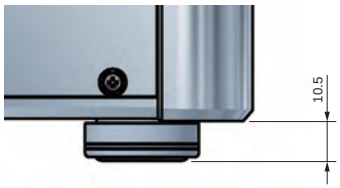

■ Install the EMC shielding gasket into the grooves on the frame, panel support frame, and corner block.

Frame

Panel support frame

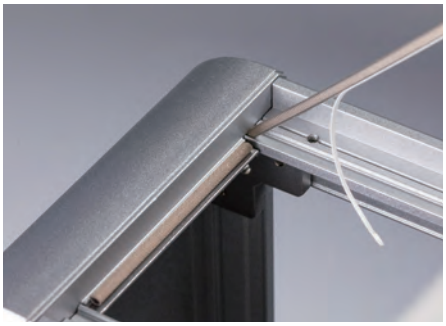

Corner block

Accessories (Optional parts)

Mounting plate AUC series
See page 179 ~ 180

Elastomer carrying handle FM200
See website

Tilt leg TLW series
See page 222

EMC shielding fan filter EMF series
See website

To select Feet/Screw/Color types, follow steps 1 ~ 3 below.

1 Feet Type

R Rubber (Black / Unfinished)

A Aluminium (Silver / Anodized)

2 Screw Type

P Plus (Silver / Nickel plated)

H Hex (Silver / Nickel plated)

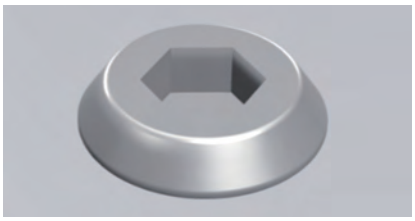

Hex wrench included.

3 Color Type

Please choose from the color combinations listed below.

S S

S B

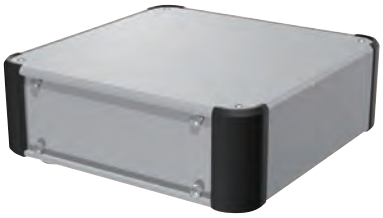

To determine a product number, suffix Feet/Screw/Color code at the end of product number.

Product Number

AUPE □ - □ - □ □□ - □□

H-W-D dimensions	1 Feet	2 Screw	3 Color
See page 162 for dimensions / product no.	R or A	P or H	SS • SB

Numbering example :
If looking at "H133 x W300 x D200mm, Feet type A, Screw type H, Color type SS"

➡ AUPE 133-30-20 AH-SS

Product no. / Dimensions

■ Please suffix feet, screw, and color code at the end of the product number

Product no.	H	W	D	Weight (kg)
AUPE 66-16-16□□-□□	66	160	160	0.9
AUPE 66-16-20□□-□□	66	160	200	1.0
AUPE 66-16-25□□-□□	66	160	250	1.2
AUPE 66-16-30□□-□□	66	160	300	1.4
AUPE 66-20-16□□-□□	66	200	160	1.0
AUPE 66-20-20□□-□□	66	200	200	1.2
AUPE 66-20-25□□-□□	66	200	250	1.4
AUPE 66-20-30□□-□□	66	200	300	1.5
AUPE 66-20-36□□-□□	66	200	360	1.8
AUPE 66-20-43□□-□□	66	200	430	2.0
AUPE 66-25-16□□-□□	66	250	160	1.2
AUPE 66-25-20□□-□□	66	250	200	1.4
AUPE 66-25-25□□-□□	66	250	250	1.6
AUPE 66-25-30□□-□□	66	250	300	1.8
AUPE 66-25-36□□-□□	66	250	360	2.0
AUPE 66-25-43□□-□□	66	250	430	2.3
AUPE 66-30-16□□-□□	66	300	160	1.4
AUPE 66-30-20□□-□□	66	300	200	1.6
AUPE 66-30-25□□-□□	66	300	250	1.8
AUPE 66-30-30□□-□□	66	300	300	2.0
AUPE 66-30-36□□-□□	66	300	360	2.3
AUPE 66-30-43□□-□□	66	300	430	2.6
AUPE 66-30-50□□-□□	66	300	500	3.0
AUPE 66-36-20□□-□□	66	360	200	1.8
AUPE 66-36-25□□-□□	66	360	250	2.0
AUPE 66-36-30□□-□□	66	360	300	2.3
AUPE 66-36-36□□-□□	66	360	360	2.6
AUPE 66-36-43□□-□□	66	360	430	3.0
AUPE 66-36-50□□-□□	66	360	500	3.4
AUPE 66-43-20□□-□□	66	430	200	2.1
AUPE 66-43-25□□-□□	66	430	250	2.4
AUPE 66-43-30□□-□□	66	430	300	2.7
AUPE 66-43-36□□-□□	66	430	360	3.0
AUPE 66-43-43□□-□□	66	430	430	3.4
AUPE 66-43-50□□-□□	66	430	500	3.9
AUPE 66-50-30□□-□□	66	500	300	3.0
AUPE 66-50-36□□-□□	66	500	360	3.4
AUPE 66-50-43□□-□□	66	500	430	3.9
AUPE 66-50-50□□-□□	66	500	500	4.3
AUPE 88-16-16□□-□□	88	160	160	1.0
AUPE 88-16-20□□-□□	88	160	200	1.2
AUPE 88-16-25□□-□□	88	160	250	1.3
AUPE 88-16-30□□-□□	88	160	300	1.5
AUPE 88-20-16□□-□□	88	200	160	1.2
AUPE 88-20-20□□-□□	88	200	200	1.3
AUPE 88-20-25□□-□□	88	200	250	1.5
AUPE 88-20-30□□-□□	88	200	300	1.7
AUPE 88-20-36□□-□□	88	200	360	1.9
AUPE 88-20-43□□-□□	88	200	430	2.2
AUPE 88-25-16□□-□□	88	250	160	1.3
AUPE 88-25-20□□-□□	88	250	200	1.5
AUPE 88-25-25□□-□□	88	250	250	1.7
AUPE 88-25-30□□-□□	88	250	300	1.9
AUPE 88-25-36□□-□□	88	250	360	2.2
AUPE 88-25-43□□-□□	88	250	430	2.5
AUPE 88-30-16□□-□□	88	300	160	1.5
AUPE 88-30-20□□-□□	88	300	200	1.7
AUPE 88-30-25□□-□□	88	300	250	1.9
AUPE 88-30-30□□-□□	88	300	300	2.2

Product no.	H	W	D	Weight (kg)
AUPE 88-30-36□□-□□	88	300	360	2.5
AUPE 88-30-43□□-□□	88	300	430	2.9
AUPE 88-30-50□□-□□	88	300	500	3.2
AUPE 88-36-20□□-□□	88	360	200	1.9
AUPE 88-36-25□□-□□	88	360	250	2.2
AUPE 88-36-30□□-□□	88	360	300	2.5
AUPE 88-36-36□□-□□	88	360	360	2.8
AUPE 88-36-43□□-□□	88	360	430	3.2
AUPE 88-36-50□□-□□	88	360	500	3.6
AUPE 88-43-20□□-□□	88	430	200	2.2
AUPE 88-43-25□□-□□	88	430	250	2.6
AUPE 88-43-30□□-□□	88	430	300	2.9
AUPE 88-43-36□□-□□	88	430	360	3.3
AUPE 88-43-43□□-□□	88	430	430	3.7
AUPE 88-43-50□□-□□	88	430	500	4.1
AUPE 88-50-30□□-□□	88	500	300	3.2
AUPE 88-50-36□□-□□	88	500	360	3.6
AUPE 88-50-43□□-□□	88	500	430	4.1
AUPE 88-50-50□□-□□	88	500	500	4.6
AUPE133-16-16□□-□□	132.5	160	160	1.3
AUPE133-16-20□□-□□	132.5	160	200	1.4
AUPE133-16-25□□-□□	132.5	160	250	1.7
AUPE133-16-30□□-□□	132.5	160	300	1.9
AUPE133-20-16□□-□□	132.5	200	160	1.4
AUPE133-20-20□□-□□	132.5	200	200	1.6
AUPE133-20-25□□-□□	132.5	200	250	1.9
AUPE133-20-30□□-□□	132.5	200	300	2.1
AUPE133-20-36□□-□□	132.5	200	360	2.4
AUPE133-20-43□□-□□	132.5	200	430	2.7
AUPE133-25-16□□-□□	132.5	250	160	1.6
AUPE133-25-20□□-□□	132.5	250	200	1.8
AUPE133-25-25□□-□□	132.5	250	250	2.1
AUPE133-25-30□□-□□	132.5	250	300	2.4
AUPE133-25-36□□-□□	132.5	250	360	2.7
AUPE133-25-43□□-□□	132.5	250	430	3.1
AUPE133-30-16□□-□□	132.5	300	160	1.8
AUPE133-30-20□□-□□	132.5	300	200	2.1
AUPE133-30-25□□-□□	132.5	300	250	2.3
AUPE133-30-30□□-□□	132.5	300	300	2.6
AUPE133-30-36□□-□□	132.5	300	360	3.0
AUPE133-30-43□□-□□	132.5	300	430	3.4
AUPE133-30-50□□-□□	132.5	300	500	3.8
AUPE133-36-20□□-□□	132.5	360	200	2.3
AUPE133-36-25□□-□□	132.5	360	250	2.6
AUPE133-36-30□□-□□	132.5	360	300	3.0
AUPE133-36-36□□-□□	132.5	360	360	3.4
AUPE133-36-43□□-□□	132.5	360	430	3.8
AUPE133-36-50□□-□□	132.5	360	500	4.3
AUPE133-43-20□□-□□	132.5	430	200	2.7
AUPE133-43-25□□-□□	132.5	430	250	3.0
AUPE133-43-30□□-□□	132.5	430	300	3.4
AUPE133-43-36□□-□□	132.5	430	360	3.8
AUPE133-43-43□□-□□	132.5	430	430	4.3
AUPE133-43-50□□-□□	132.5	430	500	4.8
AUPE133-50-30□□-□□	132.5	500	300	3.8
AUPE133-50-36□□-□□	132.5	500	360	4.2
AUPE133-50-43□□-□□	132.5	500	430	4.8
AUPE133-50-50□□-□□	132.5	500	500	5.4

*Weight listed is calculated based on rubber feet selection.

AUXE series EMC SHIELDED ALUMINIUM CONTROL BOX

NEW

EMC Shielding Effects

- Round corner designed aluminium enclosure with 4 extruded aluminium frames.
- Shielding gasket allows the enclosure to be EMC shielded.
- A wide selection of 75 different sizes to choose from.
- Feet is selectable between adhesive rubber or aluminium type.

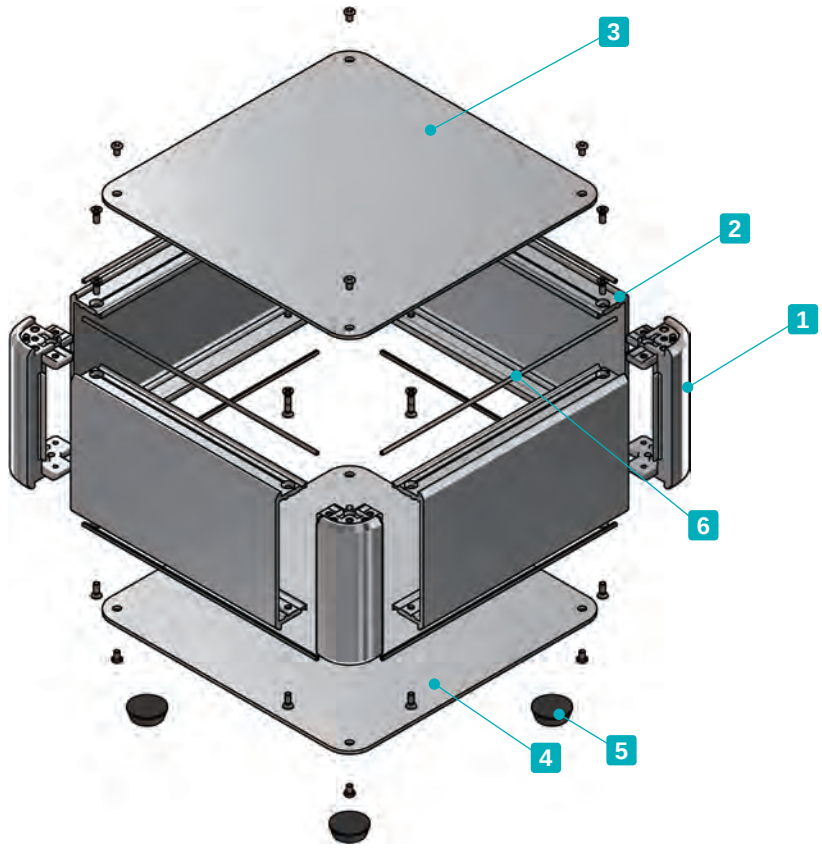

Included screws

- Top / Bottom cover
  M3-5 original trapezoid head (plus / hex) & Nickel plated x 8~16 pcs
- Frame
  M3-8 flat head & Nickel plated x 16 pcs
- Aluminium feet
  M4-8 bind head & Black trivalent chromate x 4 pcs

Recommended torque : 0.3 ~ 0.6N • m
* Recommended torque listed is for reference only; actual may differ.
Assemble after testing torque.

Components

No.	Part name	Pcs	Material	Color / Finish
1	Corner block	4	Diecast aluminium ADC12	Silver • Black / Painted (Unfinished inside)
2	Frame	4	Extruded aluminium A6063S-T5	Silver / Painted (Unfinished inside)
3	Top cover	1	Aluminium A1100P	Silver / Painted (Conductive inside)
4	Bottom cover	1	Aluminium A1100P	Silver / Painted (Conductive inside)
5	Adhesive Rubber feet : Aluminium feet	4	Synthetic rubber : Aluminium	Black : Silver / Anodized
6	EMC shielding gasket	8	Conductive fiber UL94V-0	Metallic gray

AUXE dimensions

■ DXF/DWG/PDF/STP drawings available on our website.

■ Feet is selectable between rubber or aluminium type.
※Rubber and aluminium feet height are different.

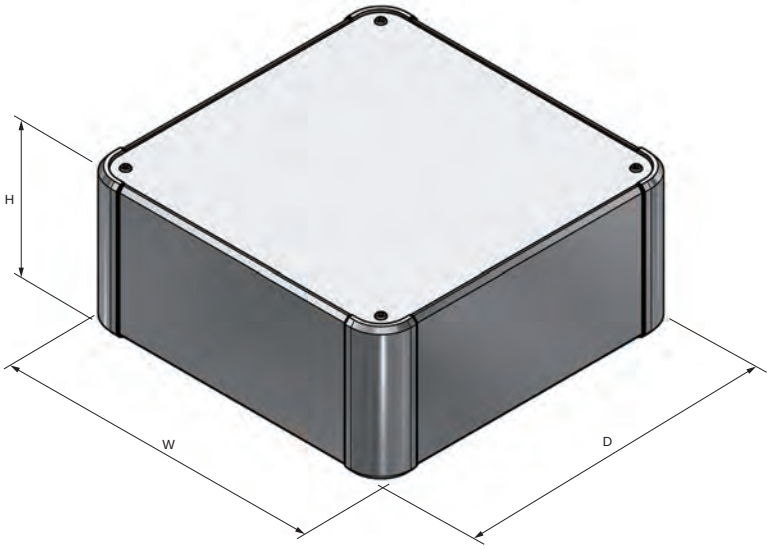

Rubber Feet

Aluminium Feet

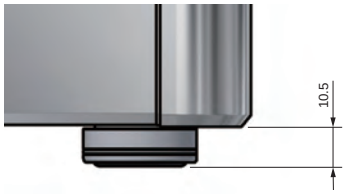

■ Install the EMC shielding gasket into the grooves on the frame and corner block.

Accessories (Optional parts)

Wall mount support arm MAR series
See page 181 ~ 182

Mounting plate AUC series
See page 179 ~ 180

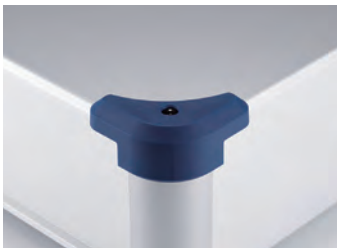

Corner guard AUCG series
See page 180

Elastomer carrying handle FM200
See website

Aluminium handle OH series
See website

To select Feet/Screw/Color types, follow steps 1 ~ 3 below.

1 Feet Type

R Adhesive Rubber (Black / Unfinished)

A Aluminium (Silver / Anodized)

2 Screw Type

P Plus (Silver / Nickel plated)

H Hex (Silver / Nickel plated)

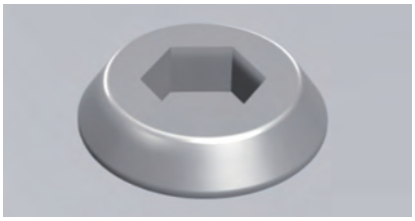

Hex wrench included.

3 Color Type

Please choose from the color combinations listed below.

S S

S B

To determine a product number, suffix Feet/Screw/Color code at the end of product number.

Product Number

AUXE □ - □ - □ □ □ - □ □

H-W-D dimensions	1 Feet	2 Screw	3 Color
See page 170 for dimensions / product no.	R or A	P or H	SS • SB

Numbering example :
If looking at "H133 x W300 x D300mm, Feet type R, Screw type P, Color type SB"

➡ **AUXE 133-30-30 RP-SB**

Product no. / Dimensions

■ Please suffix feet, screw, and color code at the end of the product number

Product no.	H	W	D	Weight (kg)
AUXE 66-16-16□□-□□	66	160	160	0.9
AUXE 66-20-16□□-□□	66	200	160	1.0
AUXE 66-20-20□□-□□	66	200	200	1.1
AUXE 66-25-16□□-□□	66	250	160	1.2
AUXE 66-25-20□□-□□	66	250	200	1.3
AUXE 66-25-25□□-□□	66	250	250	1.5
AUXE 66-30-16□□-□□	66	300	160	1.3
AUXE 66-30-20□□-□□	66	300	200	1.5
AUXE 66-30-25□□-□□	66	300	250	1.7
AUXE 66-30-30□□-□□	66	300	300	2.0
AUXE 66-36-20□□-□□	66	360	200	1.7
AUXE 66-36-25□□-□□	66	360	250	2.0
AUXE 66-36-30□□-□□	66	360	300	2.2
AUXE 66-36-36□□-□□	66	360	360	2.6
AUXE 66-43-20□□-□□	66	430	200	2.0
AUXE 66-43-25□□-□□	66	430	250	2.3
AUXE 66-43-30□□-□□	66	430	300	2.6
AUXE 66-43-36□□-□□	66	430	360	3.0
AUXE 66-43-43□□-□□	66	430	430	3.4
AUXE 66-50-30□□-□□	66	500	300	2.9
AUXE 66-50-36□□-□□	66	500	360	3.3
AUXE 66-50-43□□-□□	66	500	430	3.8
AUXE 66-50-50□□-□□	66	500	500	4.3
AUXE 66-60-36□□-□□	66	600	360	3.9
AUXE 66-60-43□□-□□	66	600	430	4.4
AUXE 88-16-16□□-□□	88	160	160	1.0
AUXE 88-20-16□□-□□	88	200	160	1.1
AUXE 88-20-20□□-□□	88	200	200	1.3
AUXE 88-25-16□□-□□	88	250	160	1.3
AUXE 88-25-20□□-□□	88	250	200	1.5
AUXE 88-25-25□□-□□	88	250	250	1.7
AUXE 88-30-16□□-□□	88	300	160	1.5
AUXE 88-30-20□□-□□	88	300	200	1.7
AUXE 88-30-25□□-□□	88	300	250	1.9
AUXE 88-30-30□□-□□	88	300	300	2.2
AUXE 88-36-20□□-□□	88	360	200	1.9
AUXE 88-36-25□□-□□	88	360	250	2.2
AUXE 88-36-30□□-□□	88	360	300	2.5
AUXE 88-36-36□□-□□	88	360	360	2.8
AUXE 88-43-20□□-□□	88	430	200	2.2
AUXE 88-43-25□□-□□	88	430	250	2.5
AUXE 88-43-30□□-□□	88	430	300	2.8
AUXE 88-43-36□□-□□	88	430	360	3.2
AUXE 88-43-43□□-□□	88	430	430	3.6
AUXE 88-50-30□□-□□	88	500	300	3.2
AUXE 88-50-36□□-□□	88	500	360	3.6
AUXE 88-50-43□□-□□	88	500	430	4.1
AUXE 88-50-50□□-□□	88	500	500	4.6
AUXE 88-60-36□□-□□	88	600	360	4.2
AUXE 88-60-43□□-□□	88	600	430	4.7

Product no.	H	W	D	Weight (kg)
AUXE133-16-16□□-□□	132.5	160	160	1.3
AUXE133-20-16□□-□□	132.5	200	160	1.5
AUXE133-20-20□□-□□	132.5	200	200	1.7
AUXE133-25-16□□-□□	132.5	250	160	1.7
AUXE133-25-20□□-□□	132.5	250	200	1.9
AUXE133-25-25□□-□□	132.5	250	250	2.2
AUXE133-30-16□□-□□	132.5	300	160	1.9
AUXE133-30-20□□-□□	132.5	300	200	2.1
AUXE133-30-25□□-□□	132.5	300	250	2.4
AUXE133-30-30□□-□□	132.5	300	300	2.7
AUXE133-36-20□□-□□	132.5	360	200	2.4
AUXE133-36-25□□-□□	132.5	360	250	2.7
AUXE133-36-30□□-□□	132.5	360	300	3.1
AUXE133-36-36□□-□□	132.5	360	360	3.5
AUXE133-43-20□□-□□	132.5	430	200	2.8
AUXE133-43-25□□-□□	132.5	430	250	3.1
AUXE133-43-30□□-□□	132.5	430	300	3.5
AUXE133-43-36□□-□□	132.5	430	360	3.9
AUXE133-43-43□□-□□	132.5	430	430	4.4
AUXE133-50-30□□-□□	132.5	500	300	3.9
AUXE133-50-36□□-□□	132.5	500	360	4.4
AUXE133-50-43□□-□□	132.5	500	430	5.0
AUXE133-50-50□□-□□	132.5	500	500	5.5
AUXE133-60-36□□-□□	132.5	600	360	5.0
AUXE133-60-43□□-□□	132.5	600	430	5.7

*Weight listed is calculated based on rubber feet selection.

AUGE series EMC SHIELDED ALUMINIUM ENCLOSURE with CORNER GUARD

NEW

EMC Shielding Effects

- Shielding gasket allows the enclosure to be EMC shielded.
- Rugged design EMC shielded aluminium enclosure with TPE (Elastomer) corner guards.
  Corner guards also act as non-slip rubber feet.
- Suitable to be used as an easy maintenance desktop case due to its detachable front/rear panels.
  Captive screws allow for ease of maintenance as there is little risk of the screws dropping out and getting lost.
- A large selection of 117 different sizes to choose from.
- A total of 4 selectable color combinations with a silver anodized body and 4 corner guard colors - Black, Gray, Navy and Red.

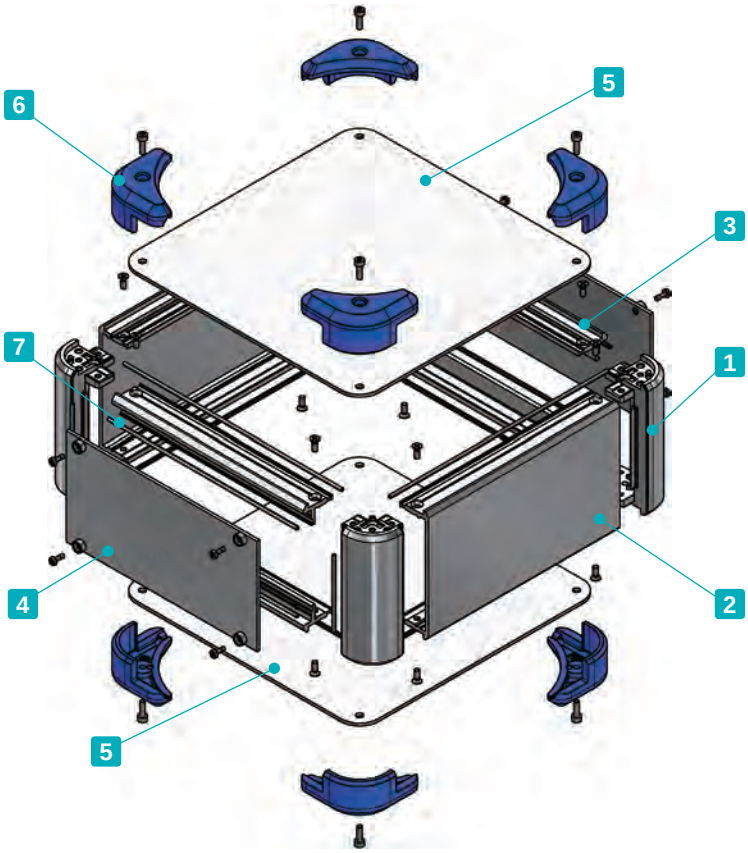

Included screws :

- Top / Bottom cover (not applicable to some models)
  M3-5 original trapezoid head (hex) & Nickel plated x 4~8 pcs
- Frame / Panel support frame
  M3-8 flat head & Nickel plated x 16 pcs
- Corner guard
  M3-10 hex & Black trivalent chromate x 8 pcs
  * Hex wrench included.
- Panel
  Captive M2.5-7 pan head & Nickel plated x 8~12 pcs

Recommended torque :
- M3 -10 hex - 0.2N • m
- M2.5-7 pan head - 0.15 ~ 0.2N • m
- Other screws - 0.3 ~ 0.6N • m

* Recommended torque listed is for reference only; actual may differ.
  Assemble after testing torque.

Components

No.	Part name	Pcs	Material	Color / Finish
1	Corner block	4	Diecast aluminium ADC12	Silver / Painted (Unfinished inside)
2	Frame	2	Extruded aluminium A6063S-T5	Silver / Painted (Unfinished inside)
3	Panel support frame	4	Extruded aluminium A6063S-T5	Silver / Painted (Unfinished inside)
4	Panel	2	Aluminium A1100P	Silver / Painted (Conductive inside)
5	Top • bottom cover	2	Aluminium A1100P	Silver / Painted (Conductive inside)
6	Corner guard	8	TPE (Elastomer)	Black • Gray • Navy • Red
7	EMC shielding gasket	16	Conductive fiber UL94V-0	Metallic gray

AUGE dimensions

■ DXF/DWG/PDF/STP drawings available on our website.

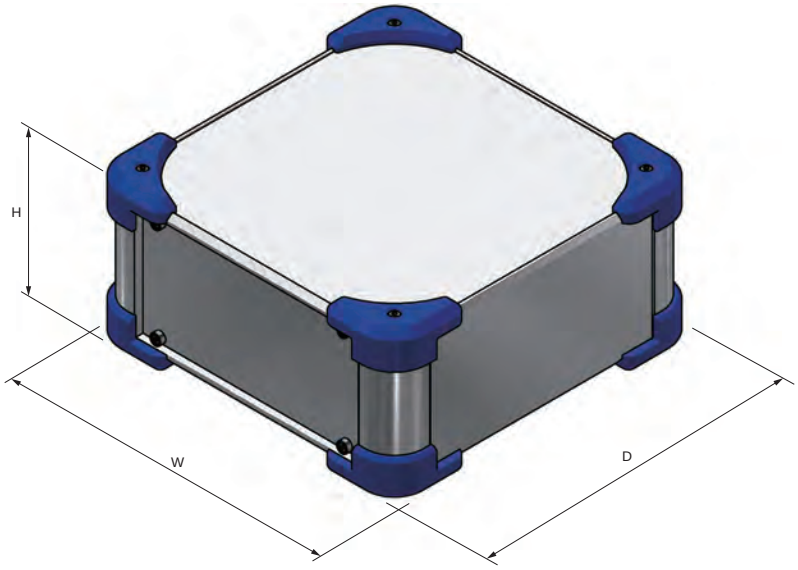

■ Install the EMC shielding gasket into the grooves on the frame, panel support frame, and corner block.

Frame

Panel support frame

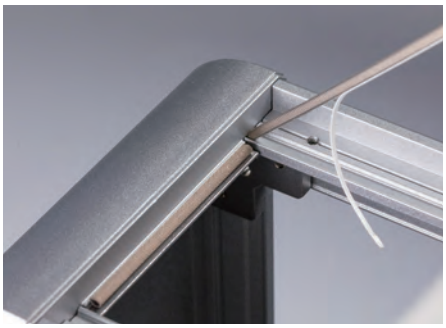

Corner block

Accessories (Optional parts)

Mounting plate AUC series
See page 179 ~ 180

Elastomer carrying handle FM200
See website

Tilt leg TLW series
See page 222

EMC shielding fan filter EMF series
See website

Color Type

Please choose from the color combinations listed below.

S B (Silver / Black)

S G (Silver / Gray)

S N (Silver / Navy)

S R (Silver / Red)

Product Number To determine a product number, please suffix Color code at the end of product number.

AUGE □ - □ - □ - □□

H-W-D dimensions

See page 178 for dimensions / product no.

Color

SB • SG • SN • SR

Numbering example :
If looking at "H133 x W438 x D308mm, Color type SN"

➡ **AUGE 133-43-30-SN**

Product no. / Dimensions

■ Please suffix color code at the end of the product number.

Product no.	H	W	D	Weight (kg)
AUGE 66-16-16-□□	78	168	168	0.9
AUGE 66-16-20-□□	78	168	208	1.1
AUGE 66-16-25-□□	78	168	258	1.2
AUGE 66-16-30-□□	78	168	308	1.4
AUGE 66-20-16-□□	78	208	168	1.1
AUGE 66-20-20-□□	78	208	208	1.2
AUGE 66-20-25-□□	78	208	258	1.4
AUGE 66-20-30-□□	78	208	308	1.6
AUGE 66-20-36-□□	78	208	368	1.8
AUGE 66-20-43-□□	78	208	438	2.1
AUGE 66-25-16-□□	78	258	168	1.2
AUGE 66-25-20-□□	78	258	208	1.4
AUGE 66-25-25-□□	78	258	258	1.6
AUGE 66-25-30-□□	78	258	308	1.8
AUGE 66-25-36-□□	78	258	368	2.0
AUGE 66-25-43-□□	78	258	438	2.4
AUGE 66-30-16-□□	78	308	168	1.4
AUGE 66-30-20-□□	78	308	208	1.6
AUGE 66-30-25-□□	78	308	258	1.8
AUGE 66-30-30-□□	78	308	308	2.0
AUGE 66-30-36-□□	78	308	368	2.3
AUGE 66-30-43-□□	78	308	438	2.7
AUGE 66-30-50-□□	78	308	508	3.0
AUGE 66-36-20-□□	78	368	208	1.8
AUGE 66-36-25-□□	78	368	258	2.1
AUGE 66-36-30-□□	78	368	308	2.3
AUGE 66-36-36-□□	78	368	368	2.6
AUGE 66-36-43-□□	78	368	438	3.0
AUGE 66-36-50-□□	78	368	508	3.4
AUGE 66-43-20-□□	78	438	208	2.1
AUGE 66-43-25-□□	78	438	258	2.4
AUGE 66-43-30-□□	78	438	308	2.7
AUGE 66-43-36-□□	78	438	368	3.0
AUGE 66-43-43-□□	78	438	438	3.5
AUGE 66-43-50-□□	78	438	508	3.9
AUGE 66-50-30-□□	78	508	308	3.0
AUGE 66-50-36-□□	78	508	368	3.4
AUGE 66-50-43-□□	78	508	438	3.9
AUGE 66-50-50-□□	78	508	508	4.4
AUGE 88-16-16-□□	100	168	168	1.0
AUGE 88-16-20-□□	100	168	208	1.2
AUGE 88-16-25-□□	100	168	258	1.4
AUGE 88-16-30-□□	100	168	308	1.5
AUGE 88-20-16-□□	100	208	168	1.2
AUGE 88-20-20-□□	100	208	208	1.3
AUGE 88-20-25-□□	100	208	258	1.5
AUGE 88-20-30-□□	100	208	308	1.7
AUGE 88-20-36-□□	100	208	368	1.9
AUGE 88-20-43-□□	100	208	438	2.2
AUGE 88-25-16-□□	100	258	168	1.4
AUGE 88-25-20-□□	100	258	208	1.5
AUGE 88-25-25-□□	100	258	258	1.7
AUGE 88-25-30-□□	100	258	308	2.0
AUGE 88-25-36-□□	100	258	368	2.2
AUGE 88-25-43-□□	100	258	438	2.6
AUGE 88-30-16-□□	100	308	168	1.5
AUGE 88-30-20-□□	100	308	208	1.7
AUGE 88-30-25-□□	100	308	258	2.0
AUGE 88-30-30-□□	100	308	308	2.2

Product no.	H	W	D	Weight (kg)
AUGE 88-30-36-□□	100	308	368	2.5
AUGE 88-30-43-□□	100	308	438	2.9
AUGE 88-30-50-□□	100	308	508	3.2
AUGE 88-36-20-□□	100	368	208	2.0
AUGE 88-36-25-□□	100	368	258	2.2
AUGE 88-36-30-□□	100	368	308	2.5
AUGE 88-36-36-□□	100	368	368	2.8
AUGE 88-36-43-□□	100	368	438	3.3
AUGE 88-36-50-□□	100	368	508	3.7
AUGE 88-43-20-□□	100	438	208	2.3
AUGE 88-43-25-□□	100	438	258	2.6
AUGE 88-43-30-□□	100	438	308	2.9
AUGE 88-43-36-□□	100	438	368	3.3
AUGE 88-43-43-□□	100	438	438	3.7
AUGE 88-43-50-□□	100	438	508	4.2
AUGE 88-50-30-□□	100	508	308	3.2
AUGE 88-50-36-□□	100	508	368	3.7
AUGE 88-50-43-□□	100	508	438	4.2
AUGE 88-50-50-□□	100	508	508	4.7
AUGE133-16-16-□□	144.5	168	168	1.3
AUGE133-16-20-□□	144.5	168	208	1.5
AUGE133-16-25-□□	144.5	168	258	1.7
AUGE133-16-30-□□	144.5	168	308	1.9
AUGE133-20-16-□□	144.5	208	168	1.4
AUGE133-20-20-□□	144.5	208	208	1.6
AUGE133-20-25-□□	144.5	208	258	1.9
AUGE133-20-30-□□	144.5	208	308	2.1
AUGE133-20-36-□□	144.5	208	368	2.4
AUGE133-20-43-□□	144.5	208	438	2.8
AUGE133-25-16-□□	144.5	258	168	1.6
AUGE133-25-20-□□	144.5	258	208	1.9
AUGE133-25-25-□□	144.5	258	258	2.1
AUGE133-25-30-□□	144.5	258	308	2.4
AUGE133-25-36-□□	144.5	258	368	2.7
AUGE133-25-43-□□	144.5	258	438	3.1
AUGE133-30-16-□□	144.5	308	168	1.8
AUGE133-30-20-□□	144.5	308	208	2.1
AUGE133-30-25-□□	144.5	308	258	2.4
AUGE133-30-30-□□	144.5	308	308	2.7
AUGE133-30-36-□□	144.5	308	368	3.0
AUGE133-30-43-□□	144.5	308	438	3.4
AUGE133-30-50-□□	144.5	308	508	3.8
AUGE133-36-20-□□	144.5	368	208	2.3
AUGE133-36-25-□□	144.5	368	258	2.7
AUGE133-36-30-□□	144.5	368	308	3.0
AUGE133-36-36-□□	144.5	368	368	3.4
AUGE133-36-43-□□	144.5	368	438	3.9
AUGE133-36-50-□□	144.5	368	508	4.3
AUGE133-43-20-□□	144.5	438	208	2.7
AUGE133-43-25-□□	144.5	438	258	3.0
AUGE133-43-30-□□	144.5	438	308	3.4
AUGE133-43-36-□□	144.5	438	368	3.8
AUGE133-43-43-□□	144.5	438	438	4.3
AUGE133-43-50-□□	144.5	438	508	4.9
AUGE133-50-30-□□	144.5	508	308	3.8
AUGE133-50-36-□□	144.5	508	368	4.3
AUGE133-50-43-□□	144.5	508	438	4.8
AUGE133-50-50-□□	144.5	508	508	5.4

AUC series MOUNTING PLATE for AU□ series

NEW

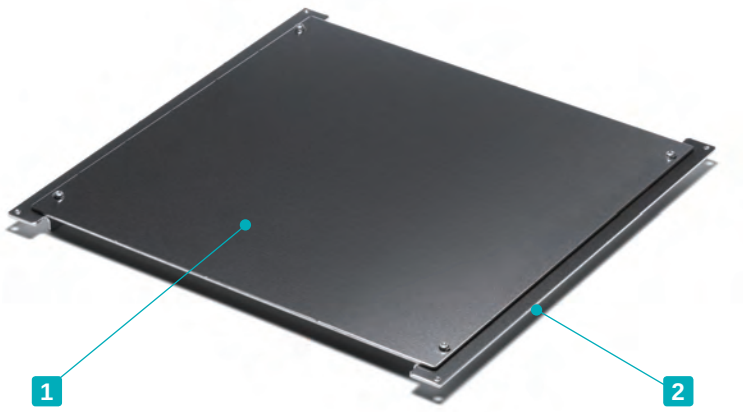

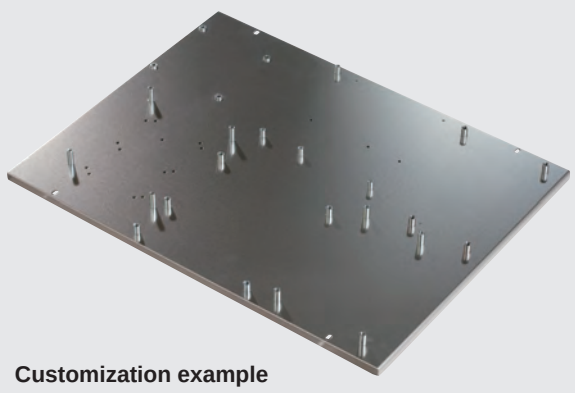

Customization example

■ See page CUSTOM-9 ~ CUSTOM-11 and our website for further details.

■ Mounting plate for AU, AUP, AUPE, AUX, AUXE, AUG and AUGE series.

Components

No.	Part name	Pcs	Material	Finish
1	Mounting plate	1	Aluminium A1050P t=2.0	Unfinished
2	L-bracket	2	Aluminium A1050P t=2.0	Unfinished

Included screw :
- Corner block M3 flat head : Nickel plated x 4
- Mounting plate M3-5 pan head : Trivalent chromate x 4

■ DXF/DWG/PDF drawings available on our website.

AUC dimensions

Non-reinforced (N) type

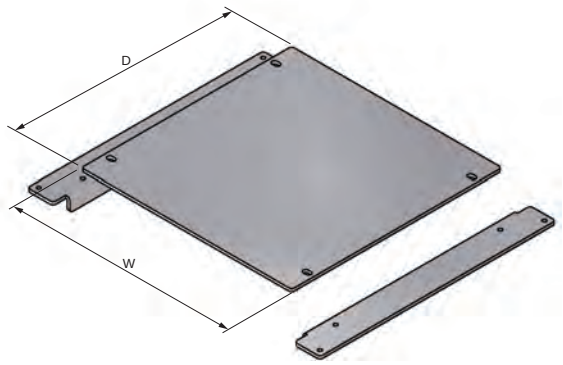

Reinforced (Y) type

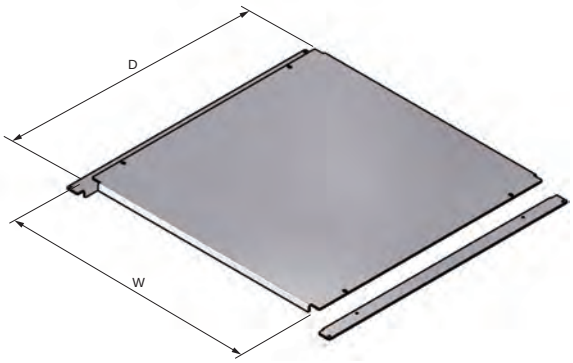

Product no. / Dimensions

Product no.	W	D	Enclosure W x D	Reinforcement	Weight (g)
AUC16-16	108	108	160×160	N	102
AUC16-20	108	148	160×200	N	138
AUC16-25	108	198	160×250	N	181
AUC16-30	108	248	160×300	N	226
AUC20-16	148	108	200×160	N	126
AUC20-20	148	148	200×200	N	170
AUC20-25	148	198	200×250	N	224
AUC20-30	148	248	200×300	N	279
AUC20-36	148	308	200×360	N	345
AUC20-43	148	378	200×430	N	422
AUC25-16	198	108	250×160	N	155
AUC25-20	198	148	250×200	N	210
AUC25-25	198	198	250×250	N	278
AUC25-30	198	248	250×300	N	346
AUC25-36	198	308	250×360	N	428
AUC25-43	198	378	250×430	N	524
AUC30-16	248	108	300×160	N	184
AUC30-20	248	148	300×200	N	249
AUC30-25	248	198	300×250	N	331
AUC30-30	248	248	300×300	N	413
AUC30-36	248	308	300×360	N	512

Product no.	W	D	Enclosure W x D	Reinforcement	Weight (g)
AUC30-43	248	378	300×430	N	626
AUC30-50	248	448	300×500	N	741
AUC36-20	308	148	360×200	N	297
AUC36-25	308	198	360×250	N	395
AUC36-30	308	248	360×300	N	494
AUC36-36	308	308	360×360	N	581
AUC36-43	308	378	360×430	N	749
AUC36-50	308	448	360×500	N	886
AUC43-20	378	148	430×200	Y	353
AUC43-25	378	198	430×250	Y	470
AUC43-30	378	248	430×300	Y	587
AUC43-36	378	308	430×360	Y	728
AUC43-43	378	378	430×430	Y	918
AUC43-50	378	448	430×500	Y	1,082
AUC50-30	448	248	500×300	Y	681
AUC50-36	448	308	500×360	Y	814
AUC50-43	448	378	500×430	Y	1,061
AUC50-50	448	448	500×500	Y	1,257
AUC60-36	548	308	600×360	Y	1,021
AUC60-43	548	378	600×430	Y	1,279

How to install AUC mounting plate

1. Install L-bracket onto countersunk screw hole on corner block.

2. Install mounting plate onto L-bracket with screws.

AUCG series CORNER GUARD for AU□ series

NEW

AUCG dimensions

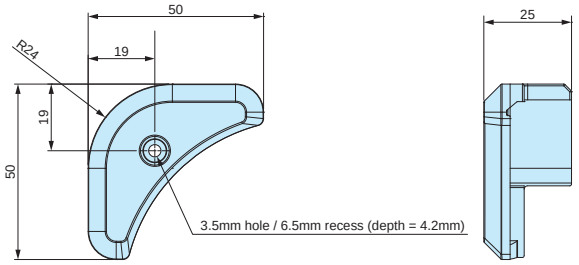

■ DXF/DWG/PDF drawings available on our website.

■ Spare corner guard for AUG and AUGE series. AUCG corner guard can also be installed on AU, AUP, AUPE, AUX, and AUXE series enclosures.

■ 4 colors available: Black, Gray, Navy, and Red. Retailed as a pack of 8pcs.

Product no.

Product no.				Weight (g)	Pack of
● Black	● Gray	● Navy	● Red		
AUCG-1B	AUCG-1G	AUCG-1N	AUCG-1R	9.5	8

AEG series EMC SHIELDING GASKET for AU□ series

NEW

EMC Shielding Effects

■ Spare EMC shielding gasket for AUPE, AUXE, and AUGE series enclosures. Installation on AUP series is possible to allow it to be EMC shielded.

Cross section view

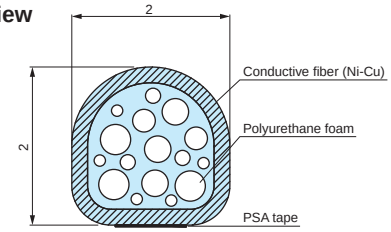

Product no.

Product no.	Material	Color	Sales unit
AEG-1000	Conductive fiber UL94V-0	Metallic gray	1000mm x 1 pc

MULTI-FUNCTION EXTRUDED ALUMINIUM CASE

EXPT • EXP • EXPE • EXW • EXPF • EXEF • EXWF series

The following series, by utilizing similar extrusion frames, are available in 7 different types, such as having IP65, or EMC shielded functions, among others.
73 different sizes are available for each version.

CORNER GUARD

EXP series Page 203 ~ 204

FLANGED

EXPF series Page 209 ~ 210

IP65 CORNER GUARD

EXW series Page 207 ~ 208

IP65 FLANGED

EXWF series Page 213 ~ 214

EMC CORNER GUARD

EXPE series Page 205 ~ 206

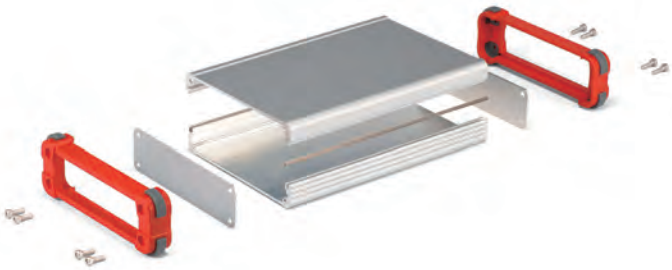

EMC FLANGED

EXEF series Page 211 ~ 212

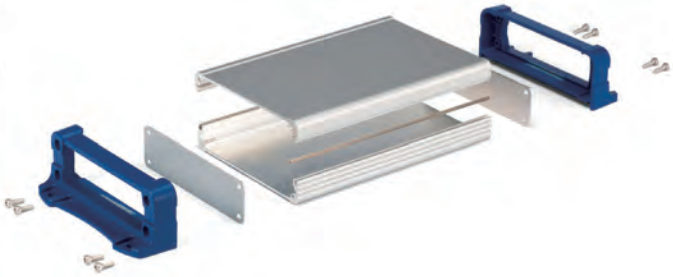

WITH TILT LEG

EXPT series Page 201 ~ 202

Custom length available in 1mm intervals

16 COLOR COMBINATIONS

EXP series is available in 2 different body frame and 8 different exterior frame colors for a total of 16 different color types.

APPLICATION EXAMPLE

Measuring Instrument

Accessories (Optional parts)
Tilt leg TLW series
See page 222

Network / Communication Box

Controller

EXPE series ALUMINIUM EMC SHIELDED CASE with CORNER GUARD

NEW SIZE

EMC Shielding Effects

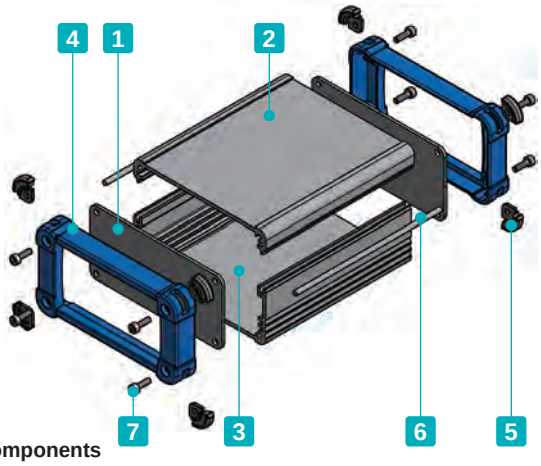

- Corner guards are designed to be both aesthetically pleasing, and impact resistant.
- Available in 73 different sizes and 8 different color combinations.
- EMC shielding is achieved by having the unfinished inner sides of the top/bottom covers and panels, as well as the fabric-over-foam gasket in contact with one another.

Included screws
EXPE7-□, 9-□ models : M2.5-8 x 8 pcs
EXPE12-□, 15-□ models : M3-10 x 8 pcs
EXPE20-□ models : M4-12 x 8 pcs
EXPE24-□, 30-□ models : M5-12 x 8 pcs
※Hexagonal wrench included.

Components

No.	Part name	Pcs	Material	Color / Finish
1	Panel	2	Aluminium A1100P	Metallic silver / Painted (Conductive inside)
2	Top cover	1	Extruded aluminium A6063S-T5	Metallic silver / Painted (Unfinished inside)
3	Bottom cover	1	Extruded aluminium A6063S-T5	Metallic silver / Painted (Unfinished inside)
4	Exterior frame	2	PC+ABS Flame-resistant	Black • Gray / Unpainted Indigo • Navy • Lime • Yellow • Orange • Red / Painted
5	Corner guard	8	Silicone	Dark gray • Black
6	Fabric-over-foam gasket	2	Conductive fabric : TPE	Metallic gray
7	Screw (Hexagonal)	8	Stainless steel	Unfinished

■ See page 217 ~ 220 for Top / Bottom cover dimensions

Color Type

Code	SB Silver / Black	SG Silver / Gray	SI Silver / Indigo	SN Silver / Navy
Color				
Code	**SL Silver / Lime**	**SY Silver / Yellow**	**SO Silver / Orange**	**SR Silver / Red**
Color				

EXPE dimensions

■ DXF/DWG/PDF/STP drawings available on our website.

※c = Top / Bottom cover length.

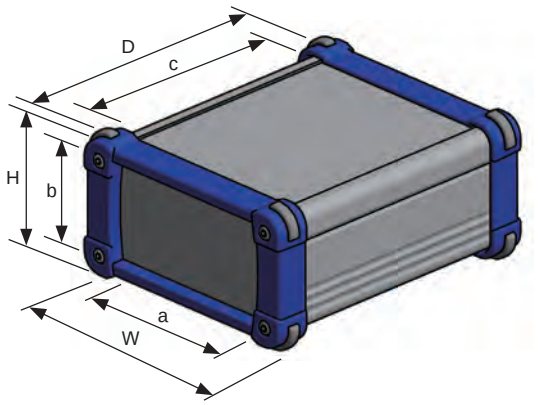

How to install shield gaskets

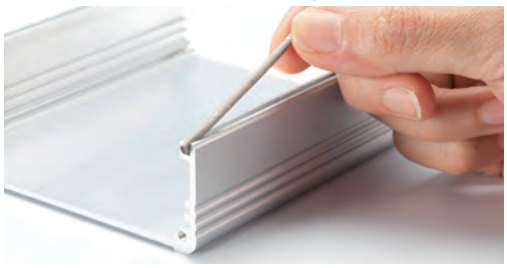

■ Insert fabric-over-foam gaskets into the joint-grooves on both sides of the bottom cover.

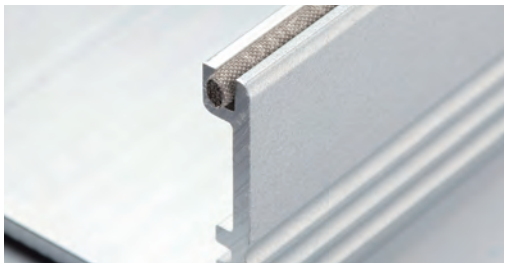

■ Ensure that a small portion of the fabric-over-foam gasket protrudes out in order to maintain connections with the end panels.

Product no. / Dimensions

■ Please suffix color code at the end of the product number.

Product no.	External dimensions			Internal dimensions		
	W	H	D	a	b	c
EXPE 7- 3- 6□□	69	34	60	46	19.6	46
EXPE 7- 3- 9□□	69	34	87	46	19.6	73
EXPE 7- 3-11□□	69	34	110	46	19.6	96
EXPE 7- 4- 6□□	69	44	60	46	29,6	46
EXPE 7- 4- 9□□	69	44	87	46	29,6	73
EXPE 7- 4-11□□	69	44	110	46	29,6	96
EXPE 7- 6- 6□□	69	59	60	46	44.6	46
EXPE 7- 6- 9□□	69	59	87	46	44.6	73
EXPE 7- 6-11□□	69	59	110	46	44.6	96
EXPE 9- 4- 7□□	89	39	70	66	24.6	56
EXPE 9- 4-10□□	89	39	100	66	24.6	86
EXPE 9- 4-13□□	89	39	130	66	24.6	116
EXPE 9- 5- 7□□	89	49	70	66	34.6	56
EXPE 9- 5-10□□	89	49	100	66	34.6	86
EXPE 9- 5-13□□	89	49	130	66	34.6	116
EXPE 9- 6- 7□□	89	64	70	66	49.6	56
EXPE 9- 6-10□□	89	64	100	66	49.6	86
EXPE 9- 6-13□□	89	64	130	66	49.6	116
EXPE12- 4- 9□□	116	41	90	88	24	74
EXPE12- 4-13□□	116	41	130	88	24	114
EXPE12- 4-18□□	116	41	176	88	24	160
EXPE12- 6- 9□□	116	56	90	88	39	74
EXPE12- 6-13□□	116	56	130	88	39	114
EXPE12- 6-18□□	116	56	176	88	39	160
EXPE12- 7- 9□□	116	71	90	88	54	74
EXPE12- 7-13□□	116	71	130	88	54	114
EXPE12- 7-18□□	116	71	176	88	54	160
EXPE15- 5-11□□	151	46	110	106.8	29	93
EXPE15- 5-15□□	151	46	150	106.8	29	133
EXPE15- 5-20□□	151	46	200	106.8	29	183
EXPE15- 6-11□□	151	61	110	106.8	44	93
EXPE15- 6-15□□	151	61	150	106.8	44	133
EXPE15- 6-20□□	151	61	200	106.8	44	183
EXPE15- 8-11□□	151	81	110	106.8	64	93
EXPE15- 8-15□□	151	81	150	106.8	64	133
EXPE15- 8-20□□	151	81	200	106.8	64	183
EXPE15-10-11□□	151	101	110	106.8	84	93
EXPE15-10-15□□	151	101	150	106.8	84	133
EXPE15-10-20□□	151	101	200	106.8	84	183

■ Custom length is available

Product no.	External dimensions			Internal dimensions		
	W	H	D	a	b	c
EXPE20- 6-14□□	199	56	140	131	35	120
EXPE20- 6-19□□	199	56	192	131	35	172
EXPE20- 6-25□□	199	56	245	131	35	225
EXPE20- 6-30□□	199	56	300	131	35	280
EXPE20- 7-14□□	199	74	140	131	53	120
EXPE20- 7-19□□	199	74	192	131	53	172
EXPE20- 7-25□□	199	74	245	131	53	225
EXPE20- 7-30□□	199	74	300	131	53	280
EXPE20- 9-14□□	199	94	140	131	73	120
EXPE20- 9-19□□	199	94	192	131	73	172
EXPE20- 9-25□□	199	94	245	131	73	225
EXPE20- 9-30□□	199	94	300	131	73	280
EXPE20-12-14□□	199	119	140	131	98	120
EXPE20-12-19□□	199	119	192	131	98	172
EXPE20-12-25□□	199	119	245	131	98	225
EXPE20-12-30□□	199	119	300	131	98	280
EXPE24- 6-17□□	244	64	170	176	43	147
EXPE24- 6-23□□	244	64	230	176	43	207
EXPE24- 6-29□□	244	64	290	176	43	267
EXPE24- 6-35□□	244	64	350	176	43	327
EXPE24- 9-17□□	244	89	170	176	68	147
EXPE24- 9-23□□	244	89	230	176	68	207
EXPE24- 9-29□□	244	89	290	176	68	267
EXPE24- 9-35□□	244	89	350	176	68	327
EXPE24-11-17□□	244	114	170	176	93	147
EXPE24-11-23□□	244	114	230	176	93	207
EXPE24-11-29□□	244	114	290	176	93	267
EXPE24-11-35□□	244	114	350	176	93	327
NEW EXPE30- 9-25□□	300	90	250	230	68	228
NEW EXPE30- 9-32□□	300	90	320	230	68	298
NEW EXPE30- 9-40□□	300	90	400	230	68	378
NEW EXPE30-14-25□□	300	140	250	230	118	228
NEW EXPE30-14-32□□	300	140	320	230	118	298
NEW EXPE30-14-40□□	300	140	400	230	118	378

Following models are suitable for Mini-ITX board size.
EXPE20-7-19□□
EXPE20-9-19□□
EXPE20-12-19□□

EXEF series FLANGED ALUMINIUM EMC SHIELDED CASE

EMC Shielding Effects

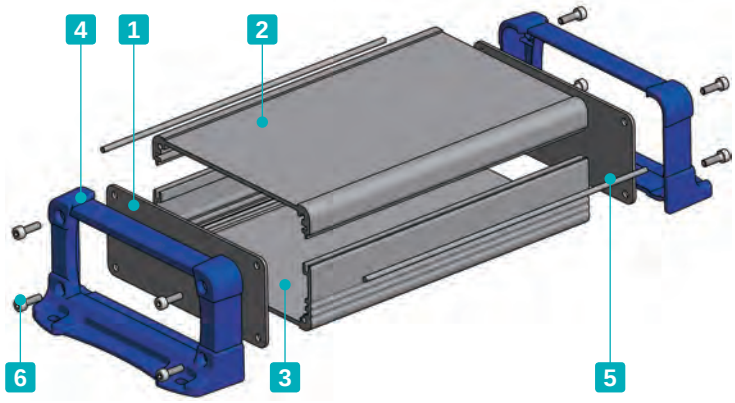

- EMC shielding is achieved by having the unfinished inner sides of the top/bottom covers and panels, as well as the fabric-over-foam gasket in contact with one another.
- Equipped with flanged frame for easy wall mounting.
- Available in 67 different sizes and 3 different color combinations.

Included screws
EXEF7-□, 9-□ models : M2.5-8 x 8 pcs
EXEF11-□, 15-□ models : M3-10 x 8 pcs
EXEF20-□ models : M4-12 x 8 pcs
EXEF24-□ models : M5-12 x 8 pcs
※Hexagonal wrench included.

Components

No.	Part name	Pcs	Material	Color / Finish
1	Panel	2	Aluminium A1100P	Metallic silver / Painted (Conductive inside)
2	Top cover	1	Extruded aluminium A6063S-T5	Metallic silver / Painted (Unfinished inside)
3	Bottom cover	1	Extruded aluminium A6063S-T5	Metallic silver / Painted (Unfinished inside)
4	Flanged frame	2	PC+ABS Flame-resistant	Black • Gray / Unpainted Navy / Painted
5	Fabric-over-foam gasket	2	Conductive fabric : TPE	Metallic gray
6	Screw (Hexagonal)	8	Stainless steel	Unfinished

■ See page 217 ~ 220 for Top / Bottom cover dimensions

Color Type

Code	SB Silver / Black	SG Silver / Gray	SN Silver / Navy
Color			

EXEF dimensions

※c = Top / Bottom cover length.

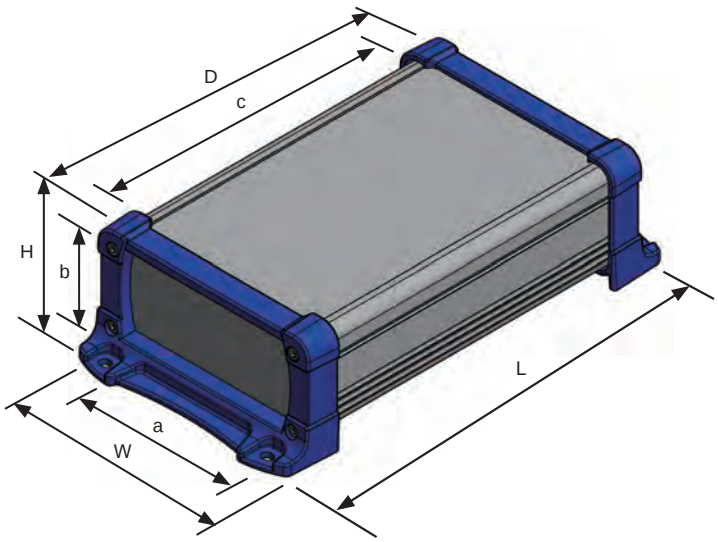

■ DXF/DWG/PDF/STP drawings available on our website.

How to install shield gaskets

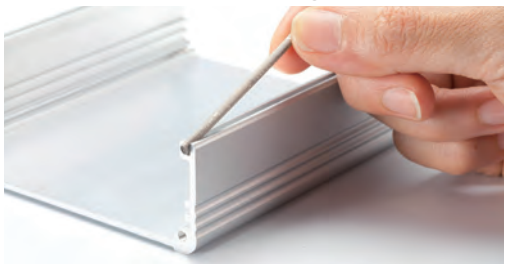

■ Insert fabric-over-foam gaskets into the joint-grooves on both sides of the bottom cover.

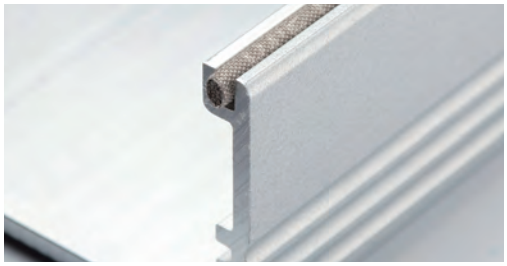

■ Ensure that a small portion of the fabric-over-foam gaskets protrude out in order to maintain connections with the end panels.

Product no. / Dimensions

■ Please suffix color code at the end of the product number.

Product no.	External dimensions				Internal dimensions		
	W	H	D	L	a	b	c
EXEF 7- 3- 6□□	66	34	60	84	46	19.6	46
EXEF 7- 3- 9□□	66	34	87	111	46	19.6	73
EXEF 7- 3-11□□	66	34	110	134	46	19.6	96
EXEF 7- 4- 6□□	66	44	60	84	46	29.6	46
EXEF 7- 4- 9□□	66	44	87	111	46	29.6	73
EXEF 7- 4-11□□	66	44	110	134	46	29.6	96
EXEF 7- 6- 6□□	66	59	60	84	46	44.6	46
EXEF 7- 6- 9□□	66	59	87	111	46	44.6	73
EXEF 7- 6-11□□	66	59	110	134	46	44.6	96
EXEF 9- 4- 7□□	86	39	70	95.8	66	24.6	56
EXEF 9- 4-10□□	86	39	100	125.8	66	24.6	86
EXEF 9- 4-13□□	86	39	130	155.8	66	24.6	116
EXEF 9- 5- 7□□	86	49	70	95.8	66	34.6	56
EXEF 9- 5-10□□	86	49	100	125.8	66	34.6	86
EXEF 9- 5-13□□	86	49	130	155.8	66	34.6	116
EXEF 9- 6- 7□□	86	64	70	95.8	66	49.6	56
EXEF 9- 6-10□□	86	64	100	125.8	66	49.6	86
EXEF 9- 6-13□□	86	64	130	155.8	66	49.6	116
EXEF11- 4- 9□□	113	41.5	90	121.8	88	24	74
EXEF11- 4-13□□	113	41.5	130	161.8	88	24	114
EXEF11- 4-18□□	113	41.5	176	207.8	88	24	160
EXEF11- 6- 9□□	113	56.5	90	121.8	88	39	74
EXEF11- 6-13□□	113	56.5	130	161.8	88	39	114
EXEF11- 6-18□□	113	56.5	176	207.8	88	39	160
EXEF11- 7- 9□□	113	71.5	90	121.8	88	54	74
EXEF11- 7-13□□	113	71.5	130	161.8	88	54	114
EXEF11- 7-18□□	113	71.5	176	207.8	88	54	160
EXEF15- 5-11□□	148	47	110	149.2	106.8	29	93
EXEF15- 5-15□□	148	47	150	189.2	106.8	29	133
EXEF15- 5-20□□	148	47	200	239.2	106.8	29	183
EXEF15- 6-11□□	148	62	110	149.2	106.8	44	93
EXEF15- 6-15□□	148	62	150	189.2	106.8	44	133
EXEF15- 6-20□□	148	62	200	239.2	106.8	44	183
EXEF15- 8-11□□	148	82	110	149.2	106.8	64	93
EXEF15- 8-15□□	148	82	150	189.2	106.8	64	133
EXEF15- 8-20□□	148	82	200	239.2	106.8	64	183
EXEF15-10-11□□	148	102	110	149.2	106.8	84	93
EXEF15-10-15□□	148	102	150	189.2	106.8	84	133
EXEF15-10-20□□	148	102	200	239.2	106.8	84	183

Product no.	External dimensions				Internal dimensions		
	W	H	D	L	a	b	c
EXEF20- 6-14□□	195	57	140	188.6	131	35	120
EXEF20- 6-19□□	195	57	192	240.6	131	35	172
EXEF20- 6-25□□	195	57	245	293.6	131	35	225
EXEF20- 6-30□□	195	57	300	348.6	131	35	280
EXEF20- 8-14□□	195	75	140	188.6	131	53	120
EXEF20- 8-19□□	195	75	192	240.6	131	53	172
EXEF20- 8-25□□	195	75	245	293.6	131	53	225
EXEF20- 8-30□□	195	75	300	348.6	131	53	280
EXEF20-10-14□□	195	95	140	188.6	131	73	120
EXEF20-10-19□□	195	95	192	240.6	131	73	172
EXEF20-10-25□□	195	95	245	293.6	131	73	225
EXEF20-10-30□□	195	95	300	348.6	131	73	280
EXEF20-12-14□□	195	120	140	188.6	131	98	120
EXEF20-12-19□□	195	120	192	240.6	131	98	172
EXEF20-12-25□□	195	120	245	293.6	131	98	225
EXEF20-12-30□□	195	120	300	348.6	131	98	280
EXEF24- 7-17□□	240	65	170	218.6	176	43	147
EXEF24- 7-23□□	240	65	230	278.6	176	43	207
EXEF24- 7-29□□	240	65	290	338.6	176	43	267
EXEF24- 7-35□□	240	65	350	398.6	176	43	327
EXEF24- 9-17□□	240	90	170	218.6	176	68	147
EXEF24- 9-23□□	240	90	230	278.6	176	68	207
EXEF24- 9-29□□	240	90	290	338.6	176	68	267
EXEF24- 9-35□□	240	90	350	398.6	176	68	327
EXEF24-12-17□□	240	115	170	218.6	176	93	147
EXEF24-12-23□□	240	115	230	278.6	176	93	207
EXEF24-12-29□□	240	115	290	338.6	176	93	267
EXEF24-12-35□□	240	115	350	398.6	176	93	327

Following models are suitable for Mini-ITX board size.

EXEF20-8-19□□

EXEF20-10-19□□

EXEF20-12-19□□

Cross-section view of top & bottom covers

■ DXF/DWG/PDF/STP drawings available on our website.

EXP • EXPE • EXW • EXPF • EXEF • EXWF7-3-□
EX6-3-□

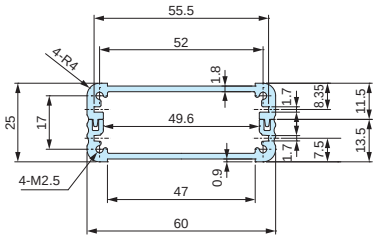

EXP • EXPE • EXW • EXPF • EXEF • EXWF7-4-□
EX6-4-□

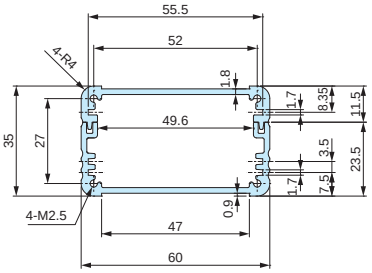

EXP • EXPE • EXW • EXPF • EXEF • EXWF7-6-□
EX6-5-□

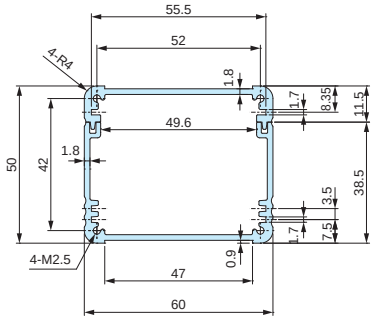

EXP • EXPE • EXW • EXPF • EXEF • EXWF9-4-□
EX8-3-□

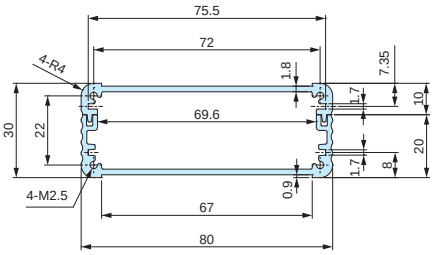

EXP • EXPE • EXW • EXPF • EXEF • EXWF9-5-□
EX8-4-□

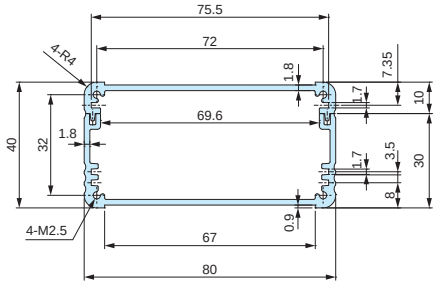

EXP • EXPE • EXW • EXPF • EXEF • EXWF9-6-□
EX8-6-□

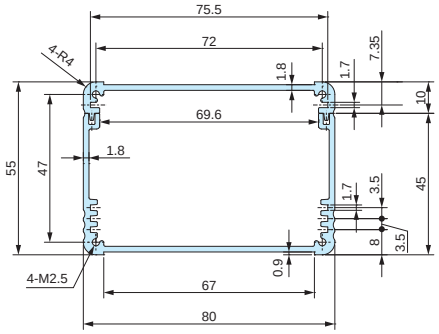

EXP • EXPE • EXW12-4-□
EXPF • EXEF • EXWF11-4-□
EX11-3-□

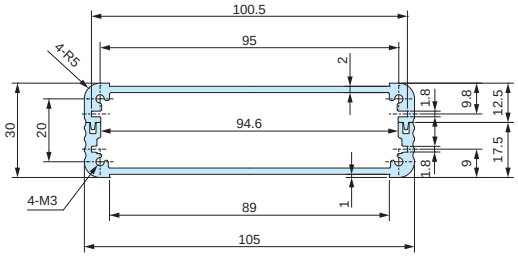

EXP • EXPE • EXW12-6-□
EXPF • EXEF • EXWF11-6-□
EX11-5-□

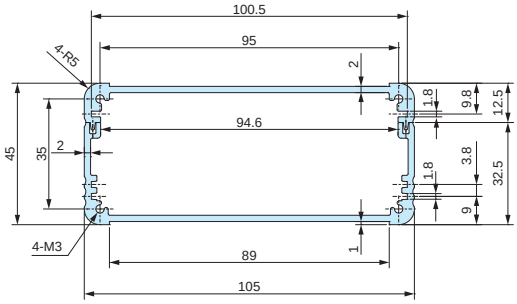

EXP • EXPE • EXW12-7-□
EXPF • EXEF • EXWF11-7-□
EX11-6-□

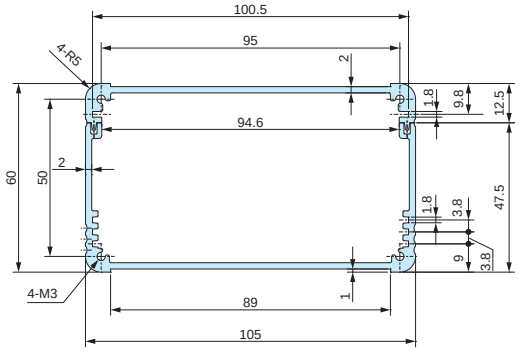

EXP • EXPE • EXW • EXPF • EXEF • EXWF15-5-□
EX14-4-□

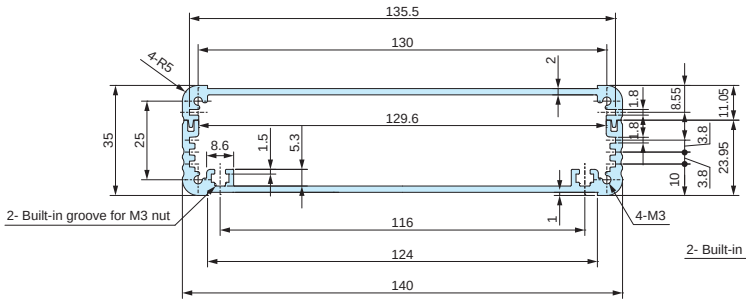

EXP • EXPE • EXW • EXPF • EXEF • EXWF15-6-□
EX14-5-□

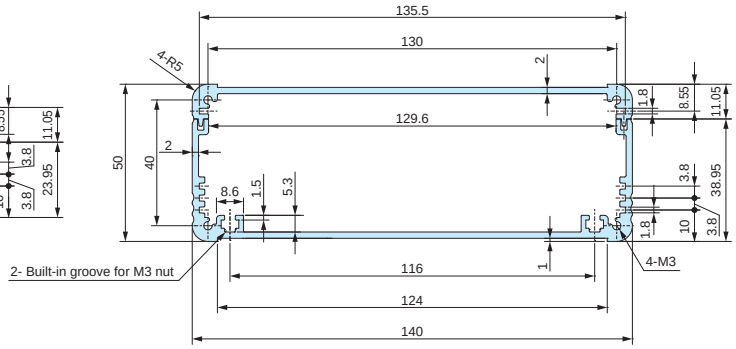

EXP • EXPE • EXW • EXPF • EXEF • EXWF15-8-□
EX14-7-□

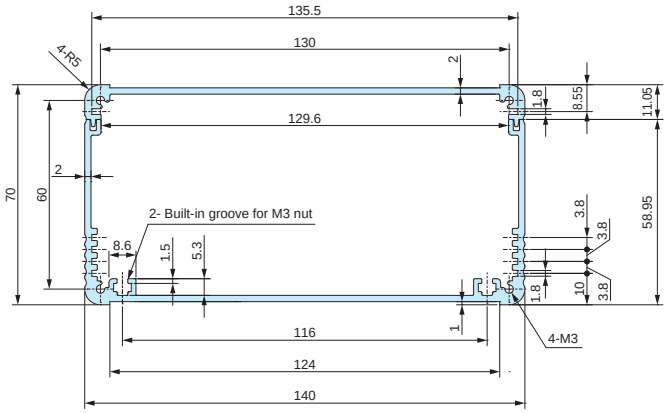

EXP • EXPE • EXW • EXPF • EXEF • EXWF15-10-□
EX14-9-□

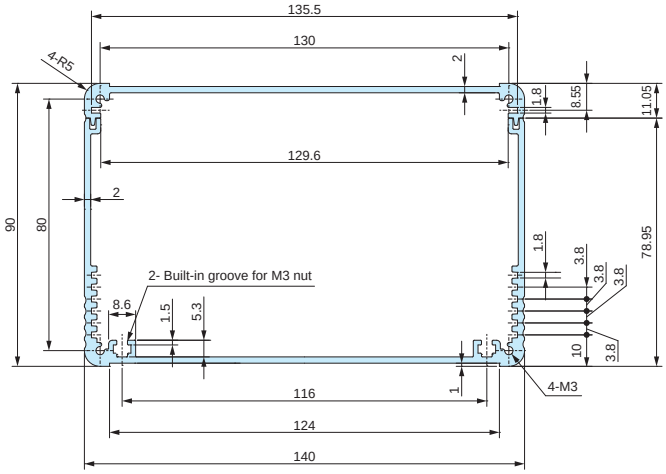

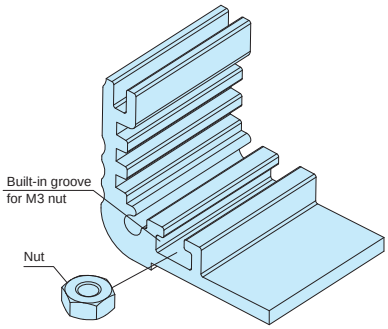

■ Optional sliding nut is available to be used for width 140mm or larger bottom covers.
See page 221 for further details.

Cross-section view of top & bottom covers

■ DXF/DWG/PDF/STP drawings available on our website.

EXPT • EXP • EXPE • EXPF • EXEF • EXWF20-6-□
EX19-4-□

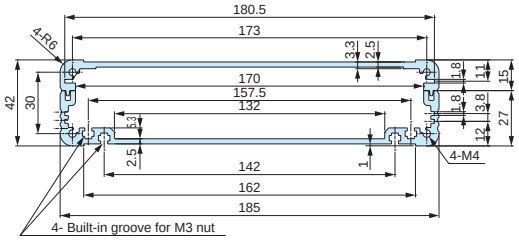

EXPT • EXP • EXPE20-7-□
EXPF • EXEF • EXWF20-8-□
EX19-6-□

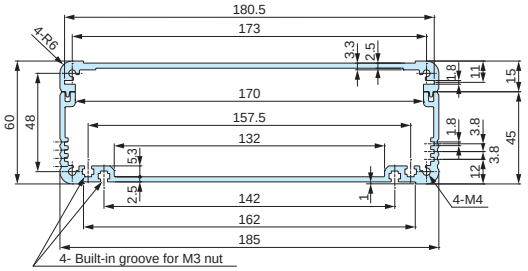

EXPT • EXP • EXPE20-9-□
EXPF • EXEF • EXWF20-10-□
EX19-8-□

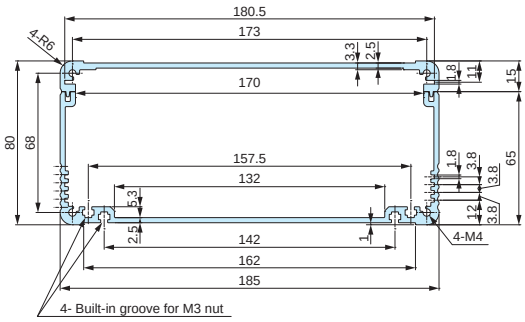

EXPT • EXP • EXPE • EXPF • EXEF • EXWF20-12-□
EX19-11-□

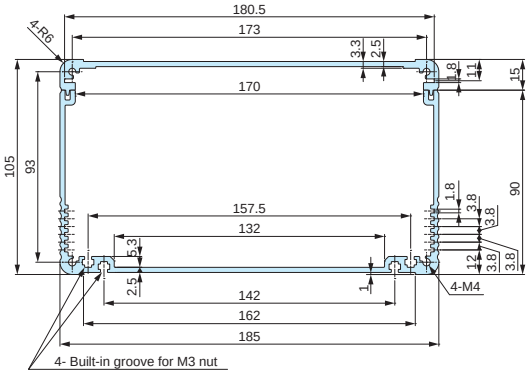

EXPT • EXP • EXPE24-6-□
EXPF • EXEF • EXWF24-7-□
EX23-5-□

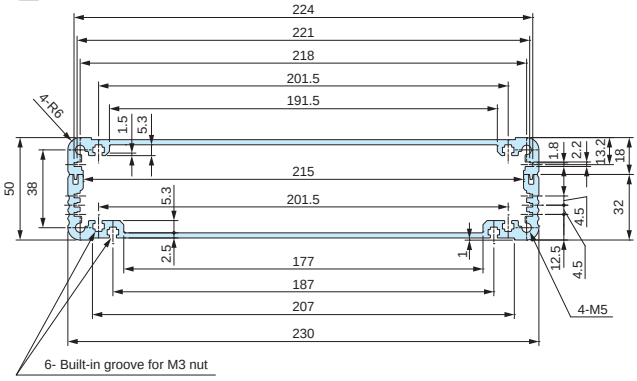

EXPT • EXP • EXPE • EXPF • EXEF • EXWF24-9-□
EX23-8-□

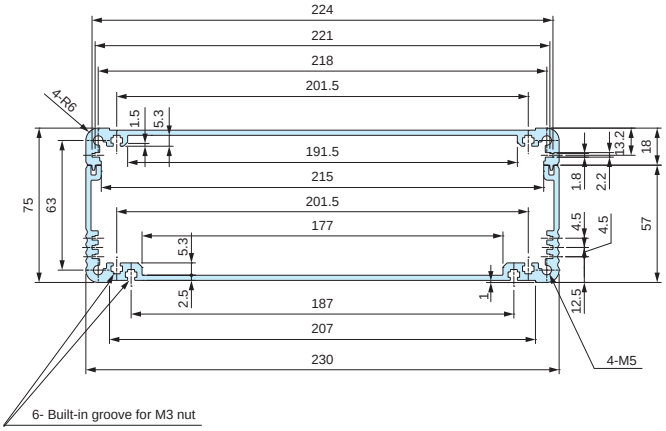

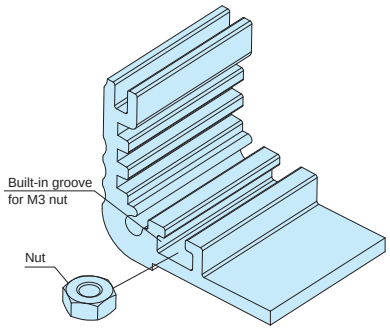

■ Optional sliding nut is available to be used for width 140mm or larger bottom covers.

See page 221 for further details.

EXPT • EXP • EXPE24-11-□
EXPF • EXEF • EXWF24-12-□
EX23-10-□

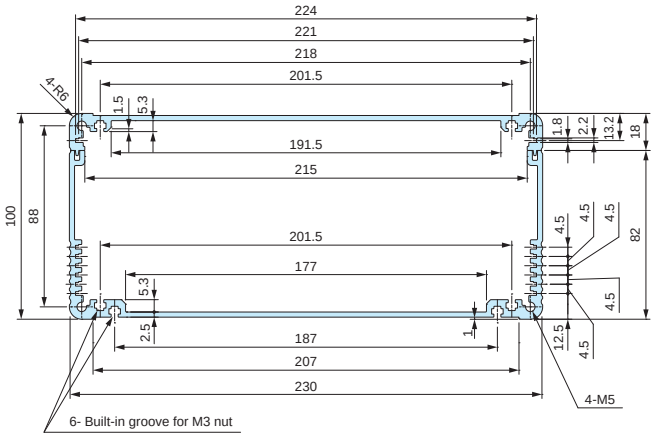

EXPT • EXP • EXPE • EXPF • EXEF • EXWF30-9-□
EX29-8-□

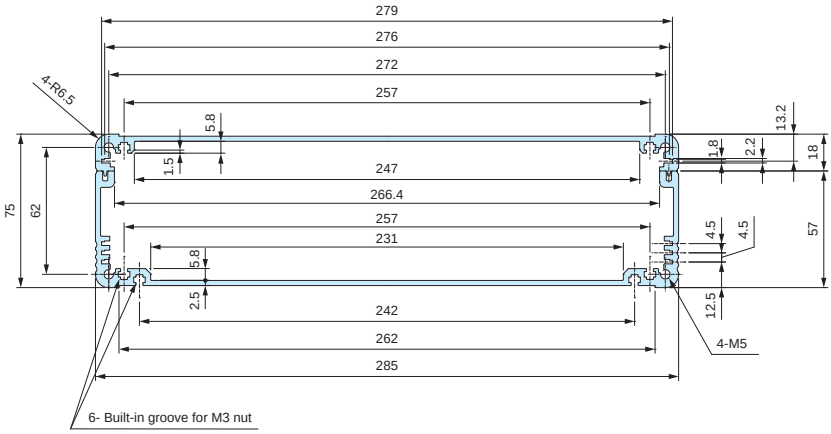

EXPT • EXP • EXPE • EXPF • EXEF • EXWF30-14-□
EX29-13-□

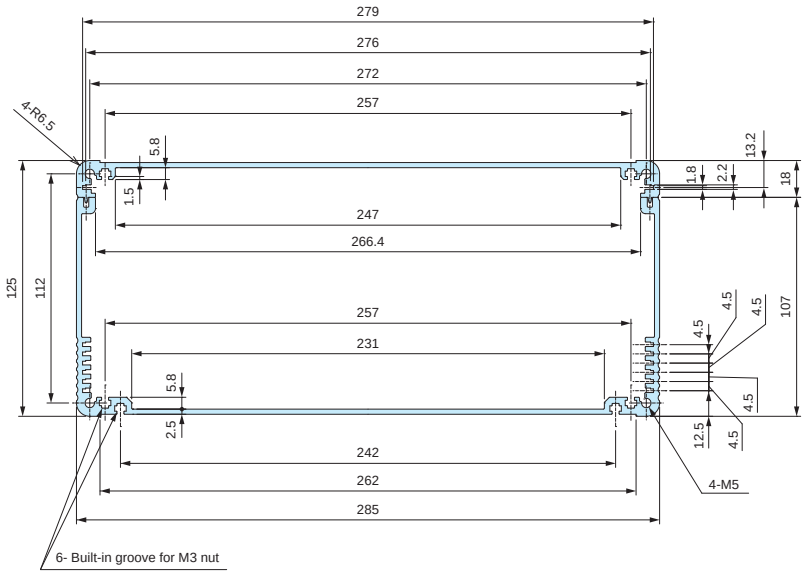

MT-3N SLIDING NUT for EX□ • EXH□

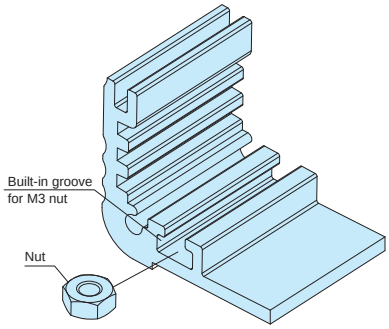

MT-3N dimensions

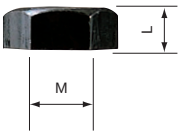

Product no. / Dimensions

Product no.	M	L	Material	Finish	Pack of
MT-3N	3	2.4	Steel	Black trivalent chromate	50

■ Sliding nut can be used on all EXPT • EXP • EXPE • EXW • EXPF • EXEF • EXWF • EX models with width 140mm or larger bottom covers, as well as with width 230mm and 285mm top covers, on all EXH • EXHE • EXHF • EXHFE models with width 140mm or larger bottom covers, as well as all heat-sink top covers.

EXEG series EMC SHIELDING FABRIC-OVER-FOAM GASKET

■ Exclusive EMC shielding fabric-over-foam gasket for EXPE • EXEF • EXHE • EXHFE models.

Suitable Models

Product no.	Suitable models
EXEG-2.5	EXPE7-□, 9-□, 12-□, 15-□, EXEF7-□, 9-□, 11-□, 15-□ EXHE8-□, 11-□, 14-□, EXHFE8-□, 11-□, 14-□
EXEG-3.2	EXPE20-□, 24-□, 30-□, EXEF20-□, 24-□ EXHE19-□, 23-□, 29-□, EXHFE19-□, 23-□, 29-□

Product no. / Dimensions

Product no.	Dimensions	Pack of
EXEG-2.5	Φ2.5×500mm	1
EXEG-3.2	Φ3.2×500mm	1

Length tolerance = +/- 10%

EMC Shielding Effects

■ Material / Color : Conductive fiber • TPE / Metallic gray

EX series APPLICATION EXAMPLE

Tube Amplifier

Product by MJ Audio Technology

IoT Relay Module

Product by Bunnyhop (Japan)

Premain Power Amplifier

Product by AY-densi (Japan)

USB Edge Node

Product by SHINWA (Japan)

TLW series TILT LEG

APPLICATION EXAMPLE

- Double shot injection molded feet with soft and well-designed rounded shape.
- Non-slip design with Elastomer (TPE) pad.
- Available in 3 different color patterns (2 color patterns for TLW-70 models).
- TLW-70E models are exclusively for use with width 185mm or larger bottom covers of EXP • EXPE • EXW • EX • EXH • EXHE aluminium enclosures.

Technical Data
Max load : 7kg

Components

No.	Part name	Pcs	Material	Color / Finish
1	Front foot	2	PC + ABS UL94V-0 • TPE	Black & Black • Navy & Gray • Light gray & Gray
2	Rear foot	2	PC + ABS UL94V-0 • TPE	Black & Black • Navy & Gray • Light gray & Gray
–	Screw	4	Steel M3-8 pan head	Black trivalent chromate
–	Nut	4	Steel M3	Black trivalent chromate

TLW dimensions

- DXF/DWG/PDF/STP drawings available on our website.

Mounting hole (Front)

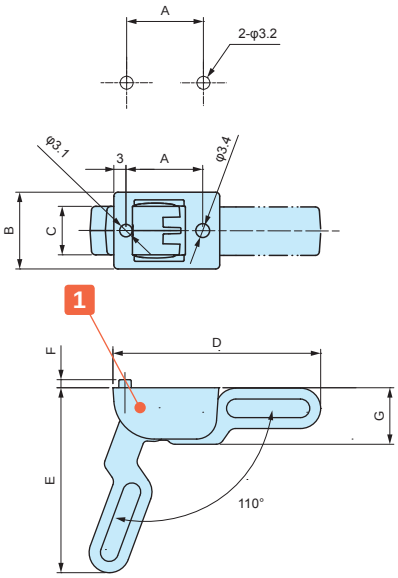

Mounting hole (Rear)

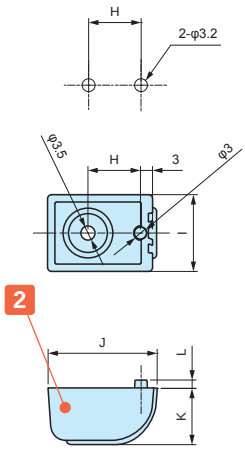

- TLW-70E□□ models are for installation (with M3 nut) into the built-in grooves on bottom-covers of EXP • EXPE 20-6, EXH • EXHE • EX 19-4 or larger models.
- Hole milling is required to install TLW-46□□ and TLW-70□□ models.
- Max installation panel thickness : t = 3.5mm

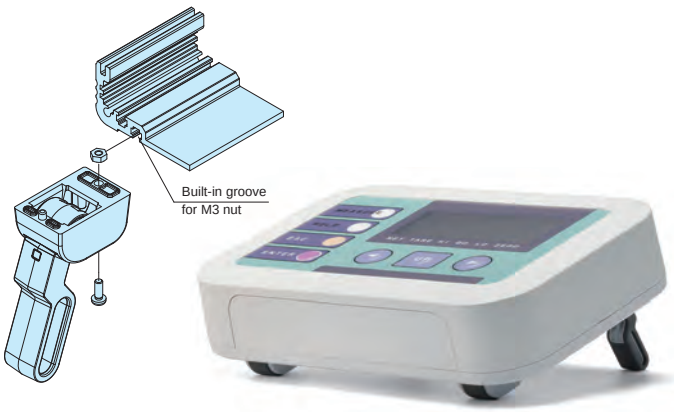

Product no. / Dimensions

Product no.	A	B	C	D	E	F	G	H	I	J	K	L	Color (plastic)	Color (TPE)	Weight (g)
TLW-46BB	19	19	12	51.2	45.9	2	14	13	19	27	14	2	Black	Black	23
TLW46-NG	19	19	12	51.2	45.9	2	14	13	19	27	14	2	Navy	Gray	23
TLW-46LG	19	19	12	51.2	45.9	2	14	13	19	27	14	2	Light gray	Gray	23
TLW-70EBB	–	25	16	75.4	69	3	21.5	–	25	39	21.5	3	Black	Black	59
TLW-70ENG	–	25	16	75.4	69	3	21.5	–	25	39	21.5	3	Navy	Gray	59
TLW-70ELG	–	25	16	75.4	69	3	21.5	–	25	39	21.5	3	Light gray	Gray	59
TLW-70BB	30	25	16	75.4	69	2	21.5	20	25	39	21.5	2	Black	Black	59
TLW-70LG	30	25	16	75.4	69	2	21.5	20	25	39	21.5	2	Light gray	Gray	59

AW • AWN • AWP series

IP68 ALUMINIUM ENCLOSURE

AW • AWN • AWP series are highly functional aluminium enclosures which are IP68 (24 hours / 1m depth immersion) rated with heat dissipating heat-sink fins.
34 sizes available. Standard, Flanged, Shielding, and Silicone protector types are available.
Suitable for LED power supply, industrial camera, controller or measuring instrument where waterproof and cooling performance are crucial.

APPLICATION EXAMPLE

Waterproof Boating Network Modular System

Product by Dockmate (Belgium)

GNSS Receiver

Product by KomNavRus

Heavy Duty Portable Hardness Tester

Product by DEMEQ (Argentina)

LoRa Wan Gateway

Product by ProEsys (Italy)

Radio-Control Electronic Exploder

Product by CODETEL (France)

Pin Hole Detector

Product by SANKO ECECTRONIC LABORATORY (Japan)

FBG Data Logger

Product by NAGANO KEIKI (Japan)

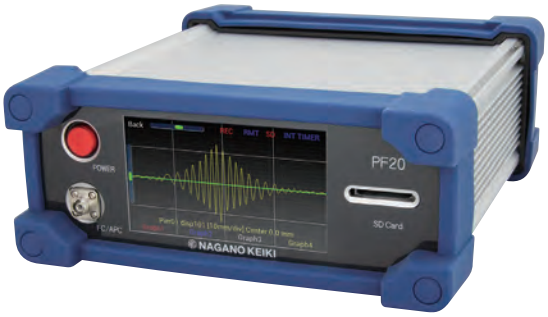

Data Logger with 3G Modem Report Function

Product by mSolution (Hong Kong)

Custom Length Available

Flexible frame length from 50mm to 700mm in 1mm intervals.

No minimum order quantity and short lead time for small quantity order.

See our website for further details.

AW series IP68 FLANGED ALUMINIUM ENCLOSURE

EMC Shielding Effects

IP68

- IP68 and heat dissipation enclosure. Designed with flanged end panels.
- PCB or chassis is mounted by sliding it horizontally into an inner-grooved body frame.
- Designed for a tough environment where waterproof and heat countermeasures are required.
- Suitable for outdoor use such as LED power supply and junction boxes.

Technical Data

Protection class: IP68 (24 hours/1m depth)
Operating temperature: -40°C ~ +105°C
Recommended torque: 1.0N • m

Normal N type Components

No.	Part name	Pcs	Material	Color / Finish
1	Flanged end panel	2	Diecast aluminium ADC12	Metallic gray • Black / Powder coated
2	Body frame	1	Extruded aluminium A6063S-T5	Silver • Black / Anodized with clear coating
3	Gasket	2	Silicone	Black
4	Screw	8	Stainless steel	Unfinished

EMC Shielded E type Components

No.	Part name	Pcs	Material	Color / Finish
1	Flanged end panel	2	Diecast aluminium ADC12	Silver • Black / Painted (Unfinished inside)
2	Body frame	1	Extruded aluminium A6063S-T5	Silver • Black / Anodized with clear coating
3	Gasket	2	Conductive silicone	Black
4	Screw	8	Stainless steel	Unfinished

Normal - N type

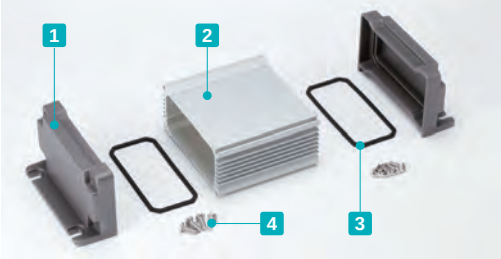

Color type

Metallic gray / Silver

N G S

Black / Silver

N B S

Black / Black

N B B

EMC Shielded - E type

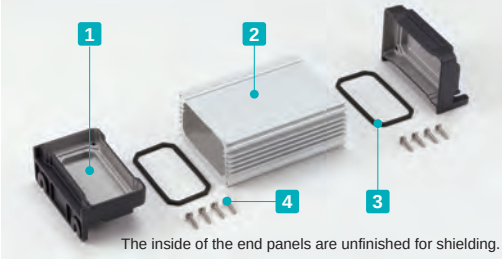

The inside of the end panels are unfinished for shielding.

Color type

Silver / Silver

E S S

Black / Silver

E B S

Black / Black

E B B

AW dimensions

■ DXF/DWG/PDF/STP drawings available on our website.

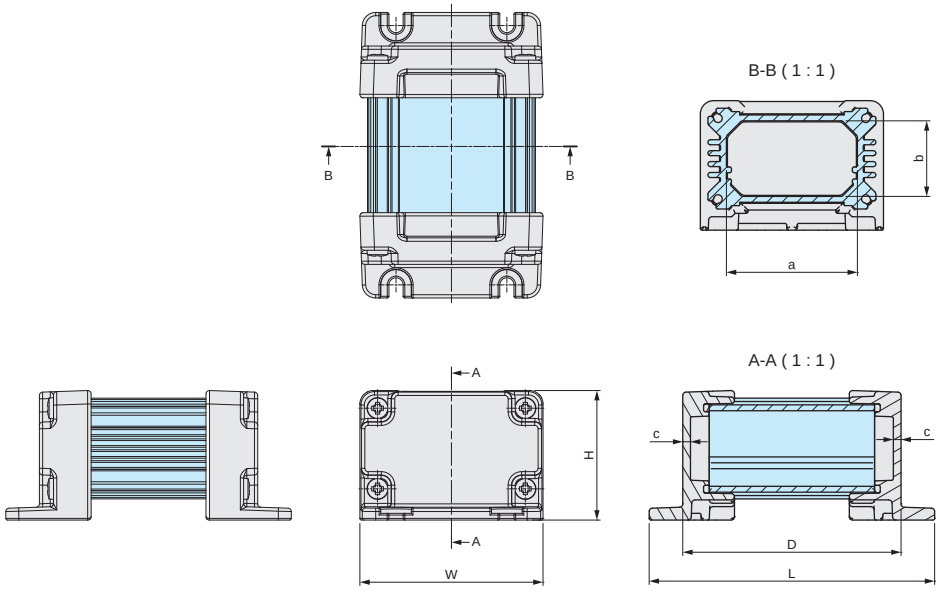

See page 235 and 236 for detailed body frame dimensions.

Product no. / Dimensions

■ Please suffix color code at the end of the product number.

Product no.	W	H	D	L	a	b	c	Weight (g)
AW 5-4- 7□□□	54.6	38.6	65	85	39	22.5	2.3	128.5
AW 5-4- 9□□□	54.6	38.6	85	105	39	22.5	2.3	149
AW 5-4-11□□□	54.6	38.6	110	130	39	22.5	2.3	175
AW 5-4-14□□□	54.6	38.6	135	155	39	22.5	2.3	201.5
AW 7-7- 8□□□	65.8	70.8	80	106	47	51	2.5	294.5
AW 7-7-11□□□	65.8	70.8	110	136	47	51	2.5	350
AW 7-7-15□□□	65.8	70.8	150	176	47	51	2.5	424.5
AW 7-7-20□□□	65.8	70.8	200	226	47	51	2.5	517
AW 7-7-25□□□	65.8	70.8	250	276	47	51	2.5	610
AW 8-5- 9□□□	80.8	50.8	90	116	62	31	2.5	289.5
AW 8-5-12□□□	80.8	50.8	115	141	62	31	2.5	330.5
AW 8-5-14□□□	80.8	50.8	140	166	62	31	2.5	372
AW 8-5-18□□□	80.8	50.8	175	201	62	31	2.5	429.5
AW 9-9-10□□□	86.3	92	100	129	66.5	66.5	3	560.5
AW 9-9-13□□□	86.3	92	125	154	66.5	66.5	3	633.5
AW 9-9-17□□□	86.3	92	170	199	66.5	66.5	3	764.5
AW 9-9-22□□□	86.3	92	220	249	66.5	66.5	3	910.5
AW 9-9-28□□□	86.3	92	275	304	66.5	66.5	3	1,071
AW11-6-11□□□	106.3	62	110	139	86.5	36.5	3	526.5
AW11-6-15□□□	106.3	62	150	179	86.5	36.5	3	625
AW11-6-19□□□	106.3	62	190	219	86.5	36.5	3	723.5
AW11-6-24□□□	106.3	62	240	269	86.5	36.5	3	847
AW12-8-11□□□	120	77	105	134	100.2	51.5	3	614.5
AW12-8-14□□□	120	77	140	169	100.2	51.5	3	720.5
AW12-8-17□□□	120	77	179.5	208.5	100.2	51.5	3	840
AW12-8-22□□□	120	77	215	244	100.2	51.5	3	947.5
AW16-9-14□□□	156.3	87	135	164	136.5	61.5	3	945.5
AW16-9-18□□□	156.3	87	175	204	136.5	61.5	3	1,092.5
AW16-9-23□□□	156.3	87	225	254	136.5	61.5	3	1,275.5
AW16-9-28□□□	156.3	87	275	304	136.5	61.5	3	1,459
AW21-9-17□□□	206.3	87	170	199	186.5	61.5	3	1,303
AW21-9-21□□□	206.3	87	210	239	186.5	61.5	3	1,473.5
AW21-9-26□□□	206.3	87	260	289	186.5	61.5	3	1,686.5
AW21-9-31□□□	206.3	87	310	339	186.5	61.5	3	1,899.5

■ Custom length is available.

Accessories (Optional parts)

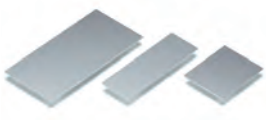

Mounting plate AWC series
See page 238

Hexagon socket head screw HCS series
See page 238

Cable gland
See page 333 ~ 340

Pole mounting bracket SSK series
See website

Protective vent PMF series
See page 325 ~ 326

AWN series IP68 HEAT-SINK ALUMINIUM ENCLOSURE

EMC Shielding Effects

IP68

- IP68 and heat dissipation enclosure design. Selectable in both Normal or EMC Shielded type.
- The extruded aluminium frame and diecast aluminium panels makes it extremely suitable to be used in harsh environments where waterproofing and heat dissipation is essential.
- PCB or chassis can be mounted by sliding it horizontally into inner-grooved body frame.
- Suitable for measuring instruments, industrial control box, and industrial camera housing, among others.

Technical Data

Protection class: IP68 (24 hours/1m depth)
Operating temperature: -40°C ~ +105°C
Recommended torque: 1.0N • m

Normal N type Components

No.	Part name	Pcs	Material	Color / Finish
1	End panel	2	Diecast aluminium ADC12	Metallic gray • Black / Powder coated
2	Body frame	1	Extruded aluminium A6063S-T5	Silver • Black / Anodized with clear coating
3	Gasket	2	Silicone	Black
4	Screw	8	Stainless steel	Unfinished
5	Rubber feet	4	Polyurethane	Black

EMC Shielded E type Components

No.	Part name	Pcs	Material	Color / Finish
1	End panel	2	Diecast aluminium ADC12	Silver • Black / Painted (Unfinished inside)
2	Body frame	1	Extruded aluminium A6063S-T5	Silver • Black / Anodized with clear coating
3	Gasket	2	Conductive silicone	Black
4	Screw	8	Stainless steel	Unfinished
5	Rubber feet	4	Polyurethane	Black

Normal - N type

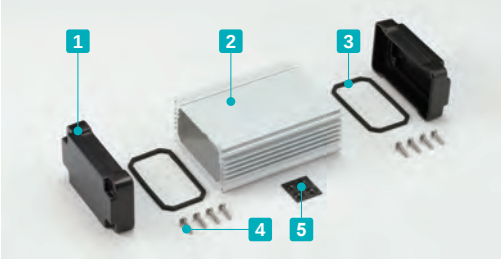

Color type

Metallic gray / Silver

N G S

Black / Silver

N B S

Black / Black

N B B

EMC Shielded - E type

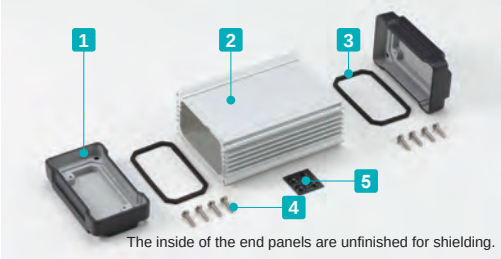

The inside of the end panels are unfinished for shielding.

Color type

Silver / Silver

E S S

Black / Silver

E B S

Black / Black

E B B

AWN dimensions

■ DXF/DWG/PDF/STP drawings available on our website.

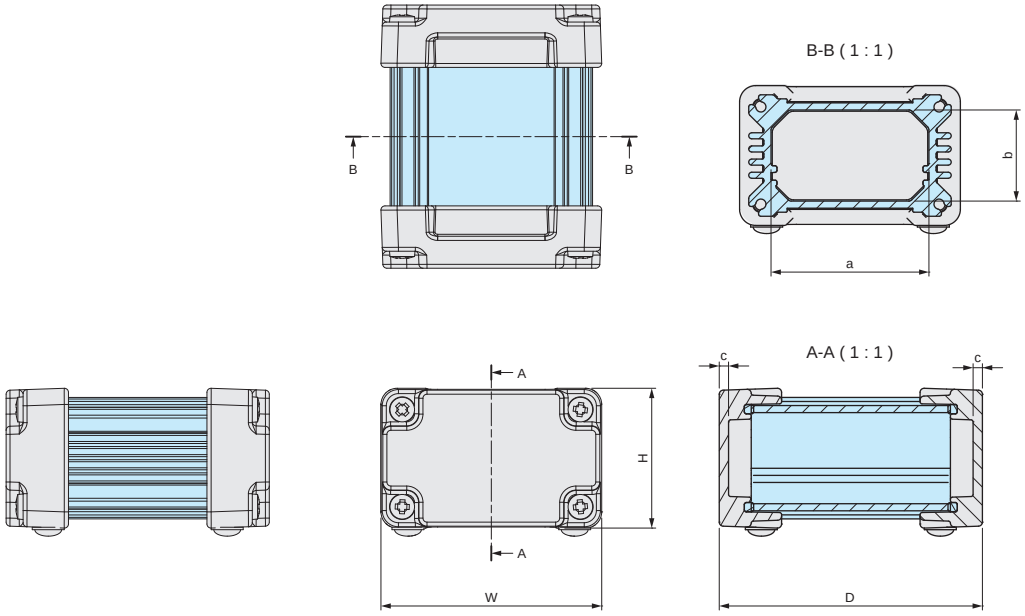

See page 235 and 236 for detailed body frame dimensions.

Product no. / Dimensions

■ Please suffix color code at the end of the product number.

Product no.	W	H	D	a	b	c	Weight (g)
AWN 5-4- 7□□□	54.6	34.6	65	39	22.5	2.3	118.5
AWN 5-4- 9□□□	54.6	34.6	85	39	22.5	2.3	139
AWN 5-4-11□□□	54.6	34.6	110	39	22.5	2.3	165
AWN 5-4-14□□□	54.6	34.6	135	39	22.5	2.3	191.5
AWN 7-7- 8□□□	65.8	65.8	80	47	51	2.5	272.5
AWN 7-7-11□□□	65.8	65.8	110	47	51	2.5	328
AWN 7-7-15□□□	65.8	65.8	150	47	51	2.5	402.5
AWN 7-7-20□□□	65.8	65.8	200	47	51	2.5	495
AWN 7-7-25□□□	65.8	65.8	250	47	51	2.5	588
AWN 8-5- 9□□□	80.8	45.8	90	62	31	2.5	259.5
AWN 8-5-12□□□	80.8	45.8	115	62	31	2.5	300.5
AWN 8-5-14□□□	80.8	45.8	140	62	31	2.5	342
AWN 8-5-18□□□	80.8	45.8	175	62	31	2.5	399.5
AWN 9-9-10□□□	86.3	86.3	100	66.5	66.5	3	521.5
AWN 9-9-13□□□	86.3	86.3	125	66.5	66.5	3	594.5
AWN 9-9-17□□□	86.3	86.3	170	66.5	66.5	3	725.5
AWN 9-9-22□□□	86.3	86.3	220	66.5	66.5	3	871.5
AWN 9-9-28□□□	86.3	86.3	275	66.5	66.5	3	1,032
AWN11-6-11□□□	106.3	56.3	110	86.5	36.5	3	479.5
AWN11-6-15□□□	106.3	56.3	150	86.5	36.5	3	578
AWN11-6-19□□□	106.3	56.3	190	86.5	36.5	3	676.5
AWN11-6-24□□□	106.3	56.3	240	86.5	36.5	3	800
AWN12-8-11□□□	120	71.3	105	100.2	51.5	3	590.5
AWN12-8-14□□□	120	71.3	140	100.2	51.5	3	696.5
AWN12-8-17□□□	120	71.3	179.5	100.2	51.5	3	816
AWN12-8-22□□□	120	71.3	215	100.2	51.5	3	923.5
AWN16-9-14□□□	156.3	81.3	135	136.5	61.5	3	871.5
AWN16-9-18□□□	156.3	81.3	175	136.5	61.5	3	1,018.5
AWN16-9-23□□□	156.3	81.3	225	136.5	61.5	3	1,201.5
AWN16-9-28□□□	156.3	81.3	275	136.5	61.5	3	1,385
AWN21-9-17□□□	206.3	81.3	170	186.5	61.5	3	1,261
AWN21-9-21□□□	206.3	81.3	210	186.5	61.5	3	1,431.5
AWN21-9-26□□□	206.3	81.3	260	186.5	61.5	3	1,644.5
AWN21-9-31□□□	206.3	81.3	310	186.5	61.5	3	1,857.5

■ Custom length is available.

Accessories (Optional parts)

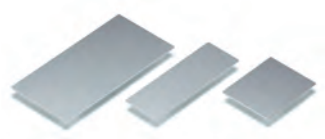

Mounting plate AWC series
See page 238

Hexagon socket head screw HCS series
See page 238

Cable gland
See page 333 ~ 340

Silicone protector AWSP series
See page 237

AWP series IP68 ALUMINIUM ENCLOSURE with SILICONE PROTECTOR

EMC Shielding Effects

IP68

Technical Data
Protection class: IP68 (24 hours/1m depth) Operating temperature: -40°C ~ +105°C Recommended torque: 1.0N • m

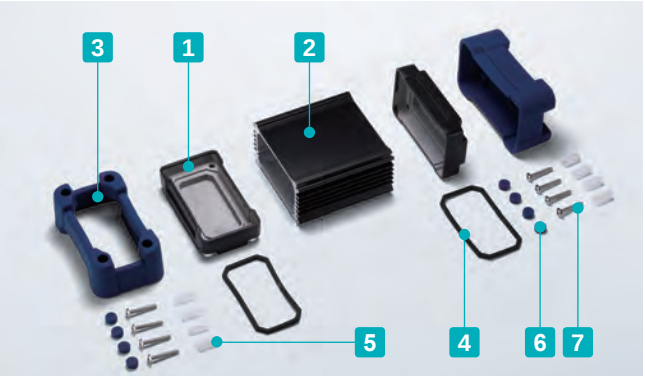

The inside of the end panels are unpainted for shielding.

- Strong impact resistant enclosure with tough silicone boot protectors.
- Specifically designed with heat dissipation effect, EMC shielding and IP68 rating.
- PCB or chassis can be horizontally mounted by sliding into an inner-grooved body frame.
- Available in 25 sizes and 6 different color combinations. Selectable from a total of 150 different combinations.
- Suitable for measuring instruments, industrial control box, industrial camera housing, etc.

Components

No.	Part name	Pcs	Material	Color / Finish
1	End panel	2	Diecast aluminium ADC12	Silver • Black / Painted (Unfinished inside)
2	Body frame	1	Extruded aluminium A6063S-T5	Silver • Black / Anodized with clear coating
3	Protector	2	Silicone	Black • Gray • Navy
4	Conductive gasket	2	Conductive silicone	Black
5	Spacer	8	Resin	White
6	Blind cap	8	Silicone	Black • Gray • Navy
7	Screw	8	Stainless steel	Unfinished

- AWP series utilizes AWN series E type enclosures.
  If N type is required, kindly purchase the enclosure and silicone protector separately.

Color Type

Code	S B Silver / Black	S G Silver / Gray	S N Silver / Navy
Color		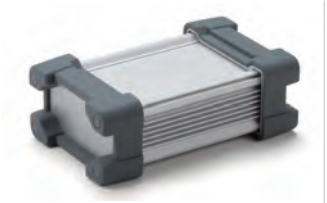	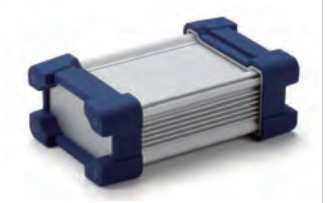
Code	**B B Black / Black**	**B G Black / Gray**	**B N Black / Navy**
Color		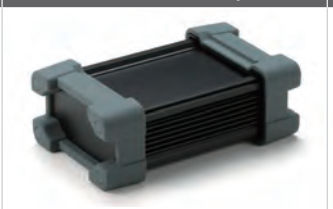	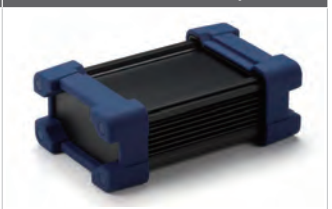

Ordering Number

For example, in case of ordering AWP8-5-9 size, Black enclosure and Navy silicone protector.

Product no. : AWP8-5-9

B **N**

Put a color code SB, SG, SN, BB, BG or BN.

※ Thermal resistance test condition
- Ambient air cooling
- Heat-sink fins are set perpendicular to the ground with temperature at 60°C.
- Anodized aluminium extrusion
- Heat source is applied on the opposite side (inner side) of the fins.

Product no. / Dimensions

See page 235 and 236 for detailed body frame dimensions.

Product no.	W	H	D	※Thermal resistance rate (°C/W)	Weight (g)
AWP 8-5- 9□□	87.4(80.8)	53.6(45.8)	114 (90)	5.97	353.5
AWP 8-5-12□□	87.4(80.8)	53.6(45.8)	139(115)	5.01	394.5
AWP 8-5-14□□	87.4(80.8)	53.6(45.8)	164(140)	4.37	436
AWP 8-5-18□□	87.4(80.8)	53.6(45.8)	199(175)	3.76	493.5
AWP 9-9-10□□	93.9(86.3)	95.1(86.3)	130(100)	3.1	693
AWP 9-9-13□□	93.9(86.3)	95.1(86.3)	155(125)	2.63	766
AWP 9-9-17□□	93.9(86.3)	95.1(86.3)	200(170)	2.12	897
AWP 9-9-22□□	93.9(86.3)	95.1(86.3)	250(220)	1.79	1,043
AWP 9-9-28□□	93.9(86.3)	95.1(86.3)	305(275)	1.54	1,203.5
AWP11-6-11□□	113.9(106.3)	65.1(56.3)	140(110)	4.52	652.5
AWP11-6-15□□	113.9(106.3)	65.1(56.3)	180(150)	3.62	751.5
AWP11-6-19□□	113.9(106.3)	65.1(56.3)	220(190)	3.08	850
AWP11-6-24□□	113.9(106.3)	65.1(56.3)	270(240)	2.64	973
AWP12-8-11□□	127.6(120)	80.1(71.3)	135(105)	3.6	778.5
AWP12-8-14□□	127.6(120)	80.1(71.3)	170(140)	2.93	885
AWP12-8-17□□	127.6(120)	80.1(71.3)	209.5(179.5)	2.47	1,004.5
AWP12-8-22□□	127.6(120)	80.1(71.3)	245(215)	2.18	1,112
AWP16-9-14□□	163.9(156.3)	90.1(81.3)	165(135)	2.64	1,094
AWP16-9-18□□	163.9(156.3)	90.1(81.3)	205(175)	2.2	1,240.5
AWP16-9-23□□	163.9(156.3)	90.1(81.3)	255(225)	1.86	1,424
AWP16-9-28□□	163.9(156.3)	90.1(81.3)	305(275)	1.63	1,607.5
AWP21-9-17□□	213.9(206.3)	90.1(81.3)	202(170)	2.3	1,571.5
AWP21-9-21□□	213.9(206.3)	90.1(81.3)	242(210)	1.99	1,742
AWP21-9-26□□	213.9(206.3)	90.1(81.3)	292(260)	1.72	1,955.5
AWP21-9-31□□	213.9(206.3)	90.1(81.3)	342(310)	1.54	2,168.5

■ Custom length is available.

■ ( ) value = enclosure dimension.

AWP dimensions

■ DXF/DWG/PDF/STP drawings available on our website.

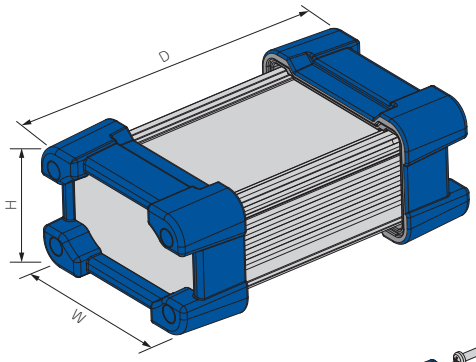

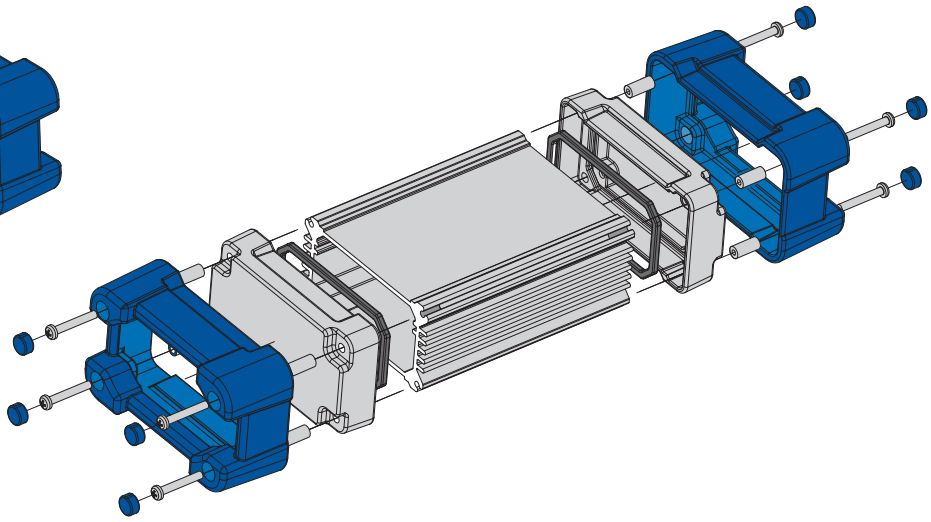

AWA series HEAT-SINK ALUMINIUM ENCLOSURE

AWA series is an aluminium enclosure that has a frame with heat-sink fins on both sides. Furthermore, the enclosure is also conductive, which provides a shielding effect. By machining the panels, the unit becomes extremely suitable to be used as high-end audio, or as an industrial equipment.

APPLICATION EXAMPLE

Industrial IoT Interface Device

Product by SEE Système Radio (France)

Industrial Fanless PC

Audio Amplifier

Wide-Band Solid State Optical Amplifier

Product by Spectra Quest Lab. (Japan)

Customization

CNC milling available for customization on AWA series.
See website for more details.

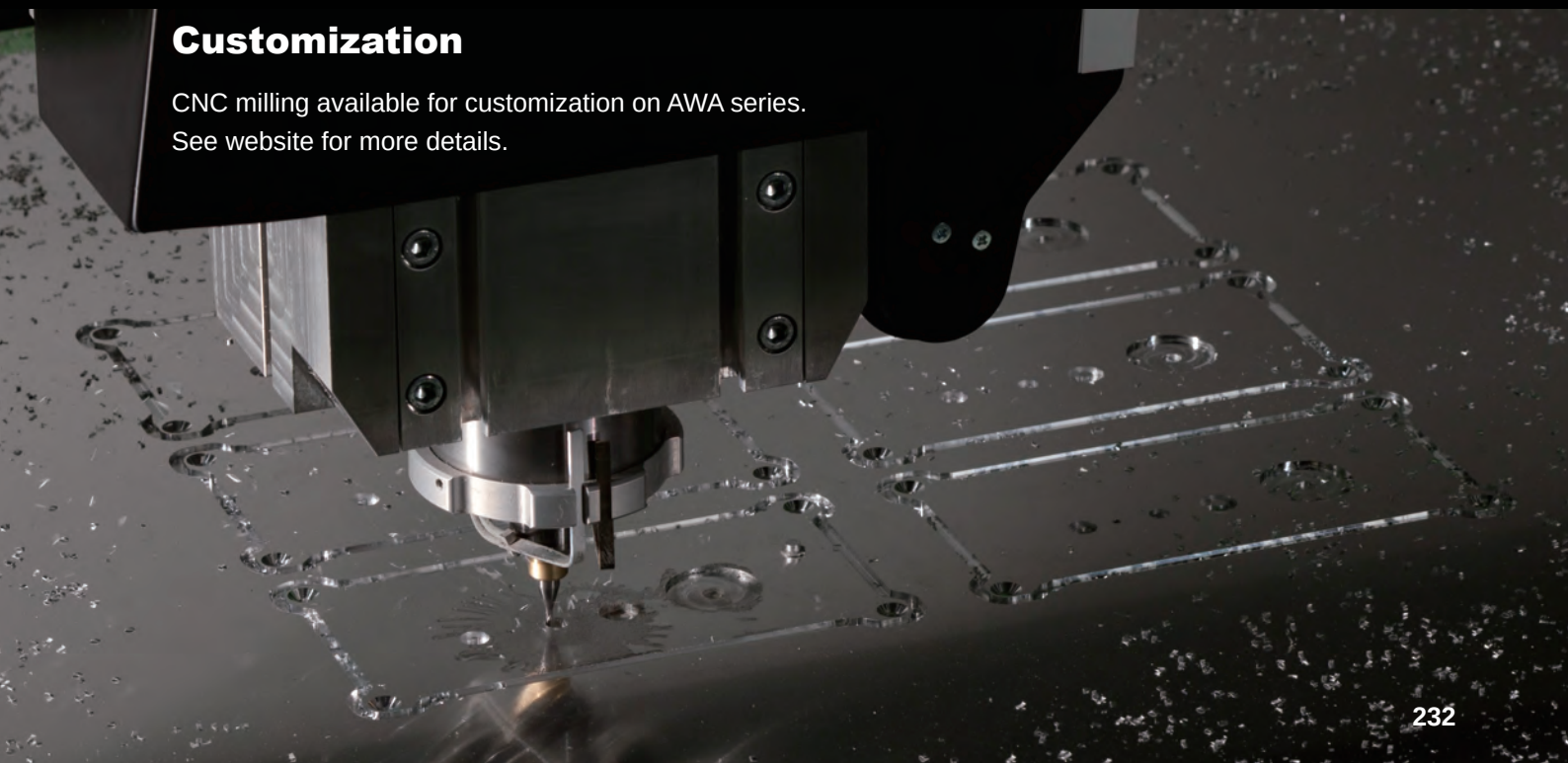

AWA series HEAT-SINK ALUMINIUM ENCLOSURE

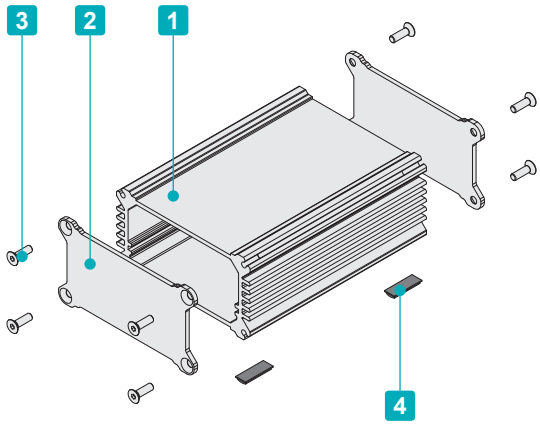

- Extruded aluminium frame manufactured with heat-sink sides.
- Silver anodized end panels makes for a luxurious finish.
- Conductivity is achieved by utilizing the contact between the unfinished end panels side, and the unfinished ends of the frame.
- PCB or chassis can be horizontally mounted by sliding into an inner-grooved body frame.
- Suitable for industrial fanless PC, measuring instrument, digital audio amplifier and so on.
- Custom length is available.

Included screws :
AWA5-3, 6-6, 8-4 models : Hex flat head M3-8 x 8 pcs
AWA8-8, 10-5, 12-7, 15-8 models : Hex flat head M4-10 x 8 pcs
AWA20-8 models : Hex flat head M5-10 x 8 pcs
※Hexagonal wrench included.

Component

No.	Part name	Pcs	Material	Color / Finish
1	Body frame	1	Extruded aluminium A6063S-T5	Silver / Anodized with clear coating
2	End panel	2	Aluminium A1050P	Silver / Anodized (Unfinished inside)
3	Hex socket screw	8	Stainless steel	Unfinished
4	Rubber feet	4	Polyurethane	Black

Accessories (Optional parts)

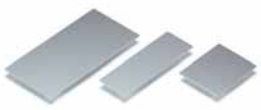

Mounting plate AWC series
See page 238

Aluminium isolation feet AFS • AFM series
See page 293 ~ 294

AWA dimensions

■ DXF/DWG/PDF/STP drawings available on our website.

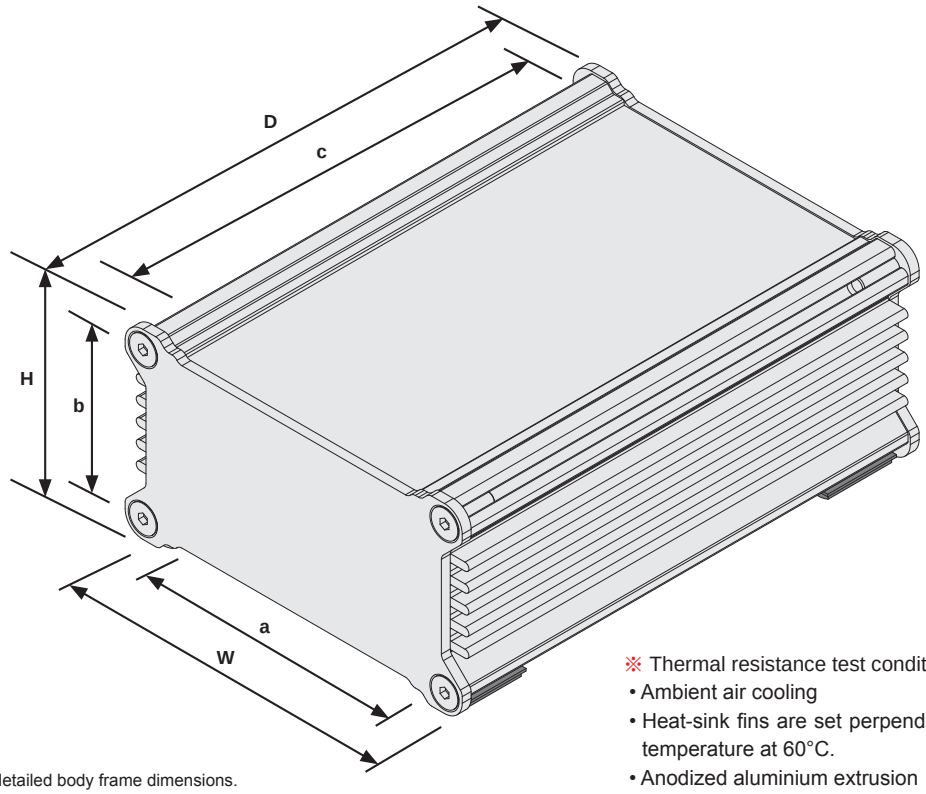

See page 235 and 236 for detailed body frame dimensions.

※ Thermal resistance test condition
- Ambient air cooling
- Heat-sink fins are set perpendicular to the ground with temperature at 60°C.
- Anodized aluminium extrusion
- Heat source is applied on the opposite side (inner side) of the fins.

Product no. / Dimensions

Product no.	External dimensions			Internal dimensions			※Thermal resistance rate (°C/W)	Weight (g)
	W	H	D	a	b	c		
AWA 5-3- 5SS	52	32	53.2	39	22.5	49.2	11.2	69.5
AWA 5-3- 7SS	52	32	73.2	39	22.5	69.2	9.18	90.5
AWA 5-3-10SS	52	32	98.2	39	22.5	94.2	7.64	116.5
AWA 5-3-12SS	52	32	123.2	39	22.5	119.2	6.63	142.5
AWA 6-6- 7SS	61	61	68	47	51	64	4.41	156
AWA 6-6-10SS	61	61	98	47	51	94	3.5	212
AWA 6-6-14SS	61	61	138	47	51	134	2.83	286
AWA 6-6-19SS	61	61	188	47	51	184	2.33	379
AWA 6-6-24SS	61	61	238	47	51	234	2.02	471.5
AWA 8-4- 8SS	76	41	78	62	31	74	5.97	154
AWA 8-4-10SS	76	41	103	62	31	99	5.01	195
AWA 8-4-13SS	76	41	128	62	31	124	4.37	236.5
AWA 8-4-16SS	76	41	163	62	31	159	3.76	294
AWA 8-8- 9SS	82	82	86	66.5	66.5	81	3.1	319.5
AWA 8-8-11SS	82	82	111	66.5	66.5	106	2.63	392.5
AWA 8-8-16SS	82	82	156	66.5	66.5	151	2.12	523.5
AWA 8-8-21SS	82	82	206	66.5	66.5	201	1.79	669.5
AWA 8-8-26SS	82	82	261	66.5	66.5	256	1.54	829.5
AWA10-5-10SS	102	52	95.6	86.5	36.5	90.6	4.52	288.5
AWA10-5-14SS	102	52	135.6	86.5	36.5	130.6	3.62	387.5
AWA10-5-18SS	102	52	175.6	86.5	36.5	170.6	3.08	486
AWA10-5-23SS	102	52	225.6	86.5	36.5	220.6	2.64	609
AWA12-7- 9SS	115.7	67	90.6	100.2	51.5	85.6	3.6	354
AWA12-7-12SS	115.7	67	125.6	100.2	51.5	120.6	2.93	460
AWA12-7-17SS	115.7	67	165.1	100.2	51.5	160.1	2.47	579.5
AWA12-7-20SS	115.7	67	200.6	100.2	51.5	195.6	2.18	687
AWA15-8-12SS	152	77	120.6	136.5	61.5	115.6	2.64	565.5
AWA15-8-16SS	152	77	160.6	136.5	61.5	155.6	2.2	712
AWA15-8-21SS	152	77	210.6	136.5	61.5	205.6	1.86	895.5
AWA15-8-26SS	152	77	260.6	136.5	61.5	255.6	1.63	1,079
AWA20-8-15SS	202.4	77.4	153.8	186.5	61.5	147.8	2.3	854.5
AWA20-8-19SS	202.4	77.4	193.8	186.5	61.5	187.8	1.99	1,025
AWA20-8-24SS	202.4	77.4	243.8	186.5	61.5	237.8	1.72	1,238
AWA20-8-29SS	202.4	77.4	293.8	186.5	61.5	287.8	1.54	1,451.5

Cross-section view of frame

■ DXF/DWG/PDF/STP drawings available on our website.

AW • AWN5-4-□
AWA5-3-□

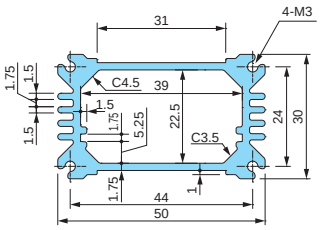

AW • AWN • AWP7-7-□
AWA6-6-□

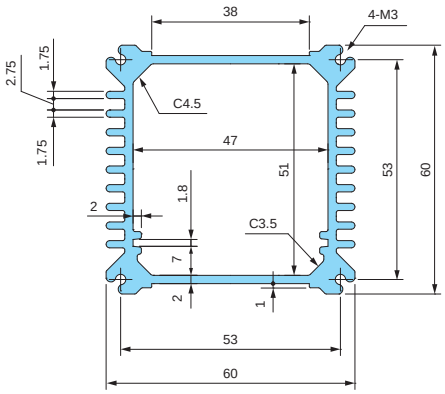

AW • AWN • AWP8-5-□
AWA8-4-□

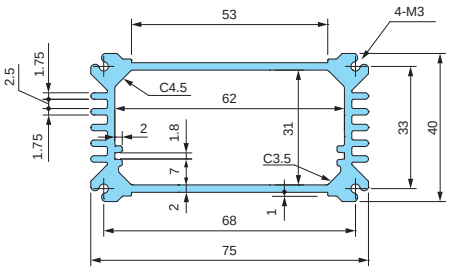

AW • AWN • AWP9-9-□
AWA8-8-□

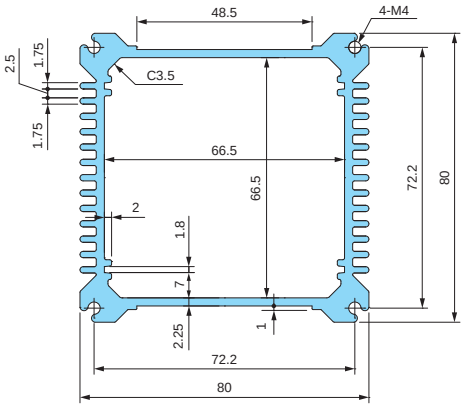

AW • AWN • AWP11-6-□
AWA10-5-□

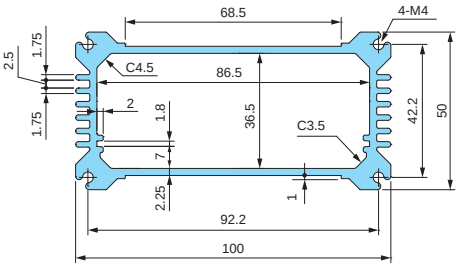

AW • AWN • AWP12-8-□
AWA12-7-□

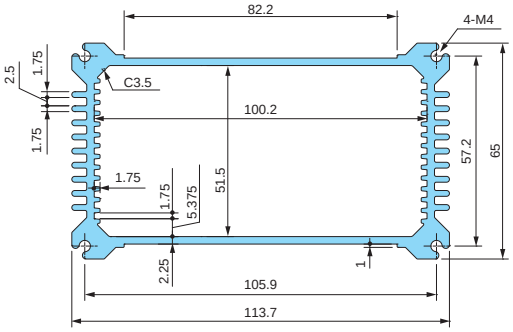

AW • AWN • AWP16-9-□
AWA15-8-□

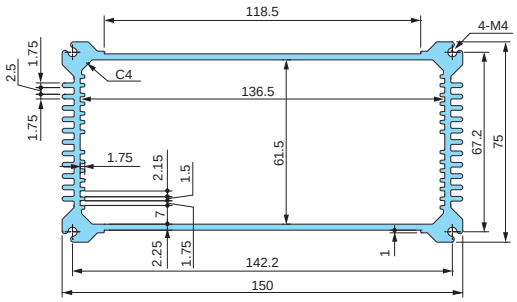

AW • AWN • AWP21-9-□
AWA20-8-□

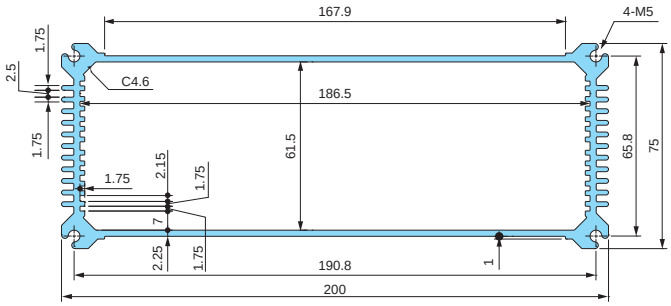

※ Thermal resistance test condition
- Ambient air cooling
- Heat-sink fins are set perpendicular to the ground with temperature at 60°C.
- Anodized aluminium extrusion
- Heat source is applied on the opposite side (inner side) of the fins.

Product no.				Frame length	※Thermal resistance rate (°C/W)
AW 5-4- 7	AWN 5-4- 7	–	AWA 5-3- 5	49.2	11.2
AW 5-4- 9	AWN 5-4- 9	–	AWA 5-3- 7	69.2	9.18
AW 5-4-11	AWN 5-4-11	–	AWA 5-3-10	94.2	7.64
AW 5-4-14	AWN 5-4-14	–	AWA 5-3-12	119.2	6.63
AW 7-7- 8	AWN 7-7- 8	–	AWA 6-6- 7	64	4.41
AW 7-7-11	AWN 7-7-11	–	AWA 6-6-10	94	3.5
AW 7-7-15	AWN 7-7-15	–	AWA 6-6-14	134	2.83
AW 7-7-20	AWN 7-7-20	–	AWA 6-6-19	184	2.33
AW 7-7-25	AWN 7-7-25	–	AWA 6-6-24	234	2.02
AW 8-5- 9	AWN 8-5- 9	AWP 8-5- 9	AWA 8-4- 8	74	5.97
AW 8-5-12	AWN 8-5-12	AWP 8-5-12	AWA 8-4-10	99	5.01
AW 8-5-14	AWN 8-5-14	AWP 8-5-14	AWA 8-4-13	124	4.37
AW 8-5-18	AWN 8-5-18	AWP 8-5-18	AWA 8-4-16	159	3.76
AW 9-9-10	AWN 9-9-10	AWP 9-9-10	AWA 8-8- 9	81	3.1
AW 9-9-13	AWN 9-9-13	AWP 9-9-13	AWA 8-8-11	106	2.63
AW 9-9-17	AWN 9-9-17	AWP 9-9-17	AWA 8-8-16	151	2.12
AW 9-9-22	AWN 9-9-22	AWP 9-9-22	AWA 8-8-21	201	1.79
AW 9-9-28	AWN 9-9-28	AWP 9-9-28	AWA 8-8-26	256	1.54
AW11-6-11	AWN11-6-11	AWP11-6-11	AWA10-5-10	90.6	4.52
AW11-6-15	AWN11-6-15	AWP11-6-15	AWA10-5-14	130.6	3.62
AW11-6-19	AWN11-6-19	AWP11-6-19	AWA10-5-18	170.6	3.08
AW11-6-24	AWN11-6-24	AWP11-6-24	AWA10-5-23	220.6	2.64
AW12-8-11	AWN12-8-11	AWP12-8-11	AWA12-7-9	85.6	3.6
AW12-8-14	AWN12-8-14	AWP12-8-14	AWA12-7-12	120.6	2.93
AW12-8-17	AWN12-8-17	AWP12-8-17	AWA12-7-17	160.1	2.47
AW12-8-22	AWN12-8-22	AWP12-8-22	AWA12-7-20	195.6	2.18
AW16-9-14	AWN16-9-14	AWP16-9-14	AWA15-8-12	115.6	2.64
AW16-9-18	AWN16-9-18	AWP16-9-18	AWA15-8-16	155.6	2.2
AW16-9-23	AWN16-9-23	AWP16-9-23	AWA15-8-21	205.6	1.86
AW16-9-28	AWN16-9-28	AWP16-9-28	AWA15-8-26	255.6	1.63
AW21-9-17	AWN21-9-17	AWP21-9-17	AWA20-8-15	147.8	2.3
AW21-9-21	AWN21-9-21	AWP21-9-21	AWA20-8-19	187.8	1.99
AW21-9-26	AWN21-9-26	AWP21-9-26	AWA20-8-24	237.8	1.72
AW21-9-31	AWN21-9-31	AWP21-9-31	AWA20-8-29	287.8	1.54

AWSP series SILICONE PROTECTOR for AWN

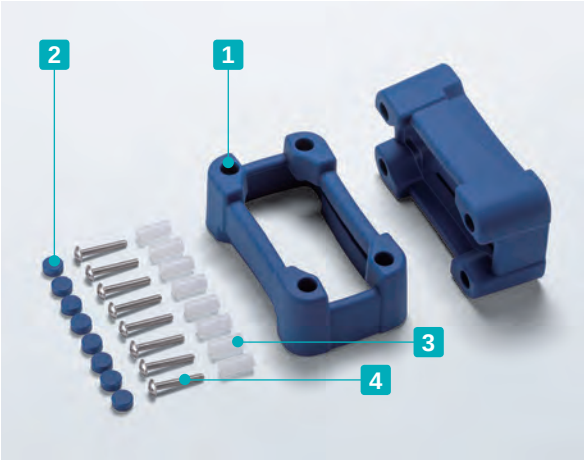

Color Type

Code	B Black	G Gray	N Navy
Color			

- Silicone protector for AWN series.
- Protect switches and/or connectors on end panels from impact when dropped, etc. Custom color is available from just 1 set. For 250 sets or more, manufacture costs will be similar to a standard color. Please inquire for more details. For custom color order, please specify **PANTONE**® color code.

AWSP dimensions

- DXF/DWG/PDF drawings available on our website.

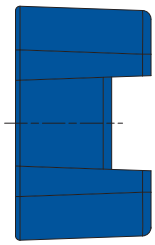

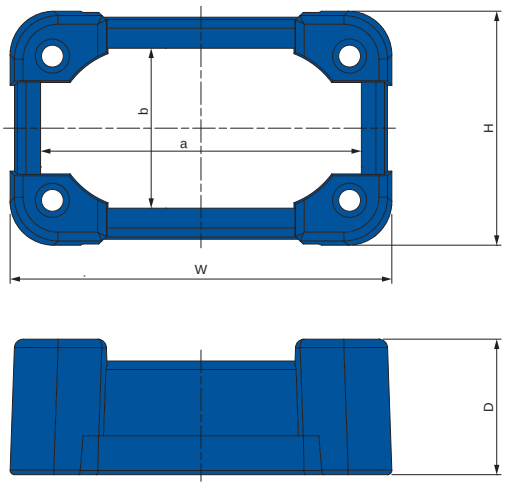

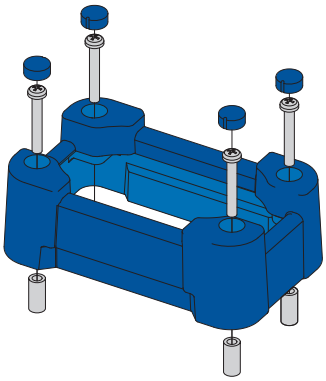

Components

No.	Part name	Pcs	Material	Color / Finish
1	Protector	2	Silicone	Black • Gray • Navy
2	Blind cap	8	Silicone	Black • Gray • Navy
3	Spacer	8	POM	White
4	Screw	8	Stainless steel	Unfinished

Product no. / Dimensions

- Please suffix color code at the end of the product number.

Product no.	W	H	D	a	b	Screw size	Suitable models	Weight (g)
AWSP 8-5□	87.4	53.6	31	73.4	36.6	M3	AWN 8-5-□	100.5
AWSP 9-9□	93.9	95.1	35.5	76.9	75.1	M4	AWN 9-9-□	184.5
AWSP11-6□	113.9	65.1	35.5	96.9	45.1	M4	AWN11-6-□	186
AWSP12-8□	127.6	80.1	35.5	110.6	60.1	M4	AWN12-8-□	201
AWSP16-9□	163.9	90.1	35.5	145.9	69.1	M4	AWN16-9-□	235
AWSP21-9□	213.9	90.1	39.5	192.9	66.1	M5	AWN21-9-□	333

AWC series ALUMINIUM MOUNTING PLATE for AW • AWN • AWP • AWA

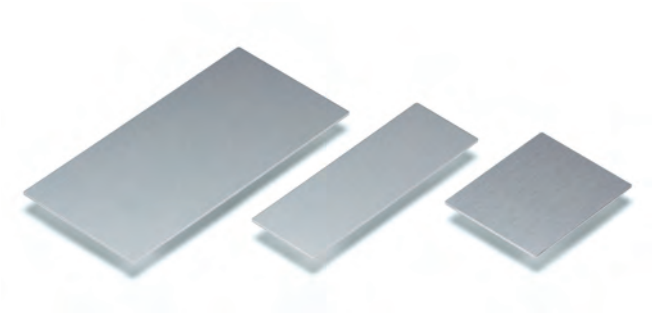

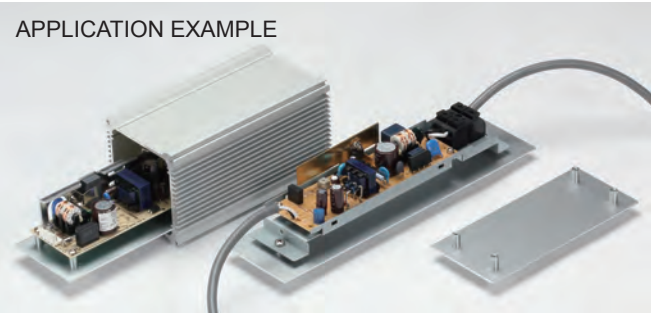

- Material: Aluminium A1050P t=1.5 / Silver anodized
- Mounting plate for AW, AWN, AWP, and AWA enclosures.
- Utilize for mounting PCB, power supply, terminal blocks, etc.

Product no. / Dimensions

Product no.	W	D	Suitable models
AWC 5- 7	38.9	49.2	AW • AWN 5-4- 7 • AWA 5-3- 5
AWC 5- 9	38.9	69.2	AW • AWN 5-4- 9 • AWA 5-3- 7
AWC 5-11	38.9	94.2	AW • AWN 5-4-11 • AWA 5-3-10
AWC 5-14	38.9	119.2	AW • AWN 5-4-14 • AWA 5-3-12
AWC 7- 8	47	64	AW • AWN • AWP 7-7- 8 • AWA 6-6- 7
AWC 7-11	47	94	AW • AWN • AWP 7-7-11 • AWA 6-6-10
AWC 7-15	47	134	AW • AWN • AWP 7-7-15 • AWA 6-6-14
AWC 7-20	47	184	AW • AWN • AWP 7-7-20 • AWA 6-6-19
AWC 7-25	47	234	AW • AWN • AWP 7-7-25 • AWA 6-6-24
AWC 8- 9	61.8	74	AW • AWN • AWP 8-5- 9 • AWA 8-4- 8
AWC 8-12	61.8	99	AW • AWN • AWP 8-5-12 • AWA 8-4-10
AWC 8-14	61.8	124	AW • AWN • AWP 8-5-14 • AWA 8-4-13
AWC 8-18	61.8	159	AW • AWN • AWP 8-5-18 • AWA 8-4-16
AWC 9-10	66.5	81	AW • AWN • AWP 9-9-10 • AWA 8-8- 9
AWC 9-13	66.5	106	AW • AWN • AWP 9-9-13 • AWA 8-8-11
AWC 9-17	66.5	151	AW • AWN • AWP 9-9-17 • AWA 8-8-16
AWC 9-22	66.5	201	AW • AWN • AWP 9-9-22 • AWA 8-8-21
AWC 9-28	66.5	256	AW • AWN • AWP 9-9-28 • AWA 8-8-26
AWC11-11	86.5	90.6	AW • AWN • AWP11-6-11 • AWA10-5-10
AWC11-15	86.5	130.6	AW • AWN • AWP11-6-15 • AWA10-5-14
AWC11-19	86.5	170.6	AW • AWN • AWP11-6-19 • AWA10-5-18
AWC11-24	86.5	220.6	AW • AWN • AWP11-6-24 • AWA10-5-23
AWC12-11	100.2	85.6	AW • AWN • AWP12-8-11 • AWA12-7- 9
AWC12-14	100.2	120.6	AW • AWN • AWP12-8-14 • AWA12-7-12
AWC12-17	100.2	160.1	AW • AWN • AWP12-8-17 • AWA12-7-17
AWC12-22	100.2	195.6	AW • AWN • AWP12-8-22 • AWA12-7-20
AWC16-14	136.3	115.6	AW • AWN • AWP16-9-14 • AWA15-8-12
AWC16-18	136.3	155.6	AW • AWN • AWP16-9-18 • AWA15-8-16
AWC16-23	136.3	205.6	AW • AWN • AWP16-9-23 • AWA15-8-21
AWC16-28	136.3	255.6	AW • AWN • AWP16-9-28 • AWA15-8-26
AWC21-17	186.1	147.8	AW • AWN • AWP21-9-17 • AWA20-8-15
AWC21-21	186.1	187.8	AW • AWN • AWP21-9-21 • AWA20-8-19
AWC21-26	186.1	237.8	AW • AWN • AWP21-9-26 • AWA20-8-24
AWC21-31	186.1	287.8	AW • AWN • AWP21-9-31 • AWA20-8-29

AWC dimensions

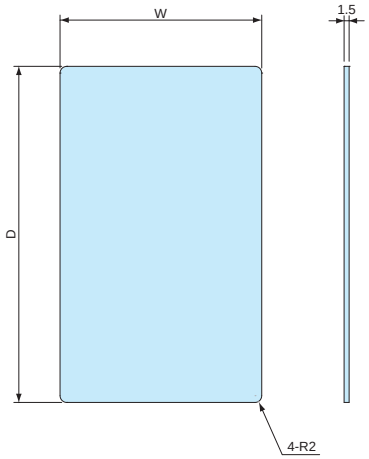

- DXF/DWG/PDF drawings available on our website.

HCS series HEXAGON SOCKET HEAD SCREW for AW • AWN

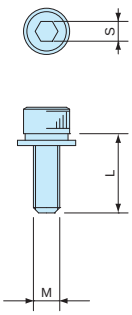

- Hexagon socket head screws for fastening the end panels of AW and AWN enclosures.
- Utilize for tamper-resistance functionality or for an elegant sleek look.

Product no. / Dimensions

Product no.	M	L	S	Material	Pack of
HCS3-12S	3	12	2.5	Stainless steel	8
HCS4-12S	4	12	3	Stainless steel	8
HCS5-12S	5	12	4	Stainless steel	8

EXH • EXHE • EXHF • EXHFE series

HEAT-SINK ALUMINIUM ENCLOSURE

EXH • EXHE • EXHF • EXHFE series are aluminium enclosures with a highly efficient heat-sink top cover. Suitable to be used as fanless PC, power amplifier, and power supply box where heat dissipation is required.
Wide range, 64 different sizes available with EMC shielded and flanged models.

Waved surface heat-sink fins for maximum cooling performance!

- Each heat-sink fin has a waved surface construction for maximum cooling performance.

Waved Surface

HEAT DISSIPATION EXAMPLE

- EXH series has grooves to put M3 nuts inside its heat-sink cover.
  It is possible to construct a heat conduction route from your heat source to heat-sink cover easily for better heat dissipation performance.

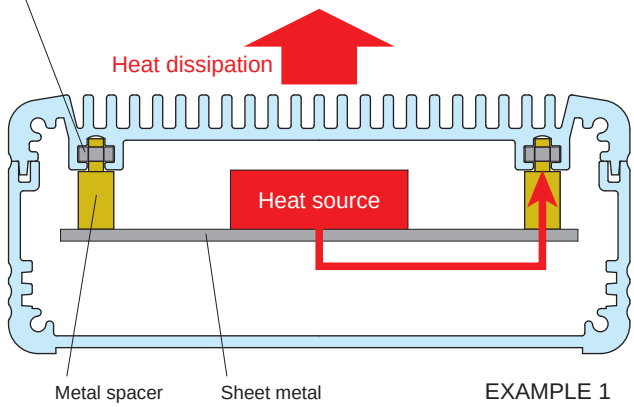

EXAMPLE 1

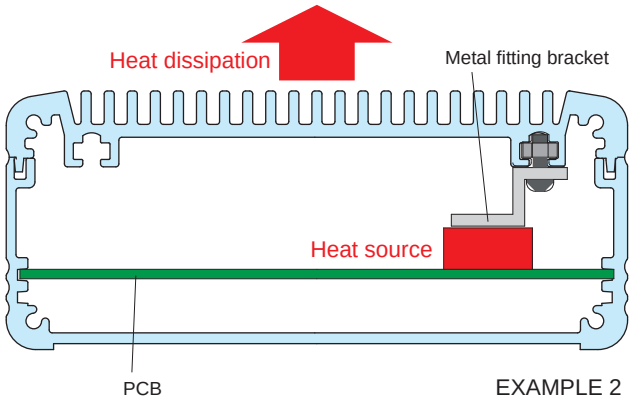

EXAMPLE 2

CUSTOMIZATION EXAMPLE

CNC Machining on Heat-sink Cover

Heat-sink plates can be customized with our high speed CNC machines.

Pin Shaped Fin Customization

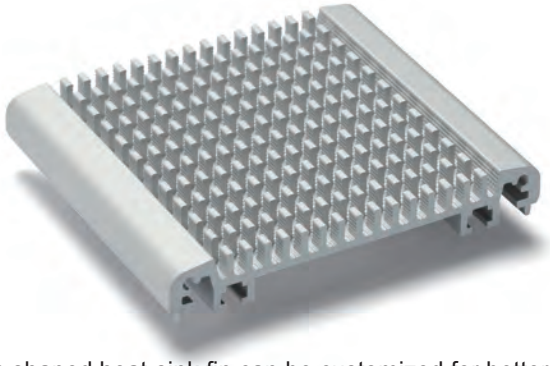

Pin shaped heat-sink fin can be customized for better cooling performance.

Color Anodization

Various colors, such as blue, red, orange, green or purple can be anodized as per your requirements.

■ Not all colors and shades of colors are possible.

Custom Length Available

APPLICATION EXAMPLE

Stabilized Diode Laser

Product by Spectra Quest Lab. (Japan)

Controller

Laser Head

IoT Gateway

Product by VNPT Technology (Vietnam)

UPS Battery Monitoring System

Product by BatteryDAQ (USA)

All-in-one Edge Node

Product by SHINWA (Japan)

4 Channel Power Switching Edge Node

Product by SHINWA (Japan)

Ultra Low Noise Regulation Power Supply

Product by Impex Technology (UAE)

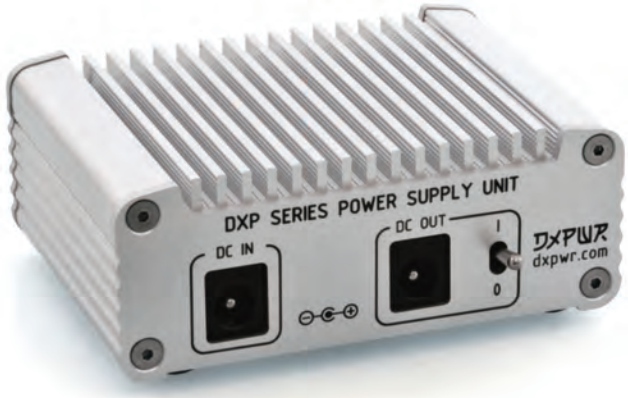

EXHE series HEAT-SINK ALUMINIUM EMC SHIELDED ENCLOSURE

NEW

Heat Resistant

EMC Shielding Effects

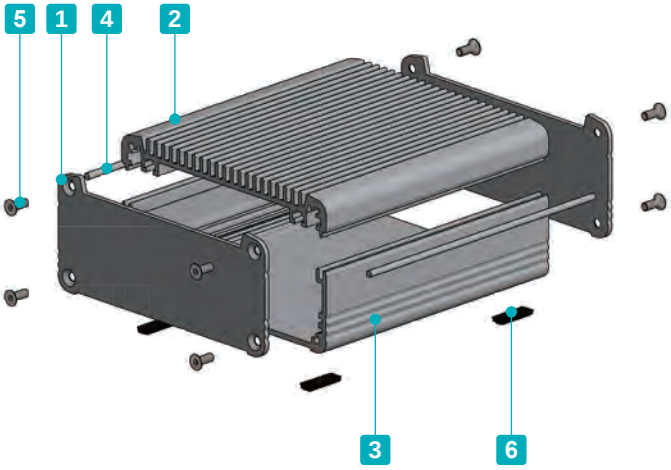

- EMC shielding is achieved by having the unfinished inner sides of the heat-sink top cover, bottom frame and panels, as well as the shielding gasket in contact with one another.
- Aluminum enclosure equipped with a highly efficient heat-sink top cover.
- Grooves for M3 sliding nut are built into the heat-sink top cover and bottom frame (140mm or wider). Optional nut is available.

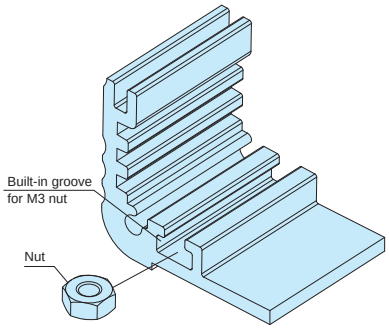

Components

No.	Part name	Pcs	Material	Color / Finish
1	Panel	2	Aluminium A1050P	Metallic silver / Painted (Unfinished inside)
2	Heat-sink top cover	1	Extruded aluminium A6063S-T5	Metallic silver / Painted (Unfinished inside)
3	Bottom frame	1	Extruded aluminium A6063S-T5	Metallic silver / Painted (Unfinished inside)
4	Fabric-over-foam gasket	2	Conductive fabric : TPE	Metallic gray
5	Screw (Hexagonal)	8	Stainless steel	Unfinished
6	Rubber feet	4	Polyurethane • Synthetic rubber	Black

■ Rubber feet material : Polyurethane : EXHE8-□ ~ 19-□models • Synthetic rubber : EXHE23-□ ~ 29-□ models.

How to install shield gaskets

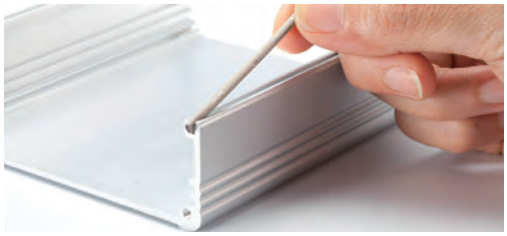

■ Insert fabric-over-foam gaskets into the joint-grooves on both sides of the bottom cover.

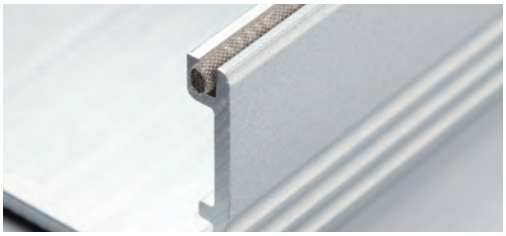

■ Ensure that a small portion of the fabric-over-foam gaskets protrude out in order to maintain connections with the end panels.

Included screws
EXHE8-□ models : M2.5-8 x 8 pcs
EXHE11-□, 14-□ models : M3-8 x 8 pcs
EXHE19-□ models : M4-10 x 8 pcs
EXHE23-□, 29-□ models : M5-10 x 8 pcs
※Hexagonal wrench included.

EXHE dimensions

■ DXF/DWG/PDF/STP drawings available on our website.

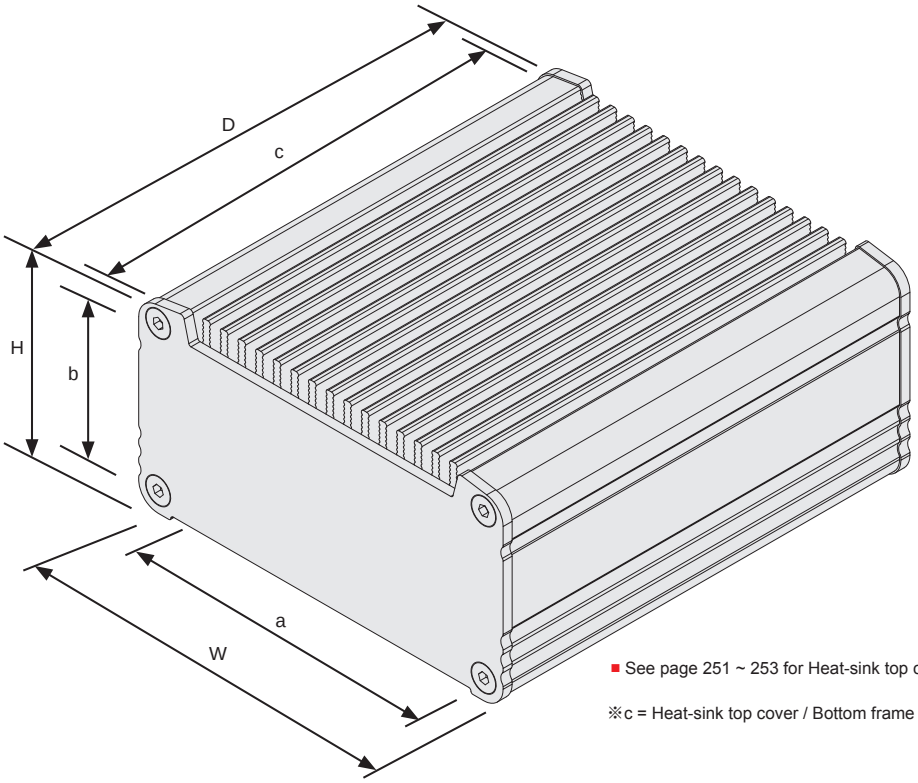

■ See page 251 ~ 253 for Heat-sink top cover / Bottom frame dimensions.

※c = Heat-sink top cover / Bottom frame length.

Product no. / Dimensions

Product no.	External dimensions			Internal dimensions			※Thermal resistance rate (°C/W)
	W	H	D	a	b	c	
EXHE 8-3- 6SS	80.6	30.7	60	66	15	56	7.32
EXHE 8-3- 9SS	80.6	30.7	90	66	15	86	5.65
EXHE 8-3-12SS	80.6	30.7	120	66	15	116	4.72
EXHE 8-4- 6SS	80.6	40.7	60	66	25	56	7.32
EXHE 8-4- 9SS	80.6	40.7	90	66	25	86	5.65
EXHE 8-4-12SS	80.6	40.7	120	66	25	116	4.72
EXHE 8-6- 6SS	80.6	55.7	60	66	40	56	7.32
EXHE 8-6- 9SS	80.6	55.7	90	66	40	86	5.65
EXHE 8-6-12SS	80.6	55.7	120	66	40	116	4.72
EXHE11-3- 8SS	106	31.1	78	88.5	14	74	4.82
EXHE11-3-12SS	106	31.1	118	88.5	14	114	3.72
EXHE11-3-16SS	106	31.1	164	88.5	14	160	3.03
EXHE11-5- 8SS	106	46.1	78	88.5	29	74	4.82
EXHE11-5-12SS	106	46.1	118	88.5	29	114	3.72
EXHE11-5-16SS	106	46.1	164	88.5	29	160	3.03
EXHE11-6- 8SS	106	61.1	78	88.5	44	74	4.82
EXHE11-6-12SS	106	61.1	118	88.5	44	114	3.72
EXHE11-6-16SS	106	61.1	164	88.5	44	160	3.03
EXHE14-4-10SS	141	36.1	97	101.8	24.3	93	3.4
EXHE14-4-14SS	141	36.1	137	101.8	24.3	133	2.75
EXHE14-4-19SS	141	36.1	187	101.8	24.3	183	2.27
EXHE14-5-10SS	141	51.1	97	101.8	39.3	93	3.4
EXHE14-5-14SS	141	51.1	137	101.8	39.3	133	2.75
EXHE14-5-19SS	141	51.1	187	101.8	39.3	183	2.27
EXHE14-7-10SS	141	71.1	97	101.8	59.3	93	3.4
EXHE14-7-14SS	141	71.1	137	101.8	59.3	133	2.75
EXHE14-7-19SS	141	71.1	187	101.8	59.3	183	2.27
EXHE14-9-10SS	141	91.1	97	101.8	79.3	93	3.4
EXHE14-9-14SS	141	91.1	137	101.8	79.3	133	2.75
EXHE14-9-19SS	141	91.1	187	101.8	79.3	183	2.27

※Thermal resistance test condition
- Ambient air cooling.
- Heat-sink fins are set perpendicular to the ground with temperature at 60°C.
- Painted aluminium extrusion.
- Heat source is applied on the opposite side (inner side) of the fins.

Product no.	External dimensions			Internal dimensions			※Thermal resistance rate (°C/W)
	W	H	D	a	b	c	
EXHE19- 4-13SS	186.5	43.5	125	131	26.8	120	1.92
EXHE19- 4-18SS	186.5	43.5	177	131	26.8	172	1.56
EXHE19- 4-23SS	186.5	43.5	230	131	26.8	225	1.32
EXHE19- 4-29SS	186.5	43.5	285	131	26.8	280	1.15
EXHE19- 6-13SS	186.5	61.5	125	131	44.8	120	1.92
EXHE19- 6-18SS	186.5	61.5	177	131	44.8	172	1.56
EXHE19- 6-23SS	186.5	61.5	230	131	44.8	225	1.32
EXHE19- 6-29SS	186.5	61.5	285	131	44.8	280	1.15
EXHE19- 8-13SS	186.5	81.5	125	131	64.8	120	1.92
EXHE19- 8-18SS	186.5	81.5	177	131	64.8	172	1.56
EXHE19- 8-23SS	186.5	81.5	230	131	64.8	225	1.32
EXHE19- 8-29SS	186.5	81.5	285	131	64.8	280	1.15
EXHE19-11-13SS	186.5	106.5	125	131	89.8	120	1.92
EXHE19-11-18SS	186.5	106.5	177	131	89.8	172	1.56
EXHE19-11-23SS	186.5	106.5	230	131	89.8	225	1.32
EXHE19-11-29SS	186.5	106.5	285	131	89.8	280	1.15
EXHE23- 5-15SS	232	52	153	176	34.8	147	1.47
EXHE23- 5-21SS	232	52	213	176	34.8	207	1.2
EXHE23- 5-27SS	232	52	273	176	34.8	267	1.03
EXHE23- 5-33SS	232	52	333	176	34.8	327	0.91
EXHE23- 8-15SS	232	77	153	176	59.8	147	1.47
EXHE23- 8-21SS	232	77	213	176	59.8	207	1.2
EXHE23- 8-27SS	232	77	273	176	59.8	267	1.03
EXHE23- 8-33SS	232	77	333	176	59.8	327	0.91
EXHE23-10-15SS	232	102	153	176	84.8	147	1.47
EXHE23-10-21SS	232	102	213	176	84.8	207	1.2
EXHE23-10-27SS	232	102	273	176	84.8	267	1.03
EXHE23-10-33SS	232	102	333	176	84.8	327	0.91
EXHE29- 8-23SS	287.5	77.5	234	230	59,5	228	0.97
EXHE29- 8-30SS	287.5	77.5	304	230	59,5	298	0.82
EXHE29- 8-38SS	287.5	77.5	384	230	59,5	378	0.71
EXHE29-13-23SS	287.5	127.5	234	230	109.5	228	0.97
EXHE29-13-30SS	287.5	127.5	304	230	109.5	298	0.82
EXHE29-13-38SS	287.5	127.5	384	230	109.5	378	0.71

■ Custom length is available.

EXHFE series FLANGED HEAT-SINK ALUMINIUM EMC SHIELDED ENCLOSURE

NEW

Heat Resistant

EMC Shielding Effects

- EMC shielding is achieved by having the unfinished internal parts of the enclosure, as well as the fabric-over-foam gasket, in contact with one another.
- Aluminum enclosure equipped with a highly efficient heat-sink top cover.
- Equipped with flanged bracket for easy wall mounting.

EXHFE8-□, 11-□, 14-□

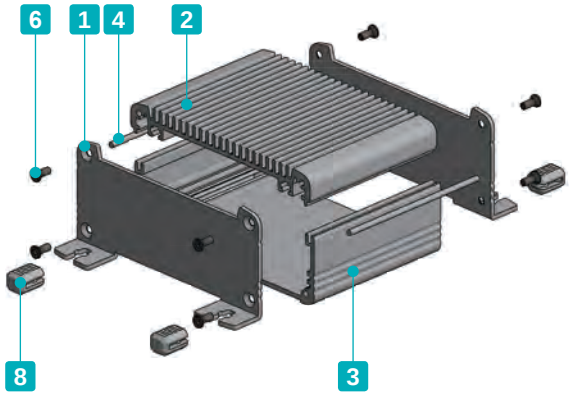

EXHFE19-□, 23-□, 29-□

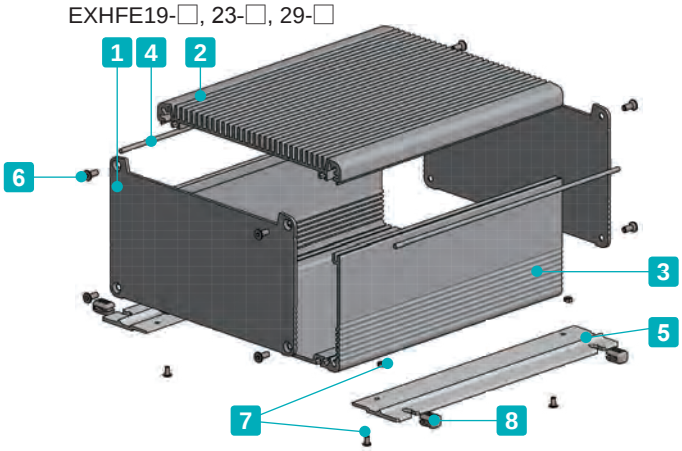

Components

No.	Part name	Pcs	Material	Color / Finish
1	Flanged panel (EXHF8-□, 11-□, 14-□) Panel (EXHF19-□, 23-□, 29-□)	2	Aluminium A1050P	Metallic silver / Painted (Unfinished inside)
2	Heat-sink top cover	1	Extruded aluminium A6063S-T5	Metallic silver / Painted (Unfinished inside)
3	Bottom frame	1	Extruded aluminium A6063S-T5	Metallic silver / Painted (Unfinished inside)
4	Fabric-over-foam gasket	2	Conductive fabric : TPE	Metallic gray
5	Flange bracket	2	Extruded aluminium A6063S-T5	Metallic silver / Painted
6	Panel screw (Hexagonal)	8	Stainless steel	Unfinished
7	Flange screw & nut	4 each	Steel	Black trivalent chromate
8	Rubber feet	4	Silicone	Black

How to install shield gaskets

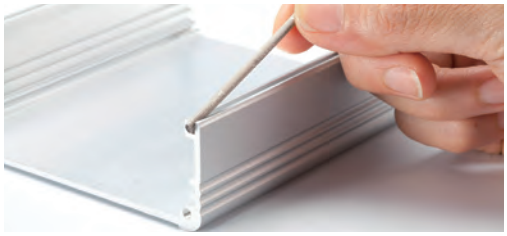

- Insert fabric-over-foam gaskets into the joint-grooves on both sides of the bottom cover.

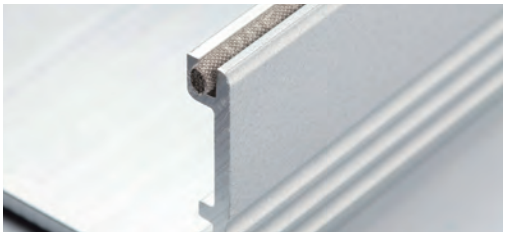

- Ensure that a small portion of the fabric-over-foam gaskets protrude out in order to maintain connections with the end panels.

Included screws
EXHFE8-□ models : M2.5-8 x 8 pcs
EXHFE11-□, 14-□ models : M3-8 x 8 pcs
EXHFE19-□ models : M4-10 x 8 pcs
EXHFE23-□, 29-□ models : M5-10 x 8 pcs
※Hexagonal wrench included.

EXHFE dimensions

■ DXF/DWG/PDF/STP drawings available on our website.

EXHFE8-□, 11-□, 14-□

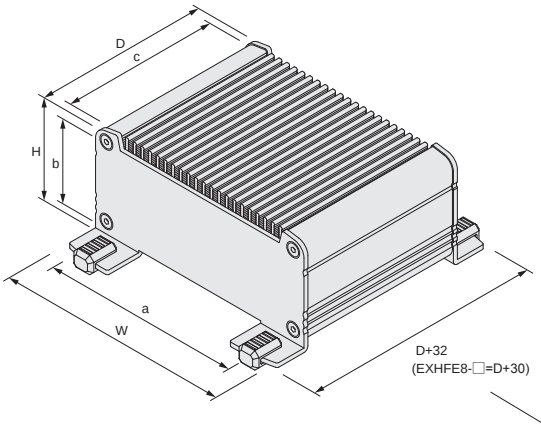

EXHFE19-□, 23-□, 29-□

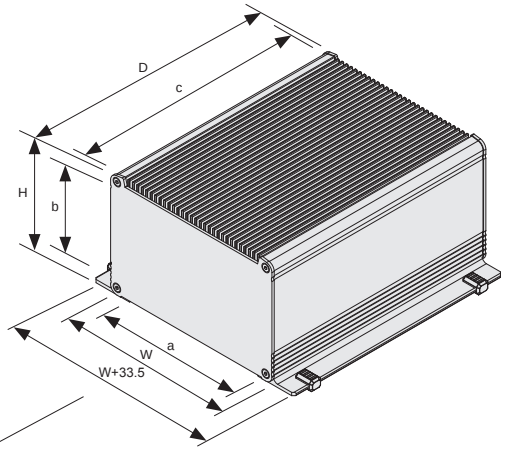

■ See page 251 ~ 253 for Heat-sink top cover / Bottom frame dimensions.
※c = Heat-sink top cover / Bottom frame length.

*Rubber feet dimensions are not included.

Product no. / Dimensions

Product no.	External dimensions			Internal dimensions			※Thermal resistance rate (°C/W)
	W	H	D	a	b	c	
EXHFE 8-3- 6SS	80.6	32.8	60	66	15	56	7.32
EXHFE 8-3- 9SS	80.6	32.8	90	66	15	86	5.65
EXHFE 8-3-12SS	80.6	32.8	120	66	15	116	4.72
EXHFE 8-4- 6SS	80.6	42.8	60	66	25	56	7.32
EXHFE 8-4- 9SS	80.6	42.8	90	66	25	86	5.65
EXHFE 8-4-12SS	80.6	42.8	120	66	25	116	4.72
EXHFE 8-6- 6SS	80.6	57.8	60	66	40	56	7.32
EXHFE 8-6- 9SS	80.6	57.8	90	66	40	86	5.65
EXHFE 8-6-12SS	80.6	57.8	120	66	40	116	4.72
EXHFE11-3- 8SS	106	33.1	78	88.5	14	74	4.82
EXHFE11-3-12SS	106	33.1	118	88.5	14	114	3.72
EXHFE11-3-16SS	106	33.1	164	88.5	14	160	3.03
EXHFE11-5- 8SS	106	48.1	78	88.5	29	74	4.82
EXHFE11-5-12SS	106	48.1	118	88.5	29	114	3.72
EXHFE11-5-16SS	106	48.1	164	88.5	29	160	3.03
EXHFE11-6- 8SS	106	63.1	78	88.5	44	74	4.82
EXHFE11-6-12SS	106	63.1	118	88.5	44	114	3.72
EXHFE11-6-16SS	106	63.1	164	88.5	44	160	3.03
EXHFE14-4-10SS	141	38.1	97	101.8	24.3	93	3.4
EXHFE14-4-14SS	141	38.1	137	101.8	24.3	133	2.75
EXHFE14-4-19SS	141	38.1	187	101.8	24.3	183	2.27
EXHFE14-5-10SS	141	53.1	97	101.8	39.3	93	3.4
EXHFE14-5-14SS	141	53.1	137	101.8	39.3	133	2.75
EXHFE14-5-19SS	141	53.1	187	101.8	39.3	183	2.27
EXHFE14-7-10SS	141	73.1	97	101.8	59.3	93	3.4
EXHFE14-7-14SS	141	73.1	137	101.8	59.3	133	2.75
EXHFE14-7-19SS	141	73.1	187	101.8	59.3	183	2.27
EXHFE14-9-10SS	141	93.1	97	101.8	79.3	93	3.4
EXHFE14-9-14SS	141	93.1	137	101.8	79.3	133	2.75
EXHFE14-9-19SS	141	93.1	187	101.8	79.3	183	2.27

※Thermal resistance test condition
- Ambient air cooling.
- Heat-sink fins are set perpendicular to the ground with temperature at 60°C.
- Painted aluminium extrusion.
- Heat source is applied on the opposite side (inner side) of the fins.

Product no.	External dimensions			Internal dimensions			※Thermal resistance rate (°C/W)
	W	H	D	a	b	c	
EXHFE19- 4-13SS	186.5	45.25	125	131	26.8	120	1.92
EXHFE19- 4-18SS	186.5	45.25	177	131	26.8	172	1.56
EXHFE19- 4-23SS	186.5	45.25	230	131	26.8	225	1.32
EXHFE19- 4-29SS	186.5	45.25	285	131	26.8	280	1.15
EXHFE19- 6-13SS	186.5	63.25	125	131	44.8	120	1.92
EXHFE19- 6-18SS	186.5	63.25	177	131	44.8	172	1.56
EXHFE19- 6-23SS	186.5	63.25	230	131	44.8	225	1.32
EXHFE19- 6-29SS	186.5	63.25	285	131	44.8	280	1.15
EXHFE19- 8-13SS	186.5	83.25	125	131	64.8	120	1.92
EXHFE19- 8-18SS	186.5	83.25	177	131	64.8	172	1.56
EXHFE19- 8-23SS	186.5	83.25	230	131	64.8	225	1.32
EXHFE19- 8-29SS	186.5	83.25	285	131	64.8	280	1.15
EXHFE19-11-13SS	186.5	108.25	125	131	89.8	120	1.92
EXHFE19-11-18SS	186.5	108.25	177	131	89.8	172	1.56
EXHFE19-11-23SS	186.5	108.25	230	131	89.8	225	1.32
EXHFE19-11-29SS	186.5	108.25	285	131	89.8	280	1.15
EXHFE23- 5-15SS	232	53.5	153	176	34.8	147	1.47
EXHFE23- 5-21SS	232	53.5	213	176	34.8	207	1.2
EXHFE23- 5-27SS	232	53.5	273	176	34.8	267	1.03
EXHFE23- 5-33SS	232	53.5	333	176	34.8	327	0.91
EXHFE23- 8-15SS	232	78.5	153	176	59.8	147	1.47
EXHFE23- 8-21SS	232	78.5	213	176	59.8	207	1.2
EXHFE23- 8-27SS	232	78.5	273	176	59.8	267	1.03
EXHFE23- 8-33SS	232	78.5	333	176	59.8	327	0.91
EXHFE23-10-15SS	232	103.5	153	176	84.8	147	1.47
EXHFE23-10-21SS	232	103.5	213	176	84.8	207	1.2
EXHFE23-10-27SS	232	103.5	273	176	84.8	267	1.03
EXHFE23-10-33SS	232	103.5	333	176	84.8	327	0.91
EXHFE29- 8-23SS	287.5	78.75	234	230	59.5	228	0.97
EXHFE29- 8-30SS	287.5	78.75	304	230	59.5	298	0.82
EXHFE29- 8-38SS	287.5	78.75	384	230	59.5	378	0.71
EXHFE29-13-23SS	287.5	128.75	234	230	109.5	228	0.97
EXHFE29-13-30SS	287.5	128.75	304	230	109.5	298	0.82
EXHFE29-13-38SS	287.5	128.75	384	230	109.5	378	0.71

■ Custom length is available.

■ Grooves for M3 sliding nut are built into the heat-sink top cover and bottom frame (140mm or wider). Optional nut is available.

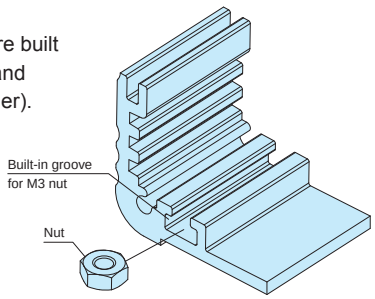

■ Flange bracket is installed as per the diagram below.

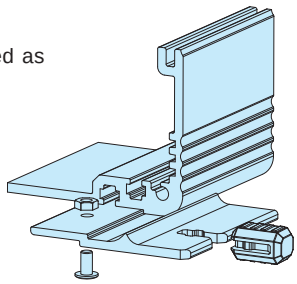

Cross-section view of heat-sink top cover & bottom frame

■ DXF/DWG/PDF/STP drawings available on our website.

EXH • EXHE • EXHF • EXHFE8-3-□

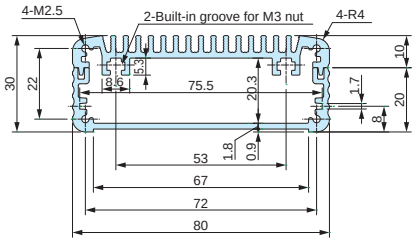

EXH • EXHE • EXHF • EXHFE8-4-□

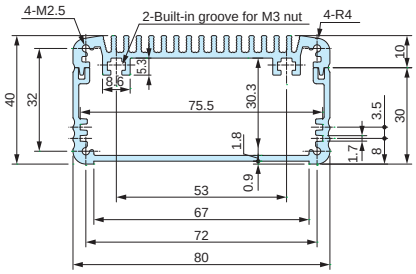

EXH • EXHE • EXHF • EXHFE8-6-□

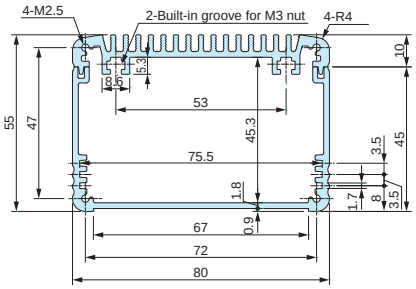

EXH • EXHE • EXHF • EXHFE11-3-□

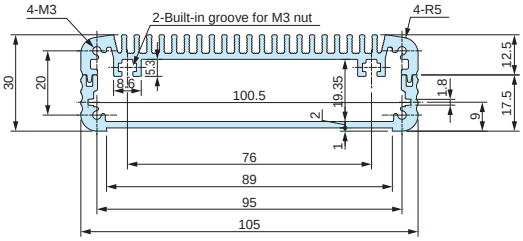

EXH • EXHE • EXHF • EXHFE11-5-□

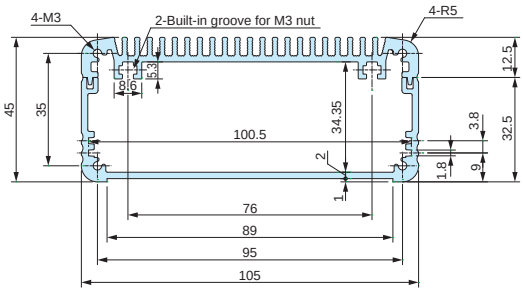

EXH • EXHE • EXHF • EXHFE11-6-□

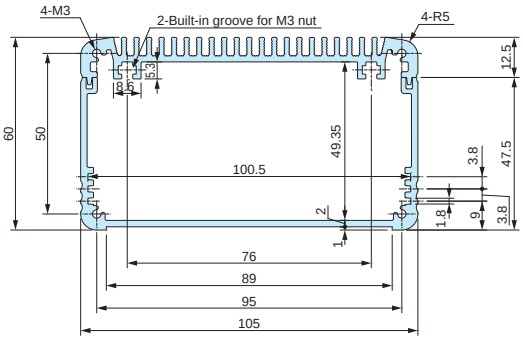

EXH • EXHE • EXHF • EXHFE14-4-□

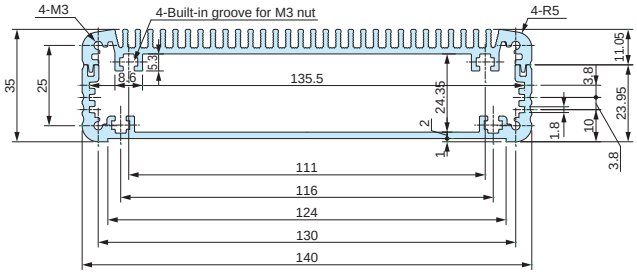

EXH • EXHE • EXHF • EXHFE14-5-□

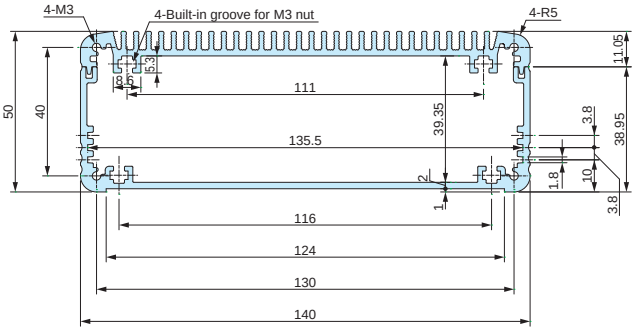

EXH • EXHE • EXHF • EXHFE14-7-□

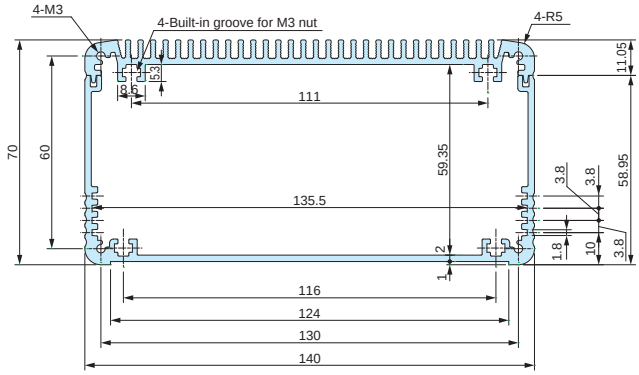

EXH • EXHE • EXHF • EXHFE14-9-□

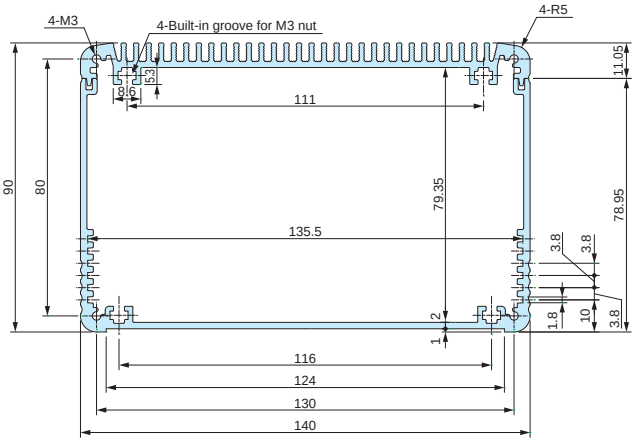

EXH • EXHE • EXHF • EXHFE19-4-□

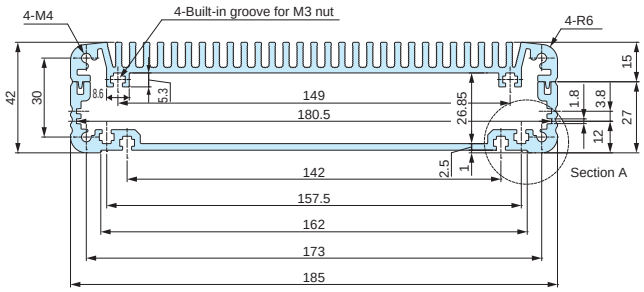

EXH • EXHE • EXHF • EXHFE19-6-□

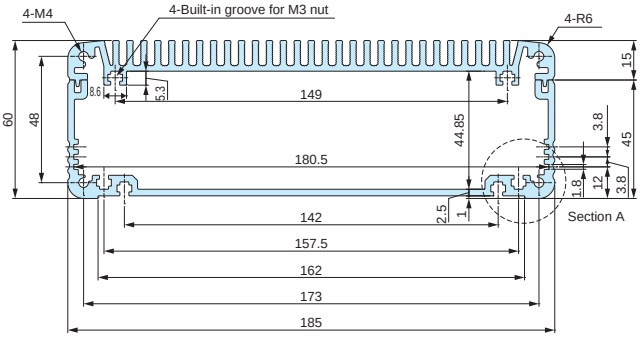

EXH • EXHE • EXHF • EXHFE19-8-□

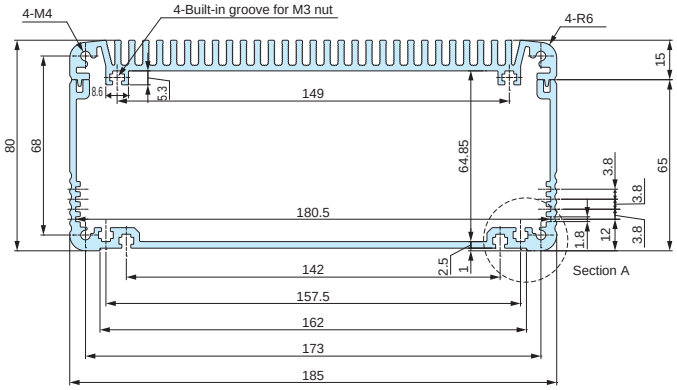

EXH • EXHE • EXHF • EXHFE19-11-□

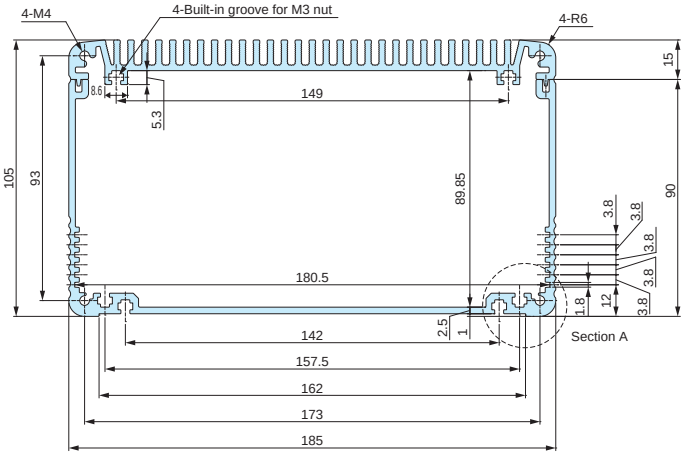

EXH • EXHE • EXHF • EXHFE23-5-□

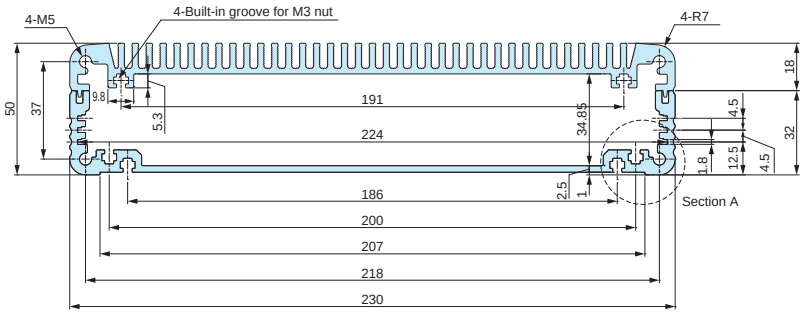

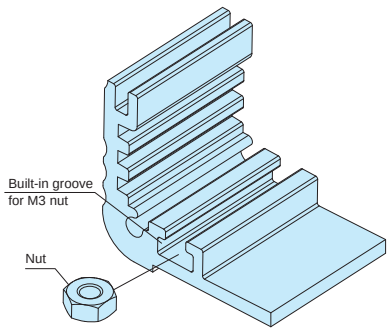

EXH • EXHE • EXHF • EXHFE23-8-□

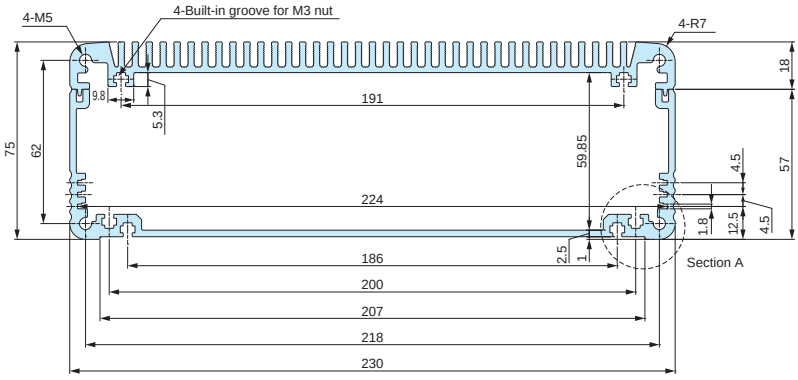

■ Optional M3 nut is available.

Sliding nut can be used on all EXH • EXHE • EXHF • EXHFE models with width 140mm or larger bottom covers, as well as all heat-sink top covers.

See page 221 for MT-3N optional M3 nut.

*See page 253 for detailed dimensions for Section A

Cross-section view of heat-sink top cover & bottom frame

■ DXF/DWG/PDF/STP drawings available on our website.

EXH • EXHE • EXHF • EXHFE23-10-□

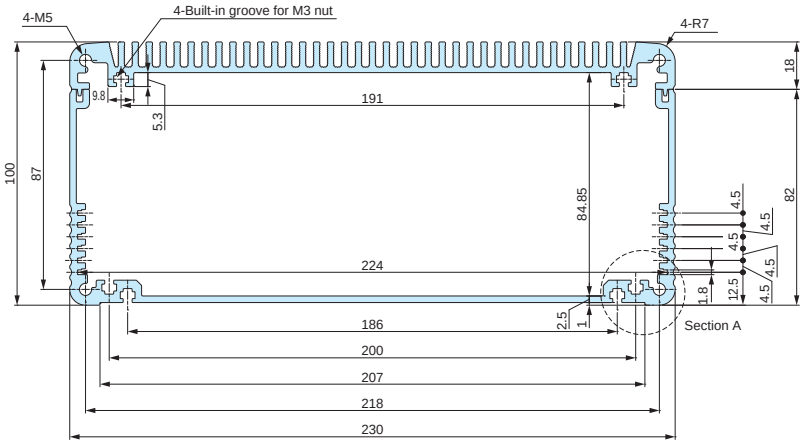

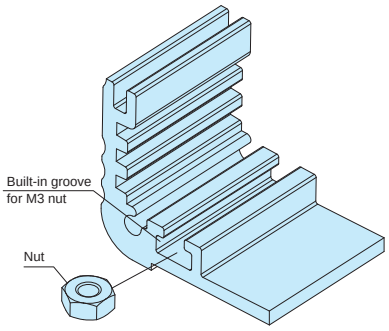

■ Optional M3 nut is available.

Sliding nut can be used on all EXH • EXHE • EXHF • EXHFE models with width 140mm or larger bottom covers, as well as all heat-sink top covers.

See page 221 for MT-3N optional M3 nut.

EXH • EXHE • EXHF • EXHFE29-8-□

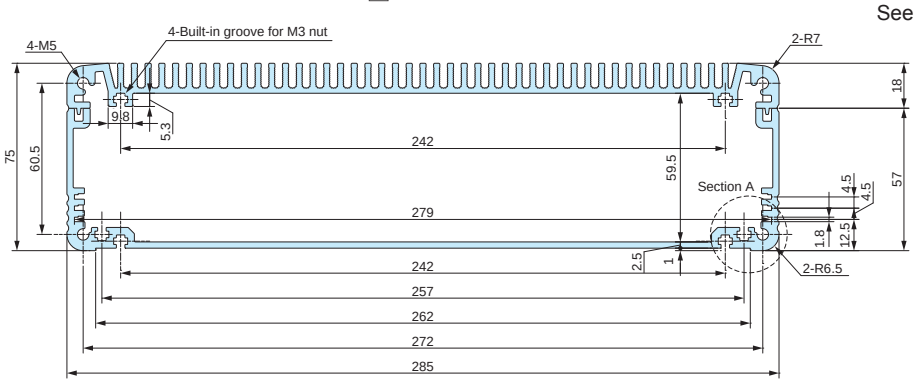

EXH • EXHE • EXHF • EXHFE29-13-□

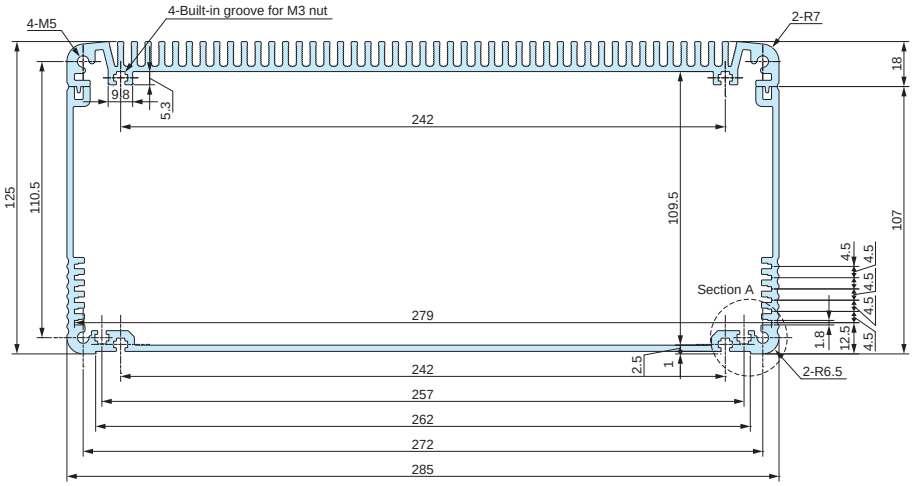

Flange bracket dimensions
(Section A)

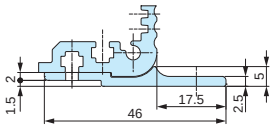

EF series WALL MOUNTING BRACKET for EX • EXH • EXHE

NEW SIZE

Installation Example

- Wall mounting bracket for EX, EXH, and EXHE series. Applicable only for width 185, 230, and 285mm bottom covers.
- Easy installation by inserting the nuts into built-in grooves on EX, EXH, and EXHE bottom cover.
- Rubber feet are included to hide the mounting cutouts when not used for wall mounting, and act as feet stabilizers for desktop use.

EF dimensions

- DXF/DWG/PDF/STP drawings available on our website.

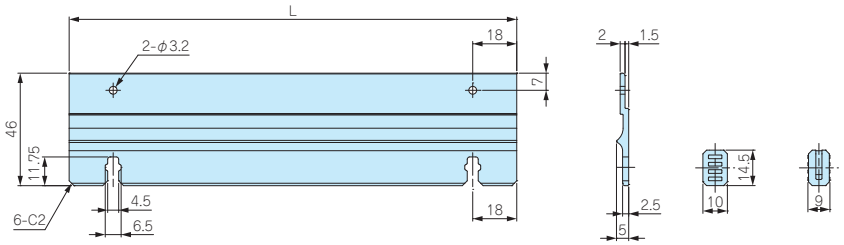

Assembly Drawings

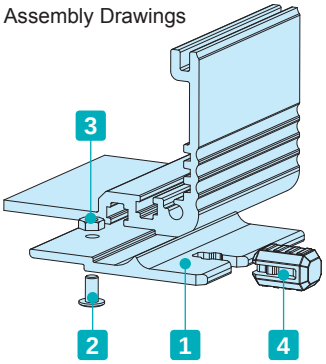

Components

No.	Part name	Pcs	Material	Color / Finish
1	Bracket	2	Extruded aluminium A6063S-T5	Metallic silver / Painted • Black / Anodized
2	Screw	4	Steel	Black trivalent chromate
3	Nut	4	Steel	Black trivalent chromate
4	Rubber feet	4	Silicone	Black

Product no. / Dimensions

Product no.		L	Suitable models
● Metallic silver	● Black		
EF19-13S	EF19-13B	119.5	EX • EXH • EXHE19-□-13
EF19-18S	EF19-18B	171.5	EX • EXH • EXHE19-□-18
EF19-23S	EF19-23B	224.5	EX • EXH • EXHE19-□-23
EF19-29S	EF19-29B	279.5	EX • EXH • EXHE19-□-29
EF23-15S	EF23-15B	146.5	EX • EXH • EXHE23-□-15
EF23-21S	EF23-21B	206.5	EX • EXH • EXHE23-□-21
EF23-27S	EF23-27B	266.5	EX • EXH • EXHE23-□-27
EF23-33S	EF23-33B	326.5	EX • EXH • EXHE23-□-33
NEW EF29-23S	NEW EF29-23B	227.5	EX • EXH • EXHE29-□-23
NEW EF29-30S	NEW EF29-30B	297.5	EX • EXH • EXHE29-□-30
NEW EF29-38S	NEW EF29-38B	377.5	EX • EXH • EXHE29-□-38

HQ SERIES IP67 EMC SHIELDED DIECAST ALUMINIUM BOX

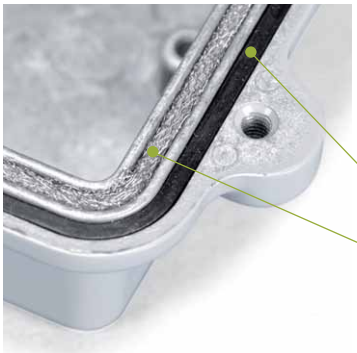

Technical Data
Protection class : IP67 Operating temperature : -40°C ~ +105°C Recommended torque : 1N • m

- A double gasket construction allows both IP67 protection and EMC shielding to be possible.
- 13 different sizes available with 2 different finish types.
- Suitable for CATV terminal, fiber optic transmitter, FA controller, and so on.
- Available in powder coated model and unfinished model.

APPLICATION EXAMPLE

CATV OPTICAL NODE

LPWA OUTDOOR GATEWAY

WIFI ACCESS POINT

Accessories (Optional parts)

Mounting bracket HQF series
See page HQ-7

Pole Mounting bracket SSK series
See page SSK-M-1 ~ SSK-M-3

Mounting plate HQP series
See page HQ-8

Mountng screw MT series
See page HQ-7

Cable gland
See cable gland pages

Protective vent PMF series
See PMF pages

Product no. / Dimensions

Product no.		Dimensions			Weight (g)
● Light gray	○ Unfinished	W	D	H	
HQ10-10- 5G	HQ10-10- 5N	96.3	96.8	45	302
HQ10-10- 7G	HQ10-10- 7N	96.8	96.8	67	335
HQ15-10- 5G	HQ15-10- 5N	150	100	50	442
HQ15-10- 8G	HQ15-10- 8N	150	99.5	75	494
HQ16-16- 6G	HQ16-16- 6N	162	162	55	626
HQ16-16- 8G	HQ16-16- 8N	162	162	80	715
HQ19-10- 5G	HQ19-10- 5N	192	96	45	507
HQ19-10- 7G	HQ19-10- 7N	192	96	67	590
HQ20-15- 5G	HQ20-15- 5N	200	150	50	753
HQ20-15- 8G	HQ20-15- 8N	200	150	75	849
HQ26-18- 6G	HQ26-18- 6N	262	181.5	55	961
HQ27-17- 7G	HQ27-17- 7N	274.2	173.2	66	1,129
HQ27-17-10G	HQ27-17-10N	274.2	172.7	100	1,287

HQ dimensions

HQ10-10-5
HQ10-10-7

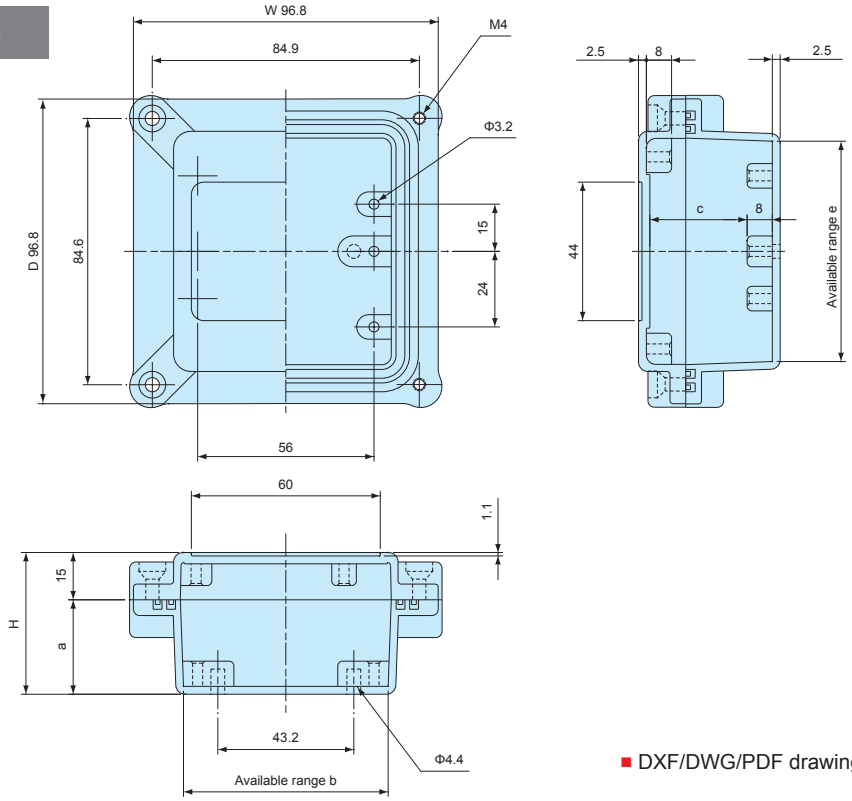

■ DXF/DWG/PDF drawings available on our website.

Product no.	W	D	H	a	b	c	e
HQ10-10- 5	96.3	96.8	45	30	64	30.9	69
HQ10-10- 7	96.8	96.8	67	52	64	52.9	69

HQ dimensions

■ DXF/DWG/PDF drawings available on our website.

HQ15-10-5
HQ15-10-8

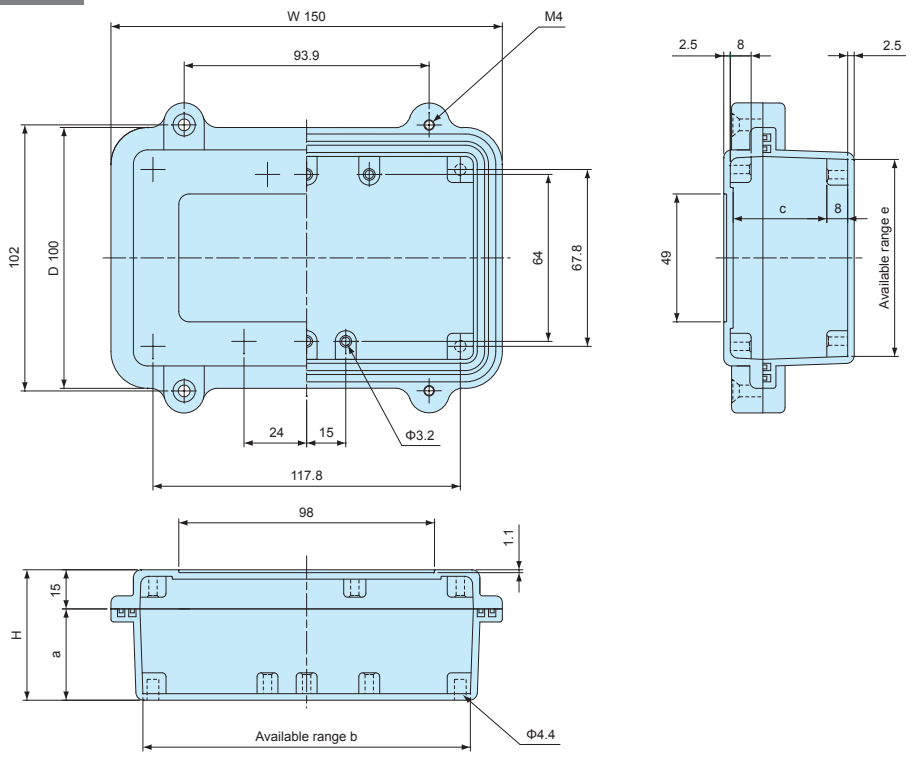

Product no.	W	D	H	a	b	c	e
HQ15-10- 5	150	100	50	35	125.5	35.9	75.5
HQ15-10- 8	150	99.5	75	60	123.7	60.9	73.7

HQ16-16-6
HQ16-16-8

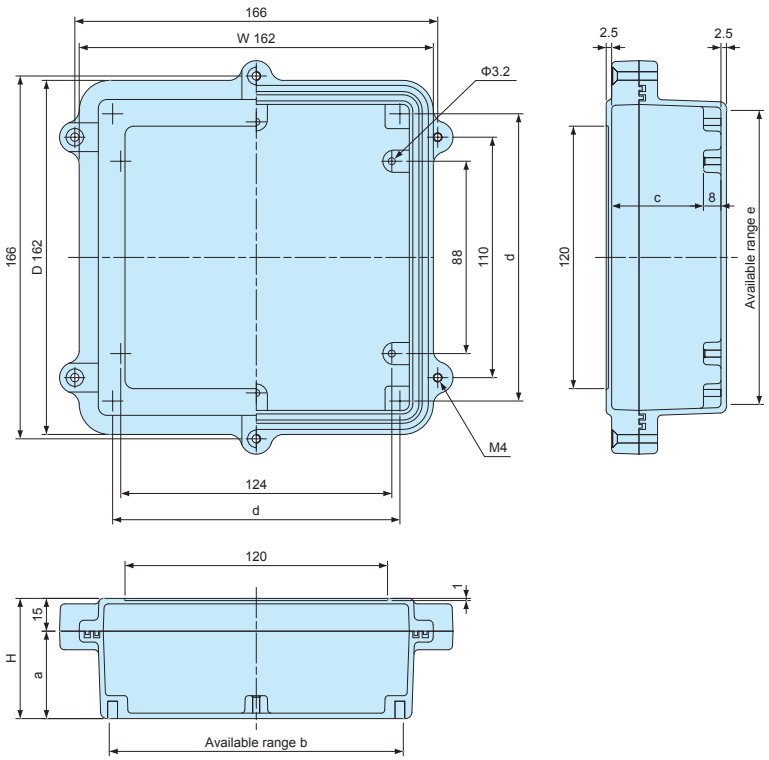

Product no.	W	D	H	a	b	c	d	e
HQ16-16- 6	162	162	55	40	134.5	42	131.41	134.5
HQ16-16- 8	162	162	80	65	132.7	67	129.66	132.7

HQ dimensions

■ DXF/DWG/PDF drawings available on our website.

HQ19-10-5
HQ19-10-7

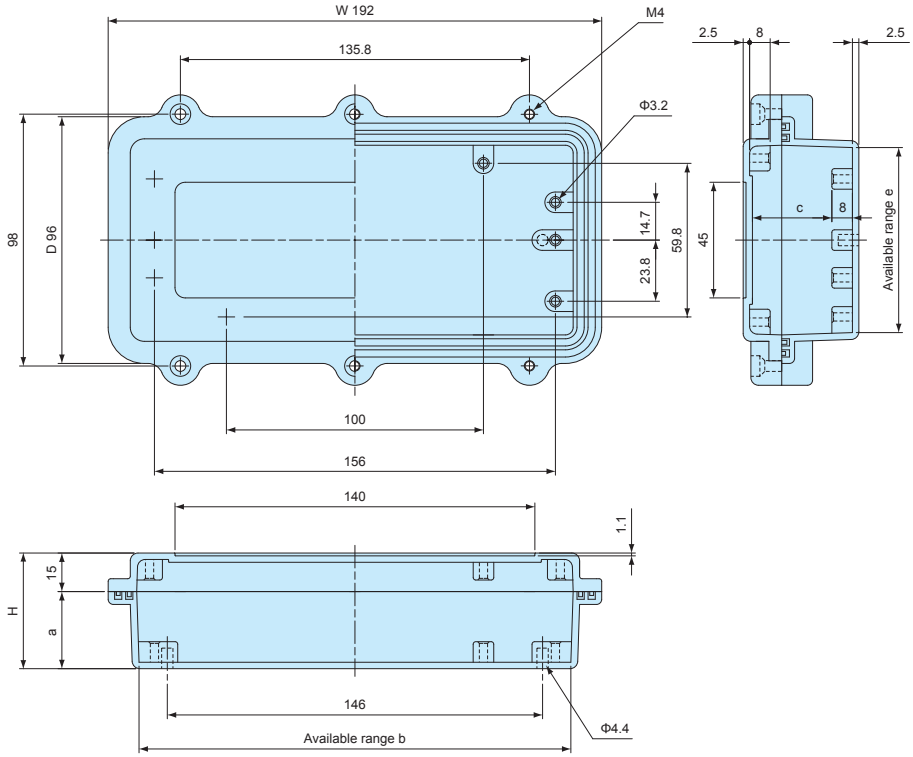

Product no.	W	D	H	a	b	c	e
HQ19-10- 5	192	96	45	30	168	30.9	72
HQ19-10- 7	192	96	67	52	166.6	52.9	70.6

HQ20-15-5
HQ20-15-8

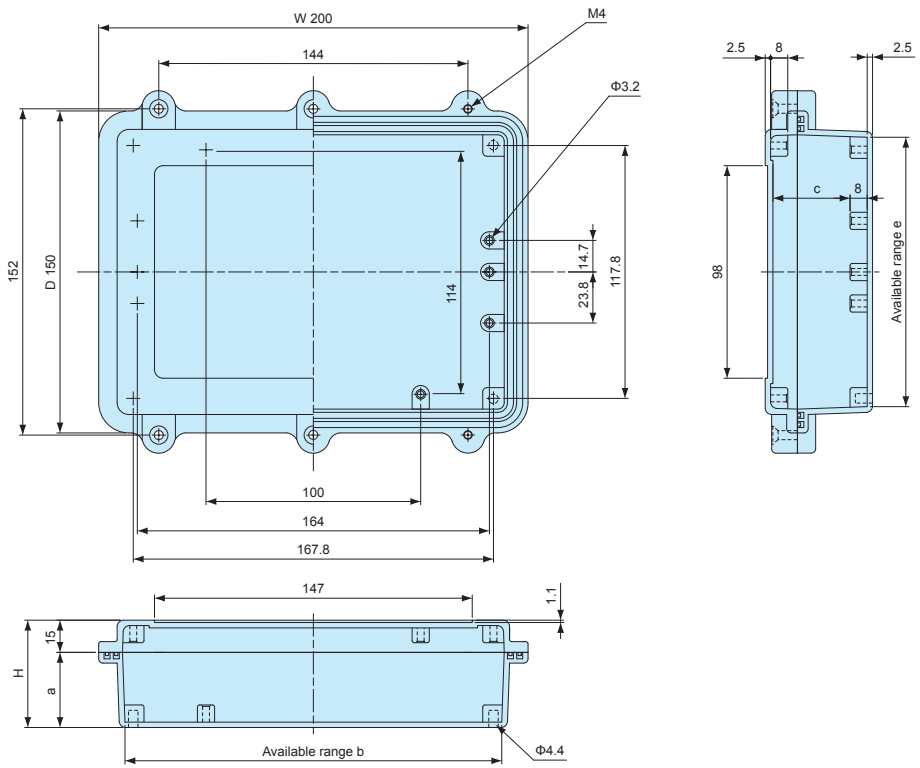

Product no.	W	D	H	a	b	c	e
HQ20-15- 5	200	150	50	35	175.5	35.9	125.5
HQ20-15- 8	200	150	75	60	173.7	60.9	123.7

HQ dimensions

■ DXF/DWG/PDF drawings available on our website.

HQ26-18-6

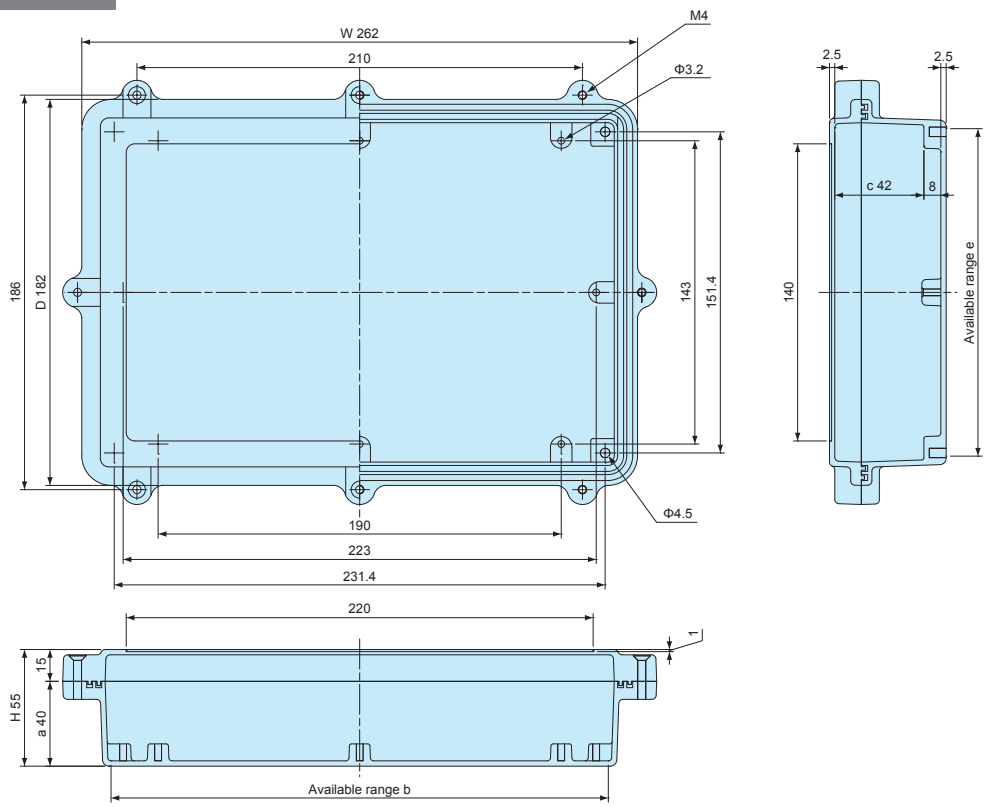

Product no.	W	D	H	a	b	c	e
HQ26-18- 6	262	181.5	55	40	234.4	42	154.4

HQ27-17- 7
HQ27-17-10

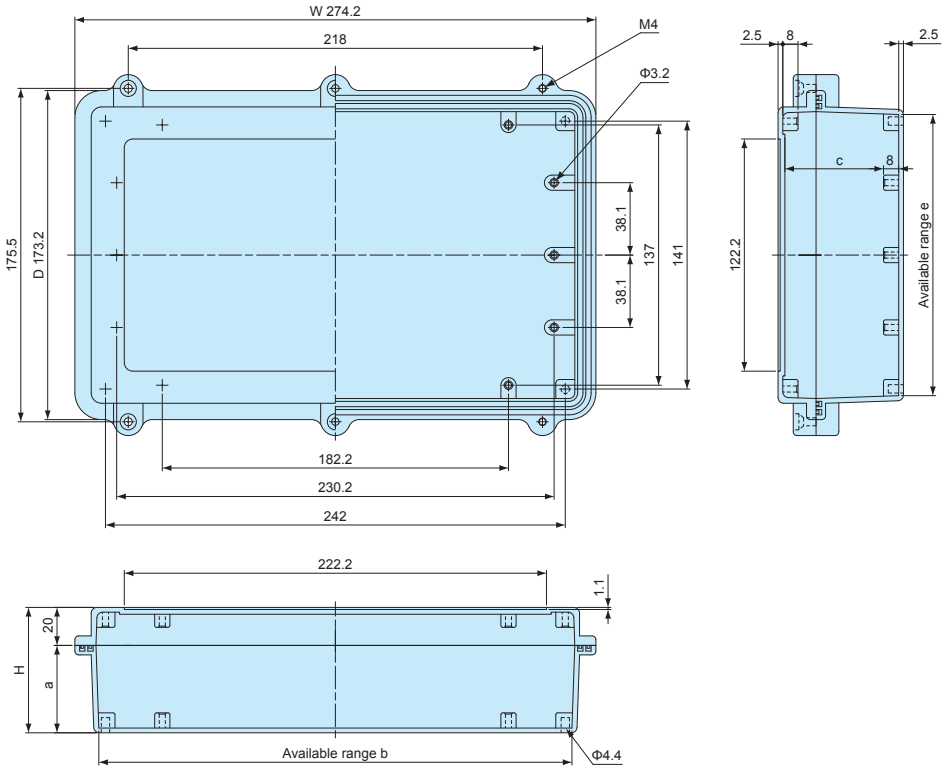

Product no.	W	D	H	a	b	c	e
HQ27-17- 7	274.2	173.2	66	46	249	51.9	148
HQ27-17-10	274.2	172.7	100	80	249	85.9	148

EMI SHIELDING TEST DATA

Test Result by Gestek

Date : 2007/12/20

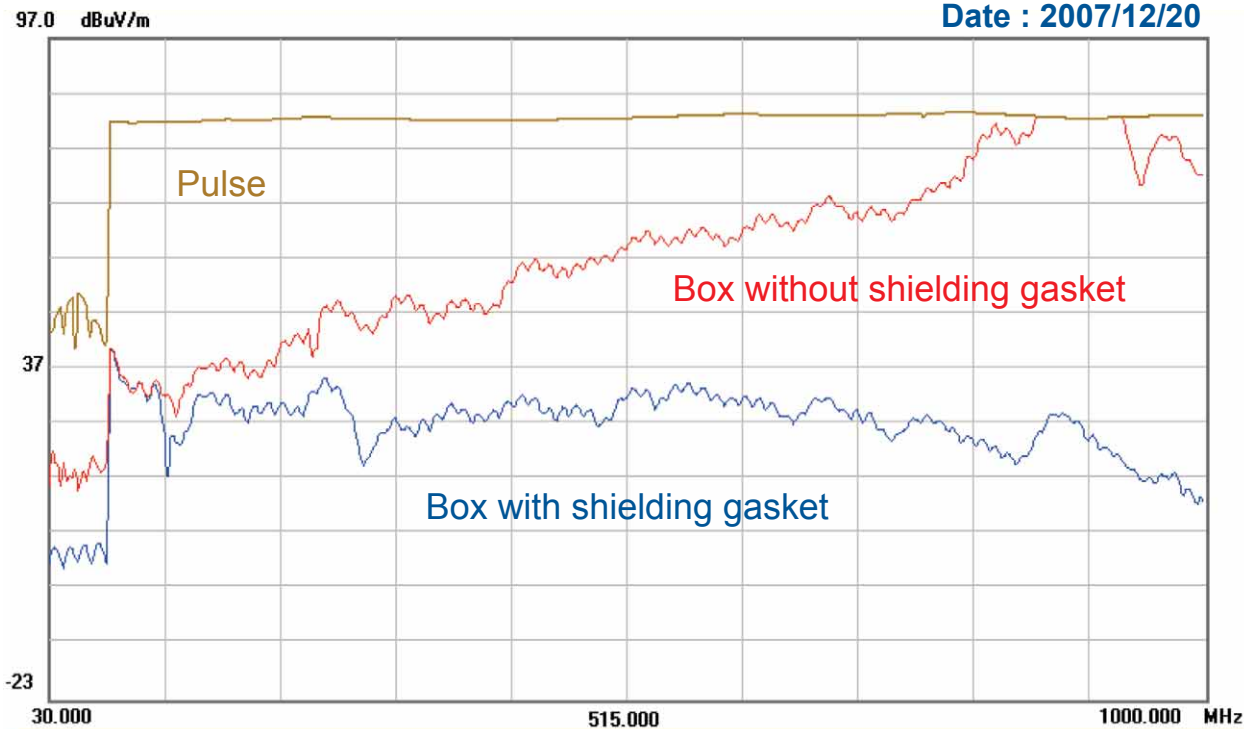

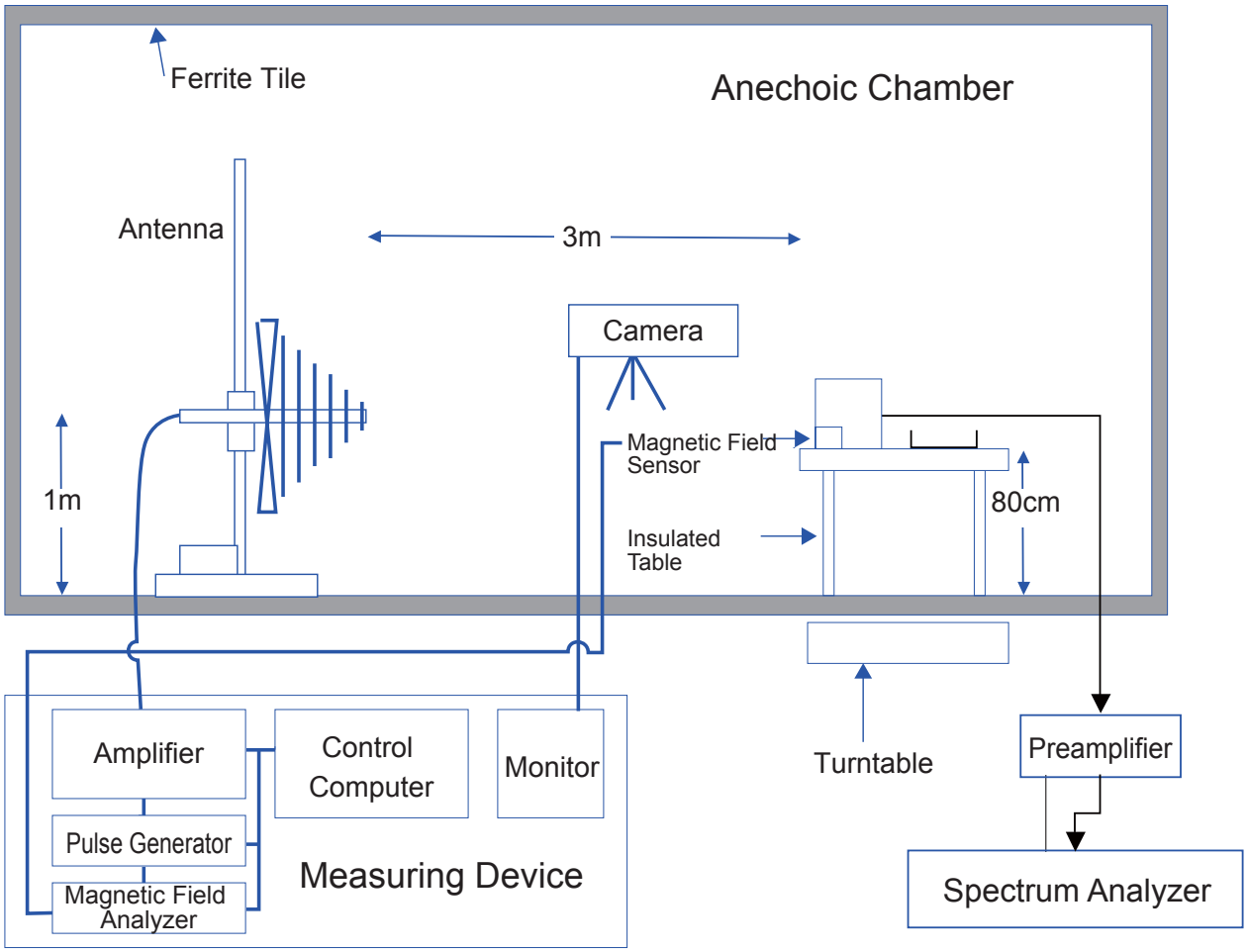

HQF SERIES MOUNTING BRACKET for HQ

■ DXF/DWG/PDF drawings available on our website.

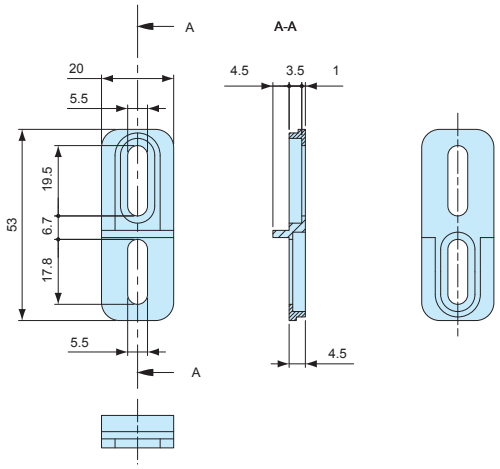

Components

Part name	Pcs	Material	Color / Finish
Mounting bracket	4	Diecast aluminium ADC12	Powder coated • Unfinished
Screw	4	Stainless steel	Unfinished

Product no. / Feature

Product no.	Color / Finish	Suitable box	Pack of
HQF-1G	Light gray / Powder coated	HQ all models	4
HQF-1N	Unfinished	HQ all models	4

MT SERIES MOUNTING SCREW for HQ

Product no. / Feature

Product no.	Material	Color / Finish	Pack of
MT3.5-8K	Steel	Trivalent chromate	4

HQG SERIES WATERPROOF GASKET for HQ

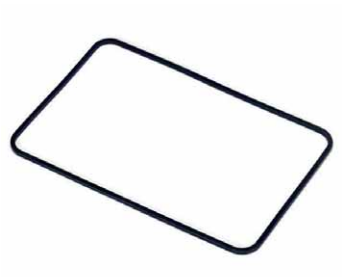

Product no. / Suitable box

Product no.	Suitable box
HQG1010	HQ10-10-□
HQG1510	HQ15-10-□
HQG1616	HQ16-16-□
HQG1910	HQ19-10-□
HQG2015	HQ20-15-□
HQG2618	HQ26-18-□
HQG2717	HQ27-17-□

■ Material : Silicone

HQE SERIES SHIELDING GASKET for HQ

EMC Shielding Effects

Product no. / Suitable box

Product no.	Suitable box
HQE1010	HQ10-10-□
HQE1510	HQ15-10-□
HQE1616	HQ16-16-□
HQE1910	HQ19-10-□
HQE2015	HQ20-15-□
HQE2618	HQ26-18-□
HQE2717	HQ27-17-□

■ Material : Stainless steel • Silicone (White)

HQP SERIES MOUNTING PLATE for HQ

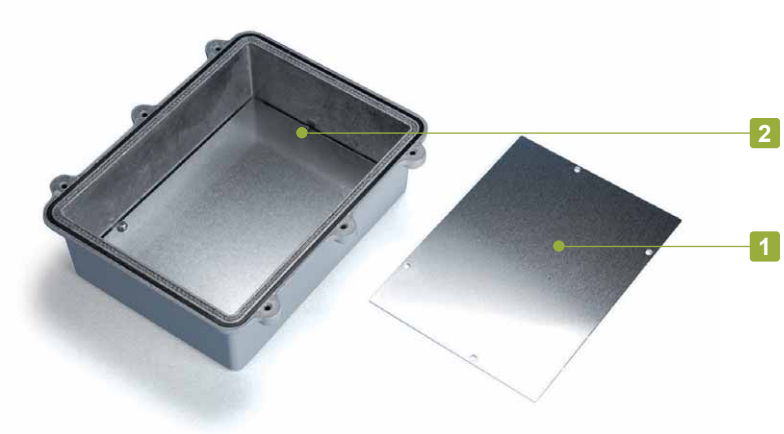

Components

No.	Part name	Pcs	Material	Color / Finish
1	Mounting plate	1	Aluminium A1050P t = 1.5	Unfinished
2	Screw (MT3.5-8K)	4	Steel	Trivalent chromate

■ Drawings below are reference examples only.
DXF/DWG/PDF drawings available on our website.

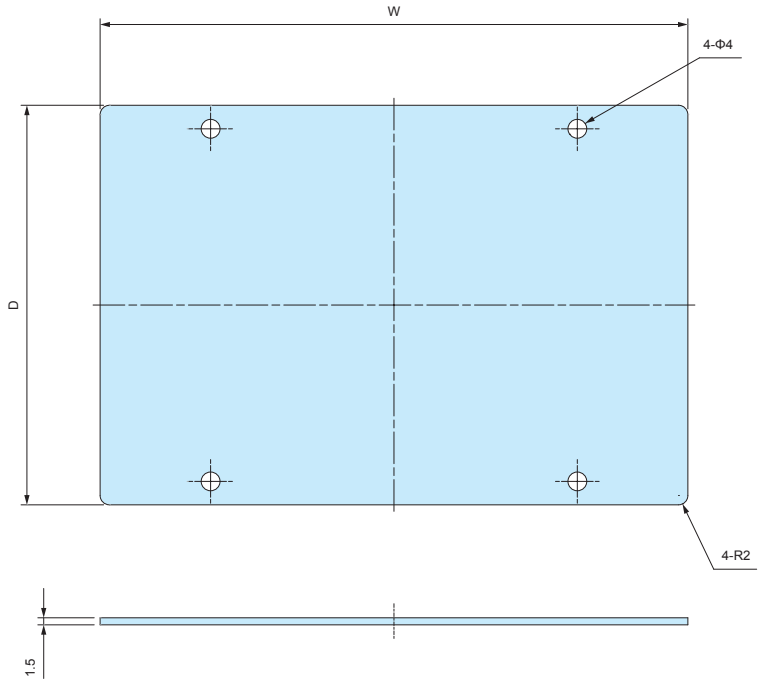

Product no. / Dimensions

Product no.	W	D	Suitable box
HQP10-10	63	68	HQ10-10-5 • HQ10-10-7
HQP15-10	122	72	HQ15-10-5 • HQ15-10-8
HQP16-16	132	132	HQ16-16-6 • HQ16-16-8
HQP19-10	166	70	HQ19-10-5 • HQ19-10-7
HQP20-15	172	122	HQ20-15-5 • HQ20-15-8
HQP26-18	235	155	HQ26-18-6
HQP27-17	248	147	HQ27-17-7 • HQ27-17-10

BDN series IP67 DIECAST ALUMINIUM BOX

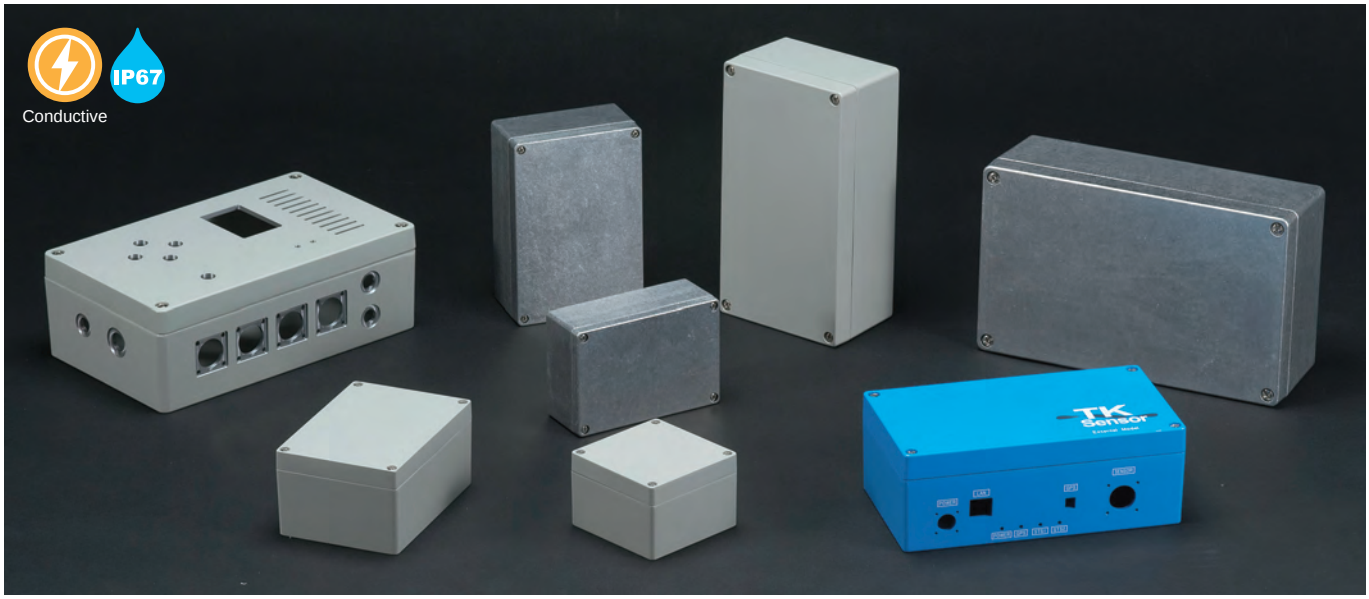

Technical Data

Protection class: IP67
Operating temperature: -40°C ~ +105°C
Recommended torque: 1.0N • m (10kgf • cm)

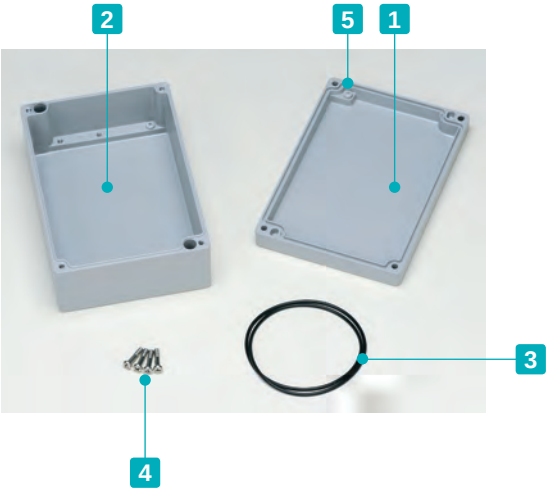

- 8 different sizes available for both light gray powder coated and unfinished models.
- O-ring gasket is good for maintaining both waterproof and dustproof functionality.
- Shock resistant diecast aluminium box.
- Conductivity can be achieved by utilization of the contact between the unfinished inner surfaces (only applicable to "N" type).

Components

No.	Part name	Pcs	Material	Color / Finish
1	Top cover	1	Diecast aluminium ADC12	Light gray / Powder coated • Natural / Unfinished
2	Base	1	Diecast aluminium ADC12	Light gray / Powder coated • Natural / Unfinished
3	O-ring gasket	1	Silicone	Black
4	Screw	4	Stainless steel	Unfinished
5	Earthing screw	2	Steel M4-5 pan head	Nickel plated

Accessories (Optional parts)

Wall mounting bracket CK series
See website

Mounting plate FTB series
See website

Pole mounting bracket SSK series
See website

DIN-Rail FDR series
See website

Cable gland
See page 333 ~ 340

BDN dimensions

■ DXF/DWG/PDF drawings available on our website.

BDN 6-8-5

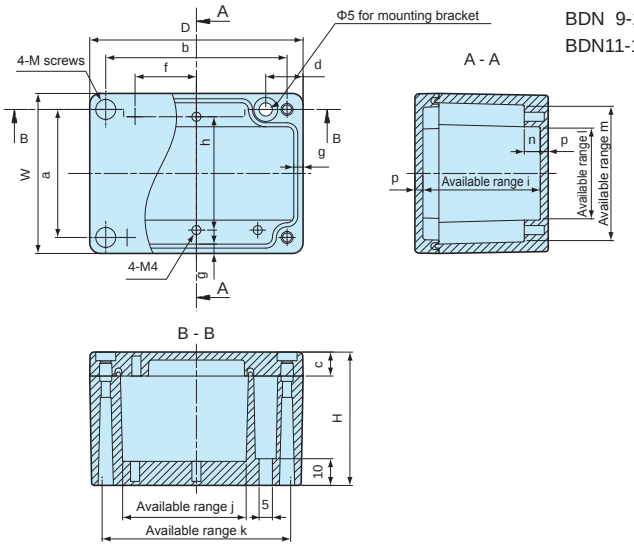

BDN 7-10-4
BDN 9-13-5
BDN11-16-6

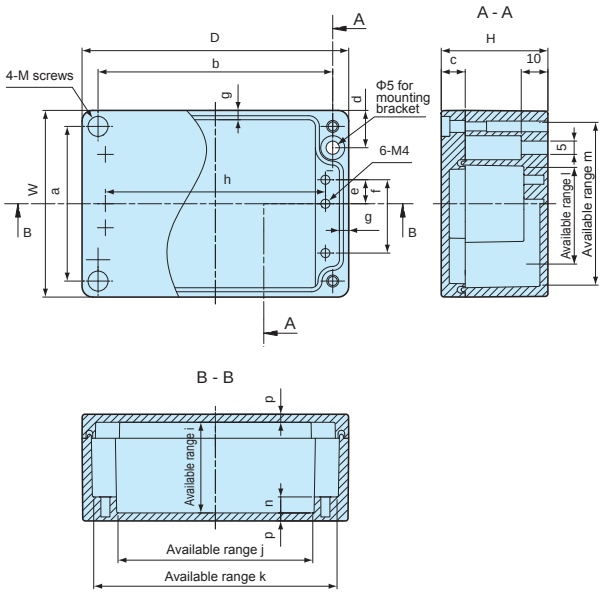

BDN 9- 9-6
BDN10-14-7
BDN12-22-8
BDN16-26-9

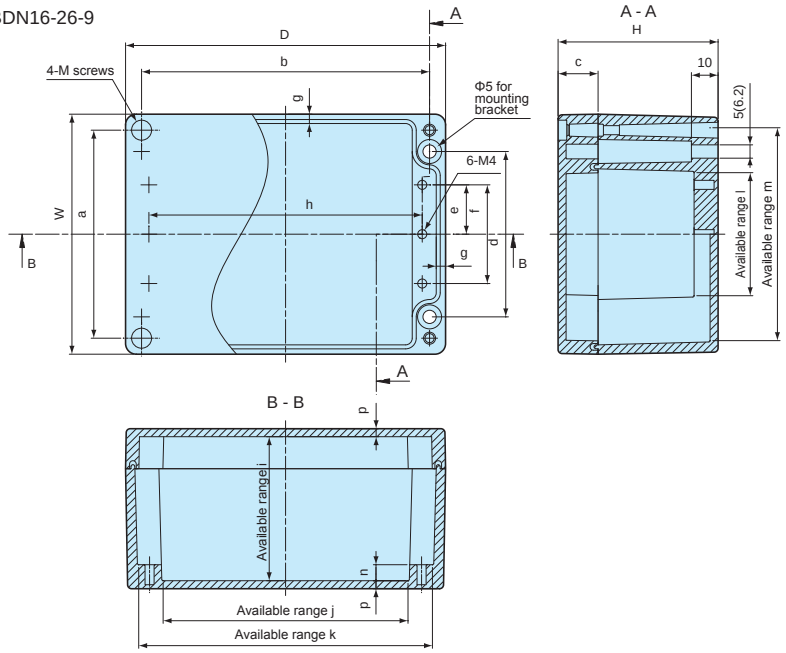

※Dimension in ( ) = BDN12-22-8
BDN16-26-9

Product no. / Dimensions

Product no.		Dimensions						Weight (g)
● Light gray	○ Natural Conductive	W	D	H	a	b	c	
BDN 6- 8-5G	BDN 6- 8-5N	60	80	50	48	68	9	240
BDN 7-10-4G	BDN 7-10-4N	70	100	40	58	88	9	250
BDN 9- 9-6G	BDN 9- 9-6N	90	90	60	78	78	15	395
BDN 9-13-5G	BDN 9-13-5N	90	130	50	78	118	9	420
BDN10-14-7G	BDN10-14-7N	100	140	70	88	128	15	635
BDN11-16-6G	BDN11-16-6N	110	160	60	98	148	15	640
BDN12-22-8G	BDN12-22-8N	120	220	80	105	205	20	1,155
BDN16-26-9G	BDN16-26-9N	160	260	90	140	240	20	2,145

Product no.		Dimensions												
● Light gray	○ Natural Conductive	d	e	f	g	h	i	j	k	ℓ	m	n	p	M
BDN 6- 8-5G	BDN 6- 8-5N	14	–	23	3.5	42.5	44	45	71	33	51	6	3	M4
BDN 7-10-4G	BDN 7-10-4N	14	11	31	3	85	34	75	92.5	38	62.5	6	3	M4
BDN 9- 9-6G	BDN 9- 9-6N	62	18.5	37	3.5	72	54	62	80	45	80	6	3	M4
BDN 9-13-5G	BDN 9-13-5N	14	19	47.5	3.5	112.5	44	104	121	56	81	6	3	M4
BDN10-14-7G	BDN10-14-7N	72	24	48	3.5	121	64	111	130	56	90	6	3	M4
BDN11-16-6G	BDN11-16-6N	14	29	67.5	3.5	142.5	54	134	151	76	101	6	3	M4
BDN12-22-8G	BDN12-22-8N	84.6	28	56	3.9	196	74	183	206	62	105	6	3	M5
BDN16-26-9G	BDN16-26-9N	110	36	72	4.8	230	82	216	247	87	146	9	4	M6

FTB SERIES

MOUNTING PLATE for BDN

FTB 5-7

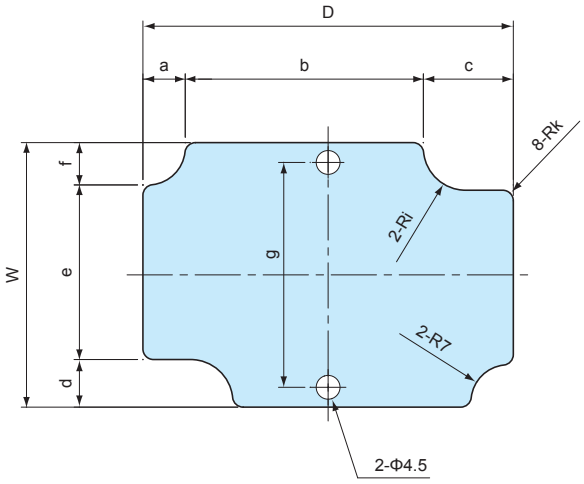

FTB 6-9

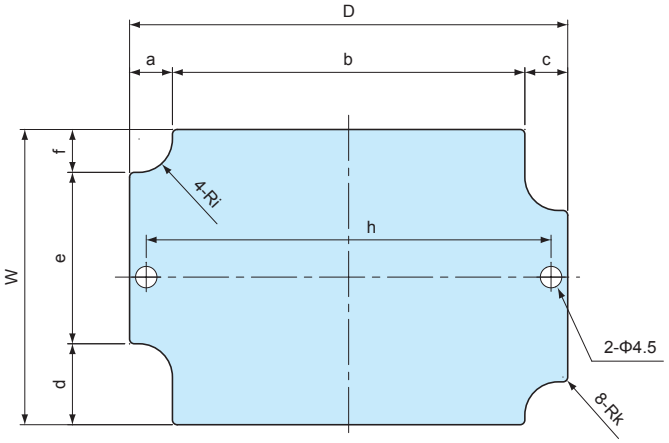

FTB 8-12
FTB10-15

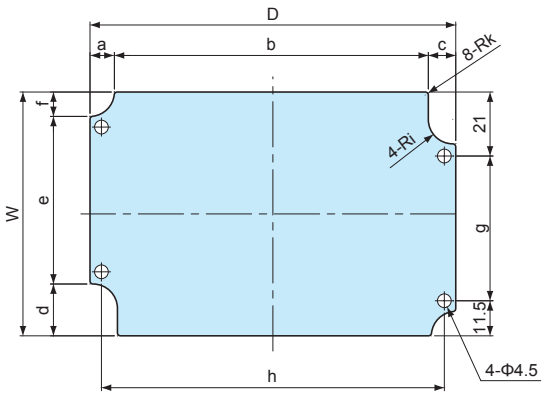

FTB 8- 8 FTB10-20
FTB 9-13 FTB14-24

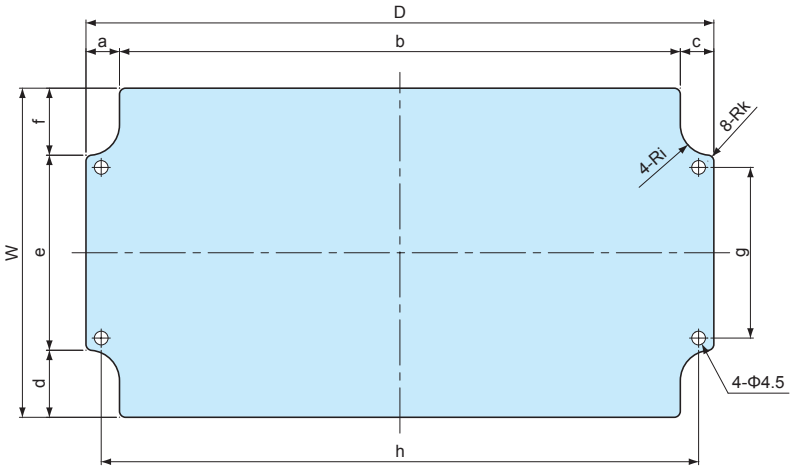

Material	Color / Finish
Aluminium A1050P t = 1.5	Silver / Anodized

Product no. / Dimensions

Product no.	Suiteble box	W	D	a	b	c	d	e	f	g	h	i	k
FTB 5- 7	BDN 6- 8-5	50	70	8	45	17	9	33	8	42.5	–	8	2
FTB 6- 9	BDN 7-10-4	62	92	9	74	9	17	36	9	–	85	7	1
FTB 8- 8	BDN 9- 9-6	80	80	9	62	9	17	46	17	37	72.5	8	2
FTB 8-12	BDN 9-13-5	80	120	8	103	9	17	55	8	47.5	112.5	8	1
FTB 9-13	BDN10-14-7	89	129	9	111	9	17	55	17	48	121	8.5	2
FTB10-15	BDN11-16-6	100	150	8	133	9	17	75	8	67.5	142.5	8	1
FTB10-20	BDN12-22-8	108	206	11	184	11	22	64	22	56	196	10	2
FTB14-24	BDN16-26-9	144	244	15	214	15	30	84	30	72	230	12	3

SSB SERIES IP65 STAINLESS STEEL BOX - SCREWED TYPE

IP65

Conductive

Technical Data
Protection class: IP65 Operating temperature: -40°C ~ +90°C Recommended torque : 2N • m

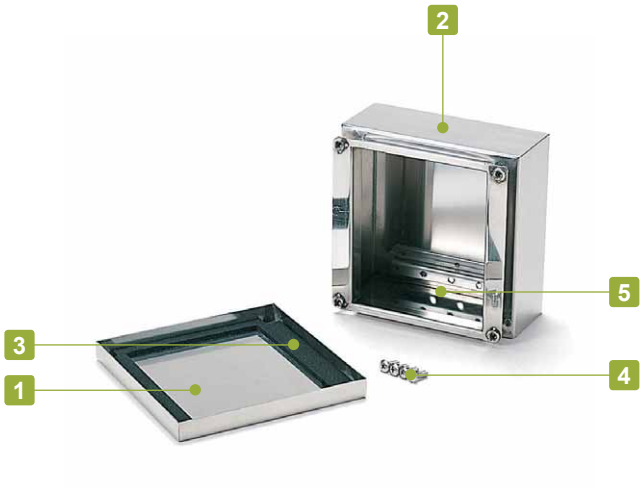

- IP65 enclosure, cover screw type.
- Made of stainless steel (SUS304) for superior weather and corrosion resistance.
- Conductive box for EMC shielding.
- Polished finish.

Components

No.	Part name	Pcs	Material	Color / Finish
1	Cover	1	Stainless steel SUS304 t = 1.2	Polished finish
2	Body	1	Stainless steel SUS304 t = 1.2	Polished finish
3	Gasket	1	EPDM	Black
4	Screw (M5-12 Truss head)	4	Stainless steel	Unfinished
5	Z-Mounting bracket	2	Stainless steel SUS304 t = 1.5	Unfinished

Accessories (Optional parts)

Mounting plate SSC series
See page SSC • FDR-1

Cable gland
See cable gland pages

Pole mounting belt PKB series
See page PKB-1

Pole mounting bracket SSK series
See page SSK-M-1 ~ SSK-M-3

SSB dimensions

■ Drawings below are reference examples only.
DXF/DWG/PDF drawings available on our website.

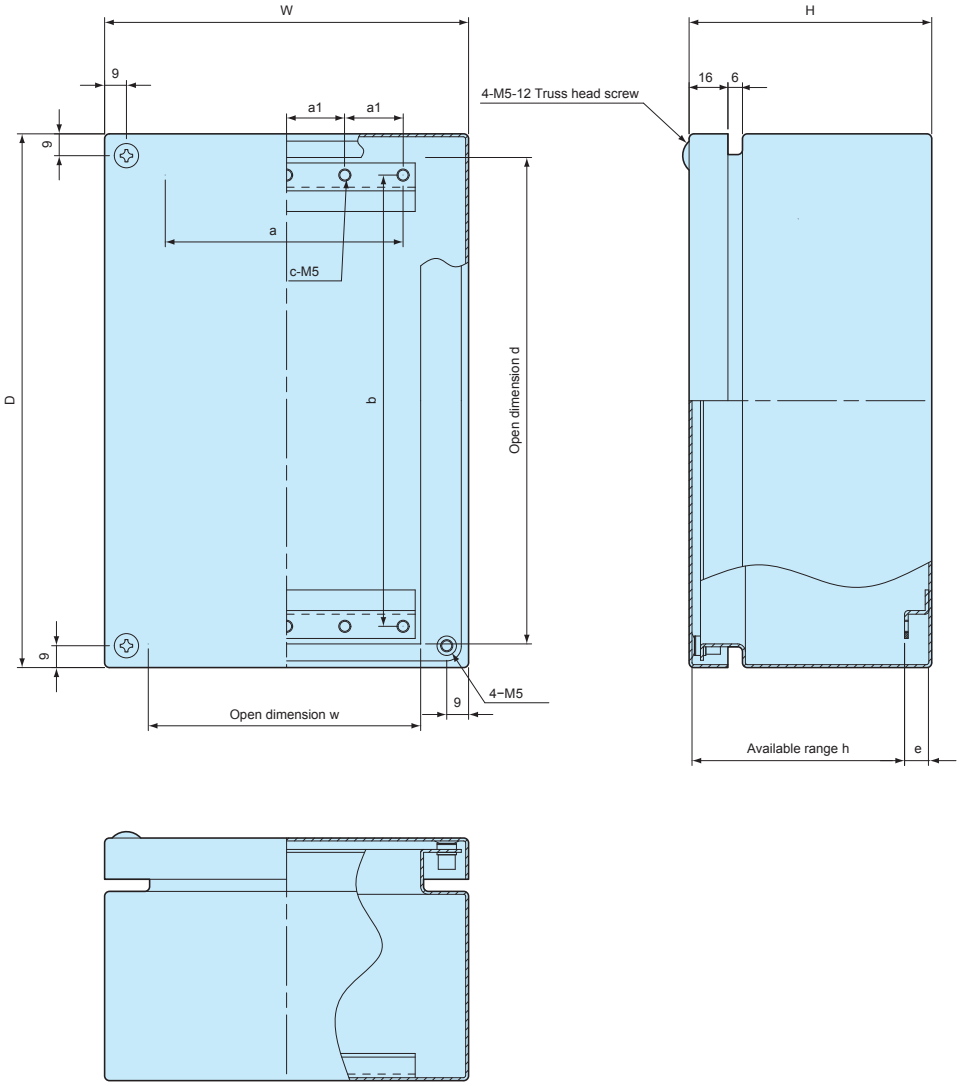

Product no. / Dimensions

Product no.	W	D	H	w	d	h	a	a1	b	c	e	Weight (kg)
SSB121508	120	150	80	80.5	130.5	67.6	66	33	116	6	10	0.9
SSB151508	150	150	80	110.5	130.5	67.6	96	24	116	10	10	1.1
SSB152206	150	220	60	110.5	200.5	51.1	96	24	186	10	6.5	1.3
SSB152210	150	220	100	110.5	200.5	87.6	96	24	186	10	10	1.6
SSB202010	200	200	100	160.5	180.5	87.6	146	36.5	166	10	10	1.8
SSB202806	200	280	60	160.5	260.5	51.1	146	36.5	246	10	6.5	1.9
SSB202812	200	280	120	160.5	260.5	107.6	146	36.5	246	10	10	2.5
SSB223312	220	330	120	180.5	310.5	107.6	166	41.5	296	10	10	2.9
SSB304015	300	400	150	260.5	380.5	137.6	246	61.5	366	10	10	4.7

SSM SERIES IP65 STAINLESS STEEL BOX - LATCH-HINGED TYPE

IP65

Conductive

Technical Data
Protection class: IP65 Operating temperature: -40°C ~ +90°C

- IP65 enclosure with easy open/close key latch/hinge.
- Made of stainless steel (SUS304) for superior weather and corrosion resistance.
- Conductive box for EMC shielding.
- Polished finish.
- Key latch for tamper-proof purposes.

Components

No.	Part name	Pcs	Material	Color / Finish
1	Cover	1	Stainless steel SUS304 t = 1.2	Polished finish
2	Body	1	Stainless steel SUS304 t = 1.2	Polished finish
3	Hinge	2	Stainless steel SUS304 t = 1.2	Barrel finish
4	Gasket	1	EPDM	Black
5	Latch (with key)	2	Stainless steel SUS304 t = 1.2	Barrel finish
6	Z-Mounting bracket	2	Stainless steel SUS304 t = 1.5	Unfinished
7	Key	2	Steel SPCC	Nickel plated

Accessories (Optional parts)

Mounting plate SSC series
See page SSC • FDR-1

Cable gland
See cable gland pages

Pole mounting belt PKB series
See page PKB-1

Pole mounting bracket SSK series
See page SSK-M-1 ~ SSK-M-3

SSM dimensions

■ Drawings below are reference examples only.
DXF/DWG/PDF drawings available on our website.

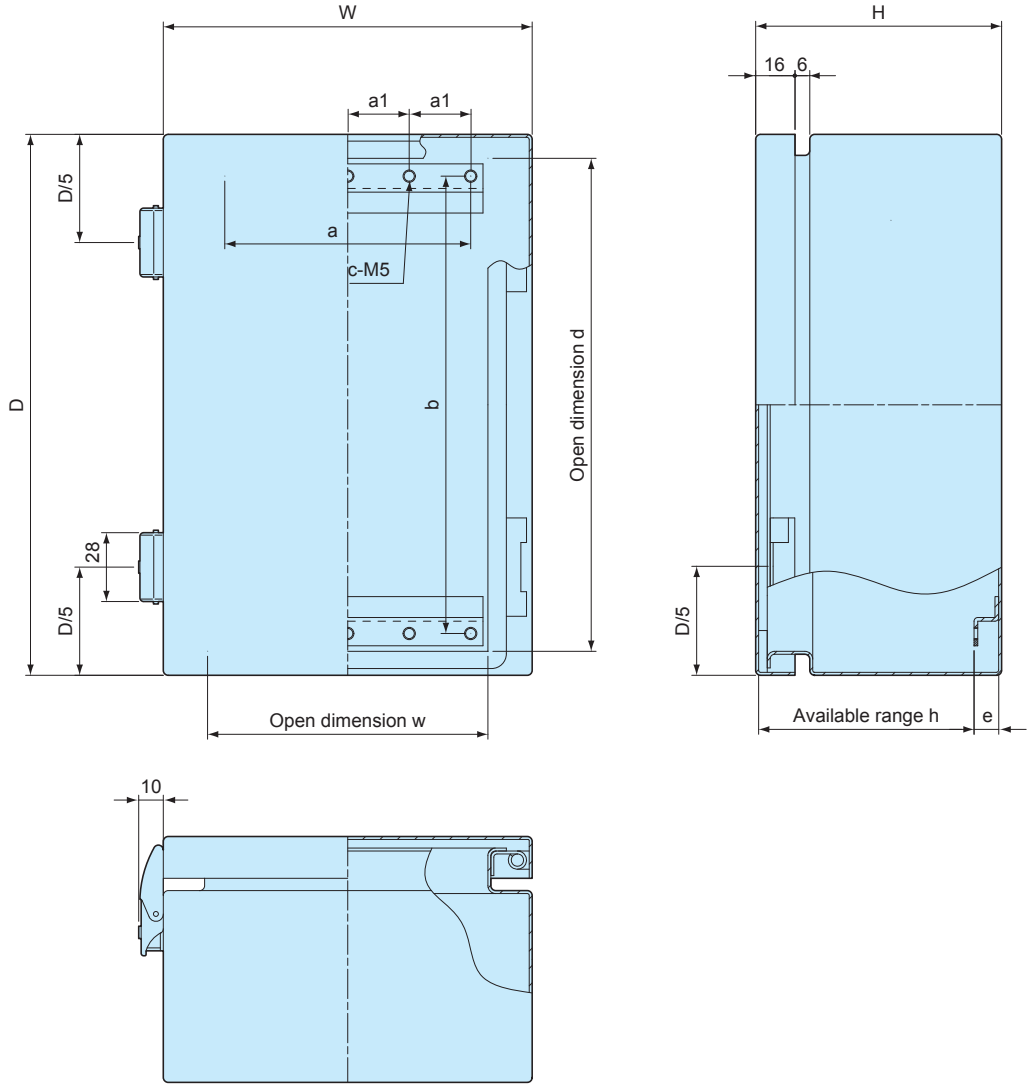

Product no. / Dimensions

Product no.	W	D	H	w	d	h	a	a1	b	c	e	Weight (kg)
SSM121508	120	150	80.5	84	130.5	68.1	66	33	116	6	10	1.0
SSM151508	150	150	80.5	114	130.5	68.1	96	24	116	10	10	1.2
SSM152206	150	220	60.5	114	200.5	51.6	96	24	186	10	6.5	1.4
SSM152210	150	220	100.5	114	200.5	88.1	96	24	186	10	10	1.7
SSM202010	200	200	100.5	164	180.5	88.1	146	36.5	166	10	10	1.9
SSM202806	200	280	60.5	164	260.5	51.6	146	36.5	246	10	6.5	2.0
SSM202812	200	280	120.5	164	260.5	108.1	146	36.5	246	10	10	2.6
SSM223312	220	330	120.5	184	310.5	108.1	166	41.5	296	10	10	3.0
SSM304015	300	400	150.5	264	380.5	138.1	246	61.5	366	10	10	4.8

SLB SERIES IP65 WALL MOUNT STAINLESS STEEL BOX - SCREWED

IP65

Conductive

Technical Data
Protection class: IP65 Operating temperature: -40°C ~ +90°C Recommended torque : 2N • m

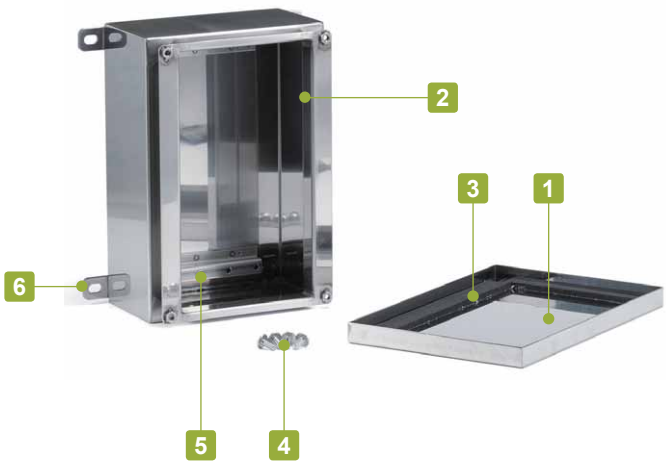

- IP65 wall mount enclosure, cover screw type.
- Made of stainless steel (SUS304) for superior weather and corrosion resistance.
- Conductive box for EMC shielding.
- Polished finish.
- Equipped with wall mounting bracket.

Components

No.	Part name	Pcs	Material	Color / Finish
1	Cover	1	Stainless steel SUS304 t = 1.2	Polished finish
2	Body	1	Stainless steel SUS304 t = 1.2	Polished finish
3	Gasket	1	EPDM	Black
4	Screw (M5-12 Truss head)	4	Stainless steel	Unfinished
5	Z-Mounting bracket	2	Stainless steel SUS304 t = 1.5	Unfinished
6	Wall mount bracket	4	Stainless steel SUS304 t = 2.0	Barrel finish

Accessories (Optional parts)

Mounting plate SSC series
See page SSC • FDR-1

DIN-Rail FDR series
See page SSC • FDR-1

Replacement gasket SSB-G series
See page SSM-G • SSB-G-1

Cable gland
See cable gland pages

SLB dimensions

■ Drawings below are reference examples only.
DXF/DWG/PDF drawings available on our website.

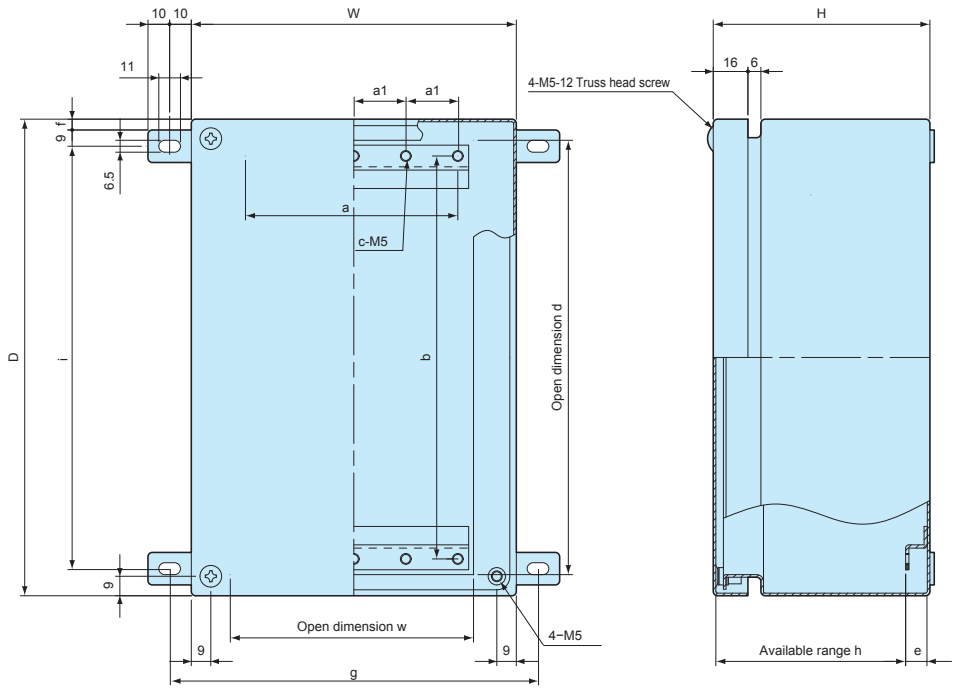

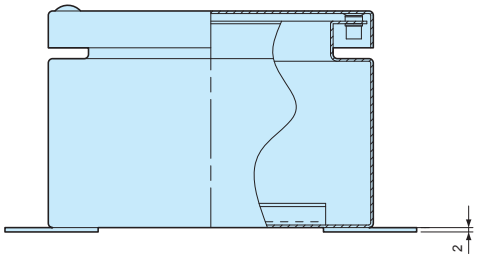

■ Wall mounting brackets are welded on.

Product no. / Dimensions

Product no.	W	D	H	w	d	h	a	a1	b	c	e	f	g	i	Weight (kg)
SLB121508	120	150	80	80.5	130.5	67.6	66	33	116	6	10	3.5	140	125	0.9
SLB151508	150	150	80	110.5	130.5	67.6	96	24	116	10	10	3.5	170	125	1.1
SLB152206	150	220	60	110.5	200.5	51.1	96	24	186	10	6.5	3.5	170	195	1.3
SLB152210	150	220	100	110.5	200.5	87.6	96	24	186	10	10	3.5	170	195	1.6
SLB202010	200	200	100	160.5	180.5	87.6	146	36.5	166	10	10	3.5	220	175	1.8
SLB202806	200	280	60	160.5	260.5	51.1	146	36.5	246	10	6.5	3.5	220	255	1.9
SLB202812	200	280	120	160.5	260.5	107.6	146	36.5	246	10	10	3.5	220	255	2.5
SLB223312	220	330	120	180.5	310.5	107	166	41.5	296	10	10	5	240	302	3.0
SLB304015	300	400	150	260.5	380.5	137	246	61.5	366	10	10	5	320	372	4.8

TAKACHI

SLM SERIES IP65 WALL MOUNT STAINLESS STEEL BOX - LATCH-HINGED

IP65

Conductive

Technical Data
Protection class: IP65 Operating temperature: -40°C ~ +90°C

- IP65 wall mount enclosure with easy open/close key latch/hinge.
- Made of stainless steel (SUS304) for superior weather and corrosion resistance.
- Conductive box for EMC shielding.
- Polished finish.
- Key latch for tamper-proof resistance
- Equipped with wall mounting brackets.

Components

No.	Part name	Pcs	Material	Color / Finish
1	Cover	1	Stainless steel SUS304 t = 1.2	Polished finish
2	Body	1	Stainless steel SUS304 t = 1.2	Polished finish
3	Hinge	2	Stainless steel SUS304 t = 1.2	Barrel finish
4	Gasket	1	EPDM	Black
5	Latch (with key)	2	Stainless steel SUS304 t = 1.2	Barrel finish
6	Z-Mounting bracket	2	Stainless steel SUS304 t = 1.5	Unfinished
7	Key	2	Steel SPCC	Nickel plated
8	Wall mount bracket	4	Stainless steel SUS304 t = 2.0	Barrel finish

Accessories (Optional parts)

Mounting plate SSC series
See page SSC • FDR-1

DIN-Rail FDR series
See page SSC • FDR-1

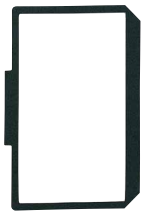

Replacement gasket SSM-G series
See page SSM-G • SSB-G-1

Cable gland
See cable gland pages

SLM dimensions

■ Drawings below are reference examples only.
DXF/DWG/PDF drawings available on our website.

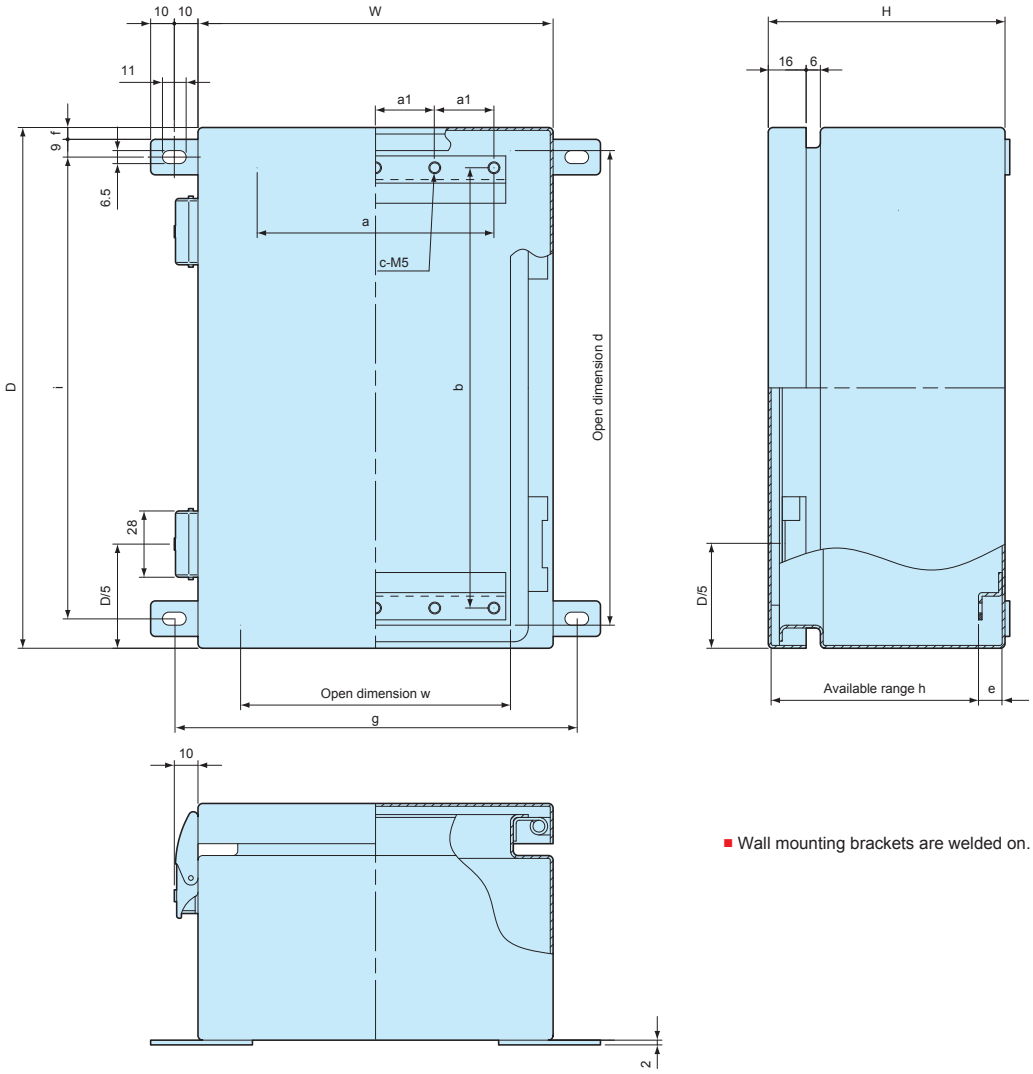

■ Wall mounting brackets are welded on.

Product no. / Dimensions

Product no.	W	D	H	w	d	h	a	a1	b	c	e	f	g	i	Weight (kg)
SLM121508	120	150	80.5	84	130.5	68.1	66	33	116	6	10	3.5	140	125	1.0
SLM151508	150	150	80.5	114	130.5	68.1	96	24	116	10	10	3.5	170	125	1.2
SLM152206	150	220	60.5	114	200.5	51.6	96	24	186	10	6.5	3.5	170	195	1.4
SLM152210	150	220	100.5	114	200.5	88.1	96	24	186	10	10	3.5	170	195	1.7
SLM202010	200	200	100.5	164	180.5	88.1	146	36.5	166	10	10	3.5	220	175	1.9
SLM202806	200	280	60.5	164	260.5	51.6	146	36.5	246	10	6.5	3.5	220	255	2.0
SLM202812	200	280	120.5	164	260.5	108.1	146	36.5	246	10	10	3.5	220	255	2.6
SLM223312	220	330	120.5	184	310.5	108.1	166	41.5	296	10	10	5	240	302	3.1
SLM304015	300	400	150.5	264	380.5	138.1	246	61.5	366	10	10	5	320	372	4.9

SSC SERIES MOUNTING PLATE for SSM • SLM • SSB • SLB

■ DXF/DWG/PDF drawings available on our website.

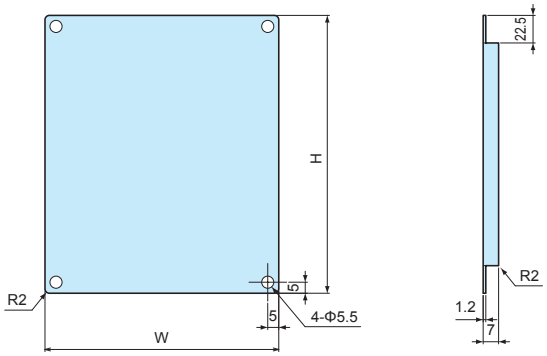

Product no. / Dimensions

Product no.	W	H	Suitable box
SSC1215	76	126	SSM • SLM • SSB • SLB 1215
SSC1515	106	126	SSM • SLM • SSB • SLB 1515
SSC1522	106	196	SSM • SLM • SSB • SLB 1522
SSC2020	156	176	SSM • SLM • SSB • SLB 2020
SSC2028	156	256	SSM • SLM • SSB • SLB 2028
SSC2233	176	306	SSM • SLM • SSB • SLB 2233
SSC3040	256	376	SSM • SLM • SSB • SLB 3040

■ Material / Finish : Steel SECC t = 1.2 / Zinc coated Included screws : M4-8 Pan head with spring washer / Trivalent chromate x 4 pcs

FDR SERIES DIN-RAIL

Product no. / Dimensions

Product no.	L	Suitable box
FDR- 128	128	SSM • SLM • SSB • SLB 1215 / 1515
FDR-B176	176	SSM • SLM • SSB • SLB 2020
FDR-B196	196	SSM • SLM • SSB • SLB 1522
FDR-B256	256	SSM • SLM • SSB • SLB 2028
FDR-B303	303	SSM • SLM • SSB • SLB 2233
FDR-B376	376	SSM • SLM • SSB • SLB 3040

■ Material / Finish : Extruded aluminium A6063S-T5 / Silver anodized

SSM-G SERIES GASKET for SSM • SLM

■ DXF/DWG/PDF drawings available on our website.

Product no. / Dimensions

Product no.	Suitable box
SSM-G1215	SSM • SLM 1215
SSM-G1515	SSM • SLM 1515
SSM-G1522	SSM • SLM 1522
SSM-G2020	SSM • SLM 2020
SSM-G2028	SSM • SLM 2028
SSM-G2233	SSM • SLM 2233
SSM-G3040	SSM • SLM 3040

■ Material : EPDM t = 5.0

SSB-G SERIES GASKET for SSB • SLB

■ DXF/DWG/PDF drawings available on our website.

Product no. / Dimensions

Product no.	Suitable box
SSB-G1215	SSB • SLB 1215
SSB-G1515	SSB • SLB 1515
SSB-G1522	SSB • SLB 1522
SSB-G2020	SSB • SLB 2020
SSB-G2028	SSB • SLB 2028
SSB-G2233	SSB • SLB 2233
SSB-G3040	SSB • SLB 3040

■ Material : EPDM t = 5.0

SSK SERIES POLE MOUNTING BRACKET

- Stainless steel pole mounting bracket.
- Welding onto stainless steel case can be performed to maintain waterproof ability.
- Use SSK-B series screws (see page SSK-M-2) for installation on diecast aluminium box.
- Use PKB mounting belt (see page PKB-1) for installation onto a pole.

SSK dimensions

■ DXF/DWG/PDF drawings available on our website.

SSK-S1

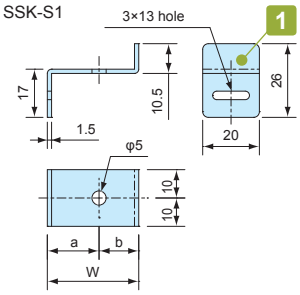

SSK-P50 • 60 • 75 • 80

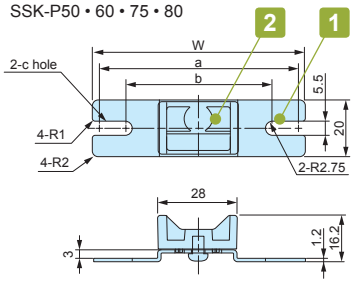

SSK-P100 • 120

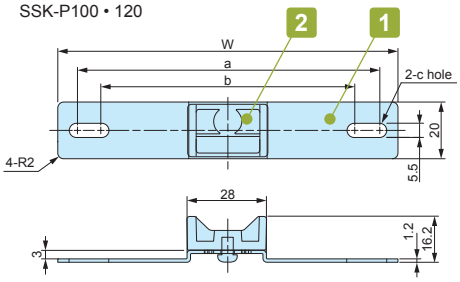

SSK-160 ~ 250

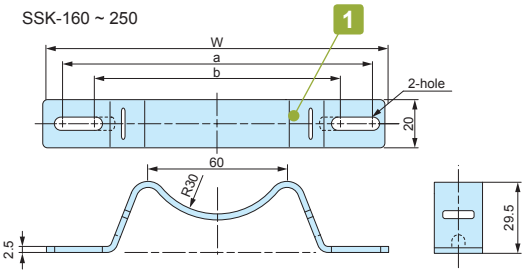

SSK-280 ~ 350

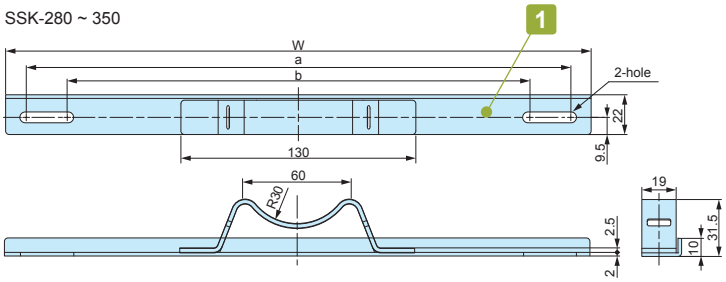

SSK-400

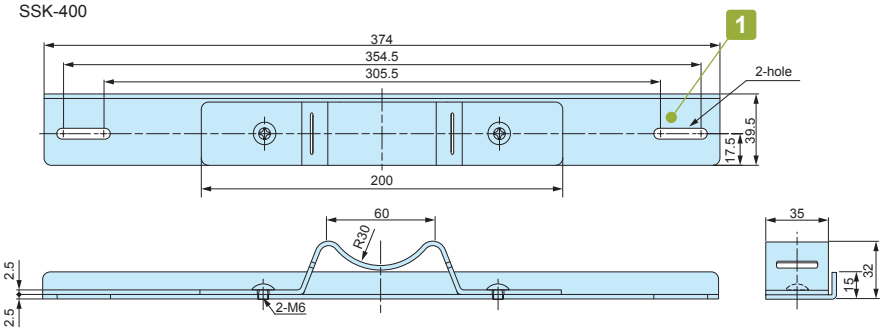

SSK-530

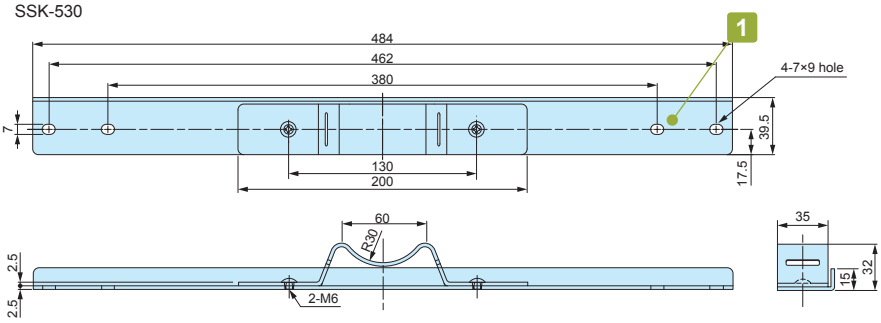

Components

No.	Part name	Pcs	Material	Color / Finish
1	Bracket	2	Stainless steel SUS304	Barrel finish
2	Mounting bracket (SSK-P models only)	2	ASA UL94HB	White gray

Product no. / Dimensions

Product no.	W	a	b	c	Suitable mounting belt	Pack of
SSK-S1	32.25	18.25	14	—	PKB-10PM, 10P, PKB-10S	4
SSK-P50	50	44.5	37.5	5.5× 9	PKB-10PM, 10P, PKB-10S	2
SSK-P60	60	54.5	47.5	5.5× 9	PKB-10PM, 10P, PKB-10S	2
SSK-P75	75	69.5	55.5	5.5×12.5	PKB-10PM, 10P, PKB-10S	2
SSK-P80	80	74.5	64.5	5.5×10.5	PKB-10PM, 10P, PKB-10S	2
SSK-P100	100	88.1	76.5	5.5×11.3	PKB-10PM, 10P, PKB-10S	2
SSK-P120	120	106.5	88.5	5.5×14.5	PKB-10PM, 10P, PKB-10S	2
SSK-160	142	129.5	106.5	–	PKB-10PM, 10P, PKB-10S	2
SSK-170	152	142.3	101	–	PKB-10PM, 10P, PKB-10S	2
SSK-200	174	161.5	112.5	–	PKB-10PM, 10P, PKB-10S	2
SSK-210	192	180.5	131.5	–	PKB-10PM, 10P, PKB-10S	2
SSK-250	230	215.5	166.5	–	PKB-10PM, 10P, PKB-10S	2
SSK-280	260	244.5	195.5	–	PKB-10PM, 10P, PKB-10S	2
SSK-300	280	264.5	215.5	–	PKB-10PM, 10P, PKB-10S	2
SSK-350	324	302.5	253.5	–	PKB-10PM, 10P, PKB-10S	2
SSK-400	374	354.5	305.5	–	PKB-20S	2
SSK-530	484	462	380	7×9	PKB-20S	2

SSK-B SERIES MOUNTING SCREW SET for SSK

- Mounting screw set for use with SSK pole mounting bracket.
- See below chart for appropriate screw / box combination.
- Material / Finish : Stainless steel / Unfinished.

Product no. / Dimensions

Product no.	Included screws	Suitable box	Pcs
SSK-B4-15N	M4-15 Pan head with nut	AW5-4-7 ~ AW8-5-18	4
SSK-B4-25N	M4-25 Pan head with nut	BDN9-9-6, BDN10-14-7	4
SSK-B5-8T	M5-8 Binding head tapping	HQ series	4
SSK-B5-15N	M5-15 Pan head with nut	AW9-9-10 ~ AW21-9-31	4
SSK-B5-25N	M5-25 Pan head with nut	BDN12-22-8, BDN16-26-9	4

- Installation Example

M5 thread fastening

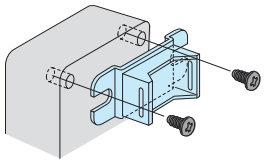

SSK-B5-8T

M4/M5 Pan head with nut fastening

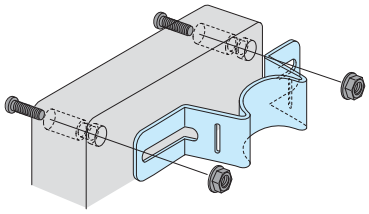

SSK-B4-15N SSK-B4-25N
SSK-B5-15N SSK-B5-25N
SSK-B5-35N SSK-B6-40N

POLE MOUNTING BRACKET / SCREW SET MATCHING CHART

BDN series

Box Product no.		SSK Product no.		Screw set Product no.
		Vertical mount	Horizontal mount	
BDN	9-9-6	SSK-P75	SSK-P100	SSK-B4-25-N
	10-14-7	SSK-P80	SSK-160	SSK-B4-25-N
	12-22-8	SSK-P100	SSK-250	SSK-B5-25-N
	16-26-9	SSK-160	SSK-280	SSK-B5-25-N

HQ series

Box Product no.		SSK Product no.		Screw set Product no.
		Vertical mount	Horizontal mount	
HQ	10-10-5 • 10-10-7	SSK-P50	–	SSK-B5-8T
	15-10-5 • 15-10-8	SSK-P80	SSK-160	SSK-B5-8T
	15-11-3	SSK-P100	SSK-160	SSK-B5-8T
	16-16-6 • 16-16-8	SSK-170	SSK-170	SSK-B5-8T
	19-10-5 • 19-10-7	–	SSK-200	SSK-B5-8T
	20-15-3 • 20-15-5 • 20-15-9	SSK-160	SSK-210	SSK-B5-8T
	26-18-6	SSK-200	SSK-280	SSK-B5-8T
	27-17-7 • 27-17-10	SSK-170	SSK-280	SSK-B5-8T

SSM • SSB series

■ Installation should be done by welding.

Box Product no.				SSK Product no.	
				Vertical mount	Horizontal mount
SSM SSB	121508			SSK-S1	–
	151508	152206	152210	SSK-160	–
	202010	202806		SSK-210	–
	202812	223312			
	304015			SSK-300	–

■ SSK bracket is different depending on mount type (Vertical or Horizontal).

Vertical mount
(Longer vertical side)

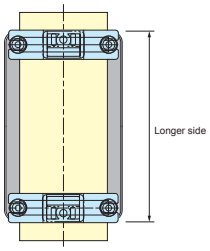

Horizontal mount
(Longer horizontal side)

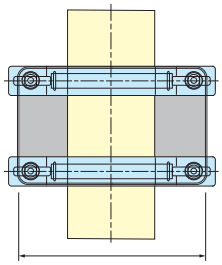

AW series

Box Product no.		SSK Product no.		Screw set Product no.
		Vertical mount	Horizontal mount	
AW	5-4-7	–	SSK-P100	SSK-B4-15N
	5-4-9	–	SSK-P120	SSK-B4-15N
	5-4-11	–	SSK-160	SSK-B4-15N
	5-4-14	–	SSK-200	SSK-B4-15N
	7-7-8	SSK-P50	SSK-P120	SSK-B4-15N
	7-7-11	SSK-P50	SSK-160	SSK-B4-15N
	7-7-15	SSK-P50	SSK-210	SSK-B4-15N
	7-7-20	SSK-P50	SSK-250	SSK-B4-15N
	7-7-25	SSK-P50	SSK-300	SSK-B4-15N
	8-5-9	SSK-P75	SSK-160	SSK-B4-15N
	8-5-12	SSK-P75	SSK-160	SSK-B4-15N
	8-5-14	SSK-P75	SSK-200	SSK-B4-15N
	8-5-18	SSK-P75	SSK-250	SSK-B4-15N
	9-9-10	SSK-P75	SSK-160	SSK-B5-15N
	9-9-13	SSK-P75	SSK-170	SSK-B5-15N
	9-9-17	SSK-P75	SSK-250	SSK-B5-15N
	9-9-22	SSK-P75	SSK-280	SSK-B5-15N
	9-9-28	SSK-P75	SSK-350	SSK-B5-15N
	11-6-11	SSK-P100	SSK-160	SSK-B5-15N
	11-6-15	SSK-P100	SSK-210	SSK-B5-15N
	11-6-19	SSK-P100	SSK-250	SSK-B5-15N
	11-6-24	SSK-P100	SSK-300	SSK-B5-15N
	12-8-11	SSK-P120	SSK-160	SSK-B5-15N
	12-8-14	SSK-P120	SSK-200	SSK-B5-15N
	12-8-17	SSK-P120	SSK-250	SSK-B5-15N
	12-8-22	SSK-P120	SSK-280	SSK-B5-15N
	16-9-14	SSK-160	SSK-200	SSK-B5-15N
	16-9-18	SSK-160	SSK-250	SSK-B5-15N
	16-9-23	SSK-160	SSK-280	SSK-B5-15N
	16-9-28	SSK-160	SSK-350	SSK-B5-15N
	21-9-17	SSK-210	SSK-250	SSK-B5-15N
	21-9-21	SSK-210	SSK-280	SSK-B5-15N
	21-9-26	SSK-210	SSK-350	SSK-B5-15N
	21-9-31	SSK-210	SSK-400	SSK-B5-15N

PKB series POLE MOUNTING BELT

PKB−10PM, 10P

PKB−10S, 20S

- Pole mounting belt for attachment of enclosures with suitable pole mount brackets or construction onto poles.
- Designed for one time use only (not reusable).
- Strong stainless steel clamping type and easy installation plastic type are available.

PKB dimensions

- DXF/DWG/PDF drawings available on our website.

PKB-10PM, 10P

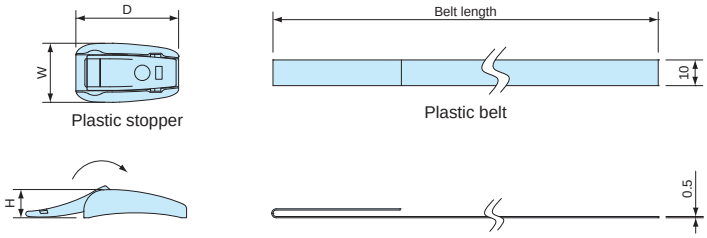

PKB-10S

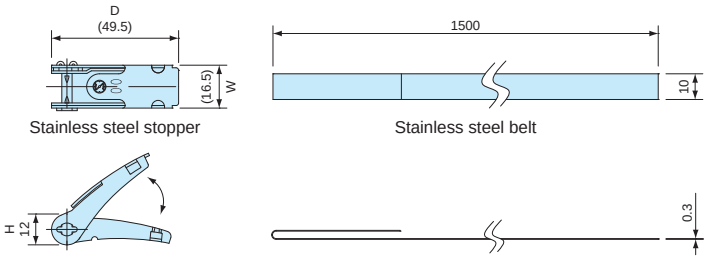

PKB-20S

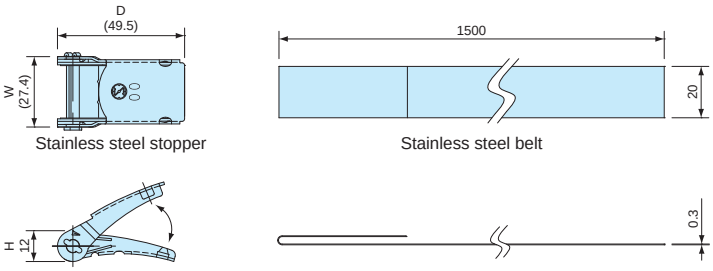

Components

No.	Part name	Material	Color / Finish
1	Stopper	Stainless steel SUS304 • POM	Barrel finish • Black
2	Belt	Stainless steel SUS430 • PET	Bright annealed finish • Gray

Product no. / Dimensions

Product no.	W	D	H	Belt length	Belt material	Tensile strength (horizontal)	Weight (g)	Pack of
PKB-10PM	24	23	11	500 mm	PET	0.8kN	14	2
PKB-10PM	23	40	11	1,500 mm	PET	1.3kN	31.8	2
PKB-10S	16.5	49.5	12	1,500 mm	Stainless steel SUS304	1.4kN	101.6	2
PKB-20S	27.4	49.5	12	1,500 mm	Stainless steel SUS430	2.9kN	182.2	2

AGE SERIES EMC SHIELDED CABLE GLAND

- Optimal contact spring provides excellent shield contact and the smallest possible transfer impedance.
- Clawed lock nut makes a good EMC shield contact possible on conductive enclosures.
- Shape of the contact spring not only allows for a large clamping range to the shield but also enables easy and faster installation and re-installation.
- 2-piece detachable sealing inserts can be adapted to the wider existing cable diameter on site.
  (AGE12 available only with 1-piece sealing insert)

Technical Data

Protection class : IP68 2bar / 30min, IP69K
20m depth immersion in 30 minutes
Operating temperature : -60°C ~ +100°C
Compliant with IEC62444 Var. A

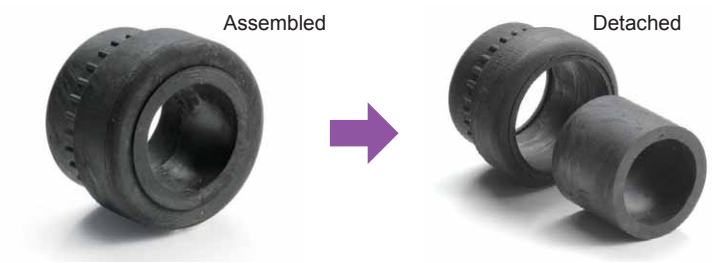

Cable Range

No.	Sealing insert type	
	Assembled	Detached
AGE16-10.5	Φ 6 ~ Φ 7.5	Φ 7.5 ~ Φ10.5
AGE20-15	Φ 8 ~ Φ10.5	Φ10.5 ~ Φ15
AGE25-20	Φ12.5 ~ Φ15	Φ15 ~ Φ20
AGE32-25	Φ17 ~ Φ20	Φ20 ~ Φ25

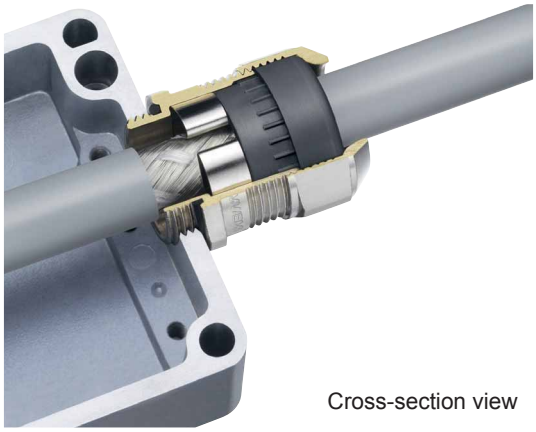

Cross-section view

Components

No.	Part name	Material	Color / Finish
1	Cap	Brass	Nickel plated
2	Sealing insert	TPE	Black
3	Connector	Brass	Nickel plated
4	Contact spring	Stainless steel	Unfinished
-	O-Ring	NBR	Black
5	Lock-nut	Brass	Nickel plated

INSTALLATION Instruction

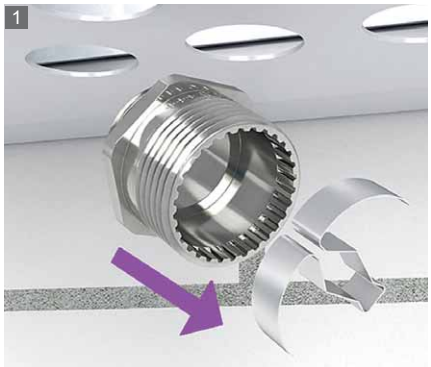

Remove the contact spring from the connector.

Install the connector onto the enclosure.

Strip the cable.

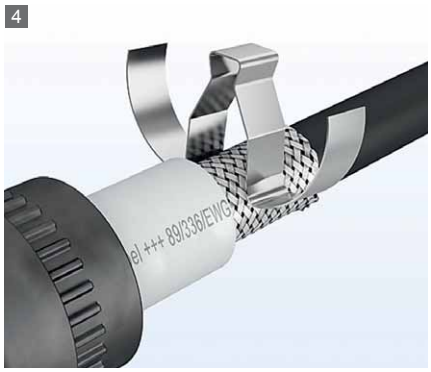

Clip the contact spring on the shielded cable.

Pass the cable through the Sealing insert and cap.

Tighten the cap to complete.

AGE dimensions

■ DXF/DWG/PDF drawings available on our website.

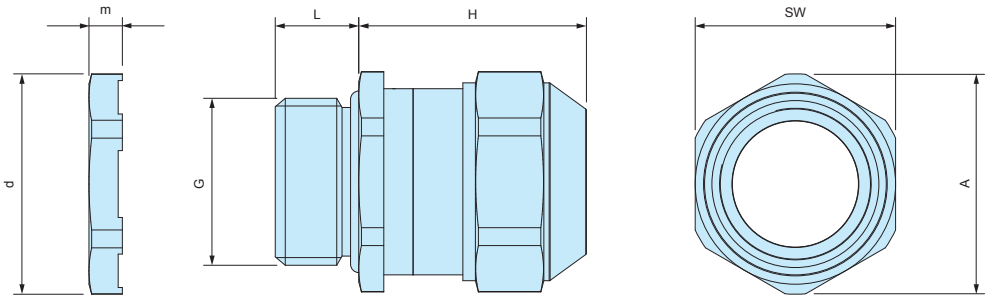

Product no. / Dimensions

Product no.	G		Cable range		L	H Max	SW	A	d	m	Pack of
	Thread size	Mounting hole	Min	Max							
AGE12-5	M12×1.5	Φ12.2	3.5	5.0	10	22	15	16.5	16.5	3.5	1
AGE12-6.5	M12×1.5	Φ12.2	5.0	6.5	10	22	15	16.5	16.5	3.5	1
AGE16-10.5	M16×1.5	Φ16.2	6.0	10.5	10	25	18	20	21	3.5	1
AGE20-15	M20×1.5	Φ20.2	8.0	15.0	10	27	24	26.5	26.5	4	1
AGE25-20	M25×1.5	Φ25.2	12.5	20.0	11	33	30	33	33	4	1
AGE32-25	M32×1.5	Φ32.3	17.0	25.0	13	34	36	39.5	39.5	5	1

EV3-5S CONDUCTIVE SCREW

Conductive

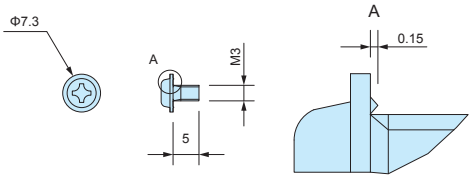

- When tightened, protrusions on the underside of the screw head will shave away at painted or anodized surface to expose the base material for achieving conductivity.

Product no. / Dimensions

Product no.	M	L	Material	Finish	Pack of
EV3-5S	3	5	Steel	Nickel plated	20