MSM SERIES RACK MOUNT BRACKET

Components

Material	Color / Finish
Extruded aluminium A6063S-T5	Gray • Black / Painted

Included screws : M5-10 Flat head x 4 pcs / Black trivalent chromate + Nut x 4 pcs

Color Type

Color code	Material	Color / Finish
G	Extruded aluminium A6063S-T5	Gray / Painted
B	Extruded aluminium A6063S-T5	Black / Painted

Product no. / Dimensions

Product no.	h (Enclosure H)	a	Pack of
MSM- 88□	88	76.2	2
MSM-133□	132.5	57.1	2
MSM-177□	177	101.6	2
MSM-222□	221.5	146	2

■ Please suffix color code at the end of the product number.

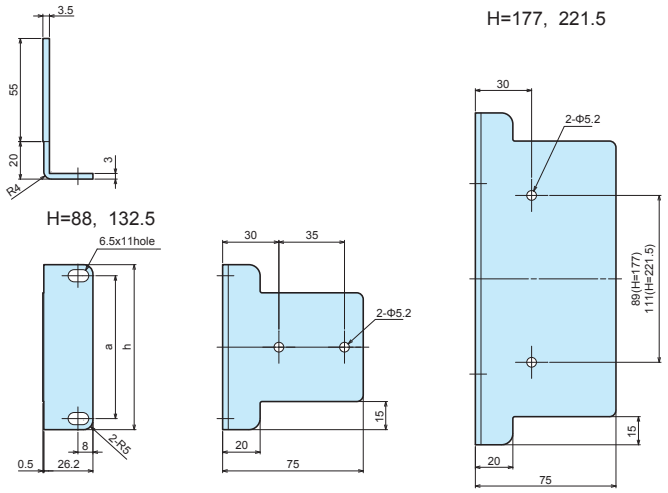

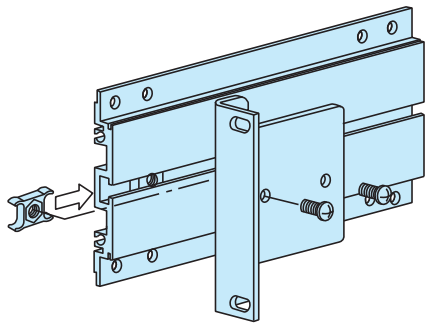

MZ SERIES SIDE FRAME NUT

■ Side frame nut for MS • MSN • MSY • MSR • MO • MON • MOY • MOR series.

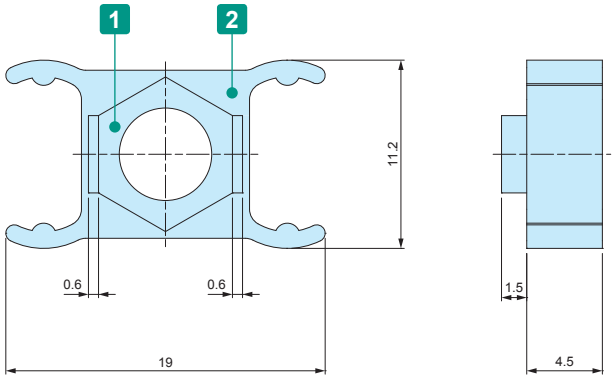

Components

No.	Part name	Material	Color / Finish
1	Nut	Brass • Steel	Nickel plated
2	Holder	Polyethylene	Black

Product no. / Feature

Product no.	Screw size	Nut material	Pack of
MZ-4	M4	Brass	10
MZ-5	M5	Steel	10